PATENT PROFILES

BIOTECHNOLOGY : 1982 UPDATE

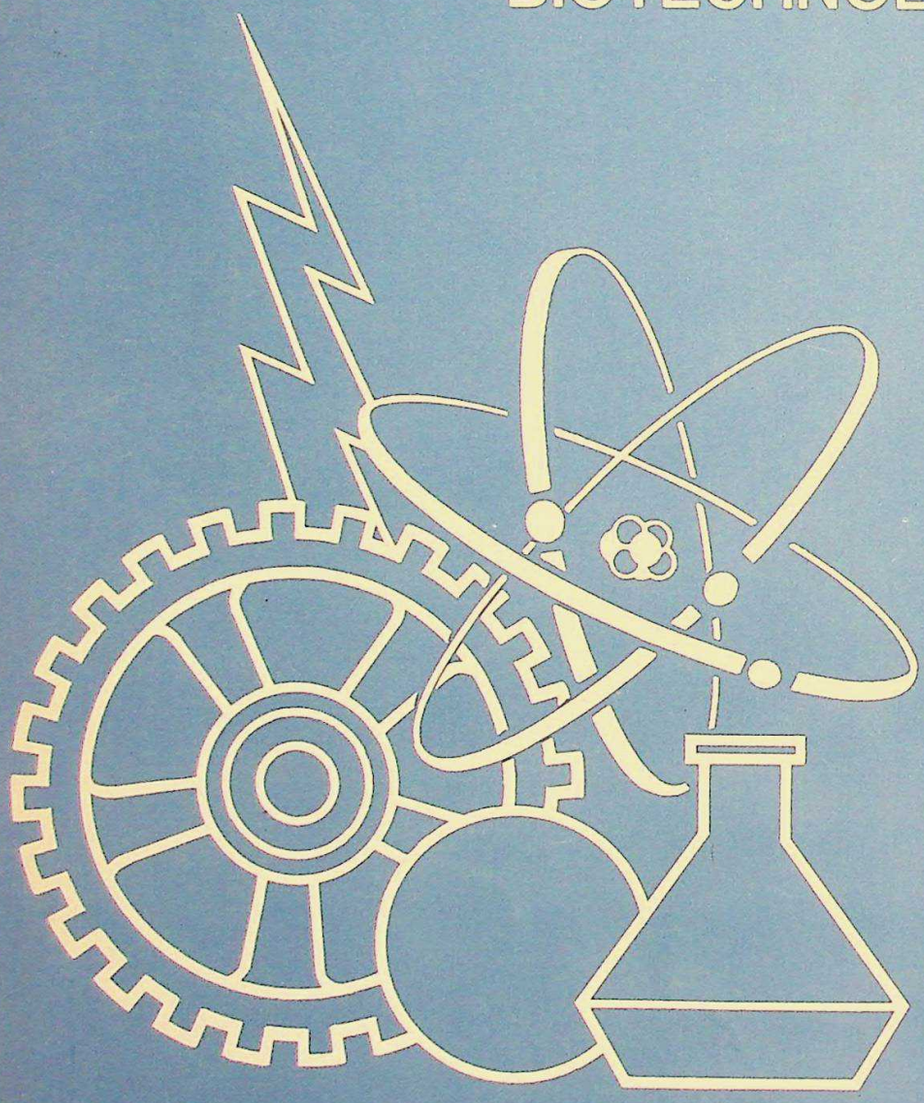

BIOTECHNOLOGY : 1982 UPDATE

PATENT PROFILES

a 1983 publication from the –

OFFICE OF TECHNOLOGY
ASSESSMENT AND FORECAST

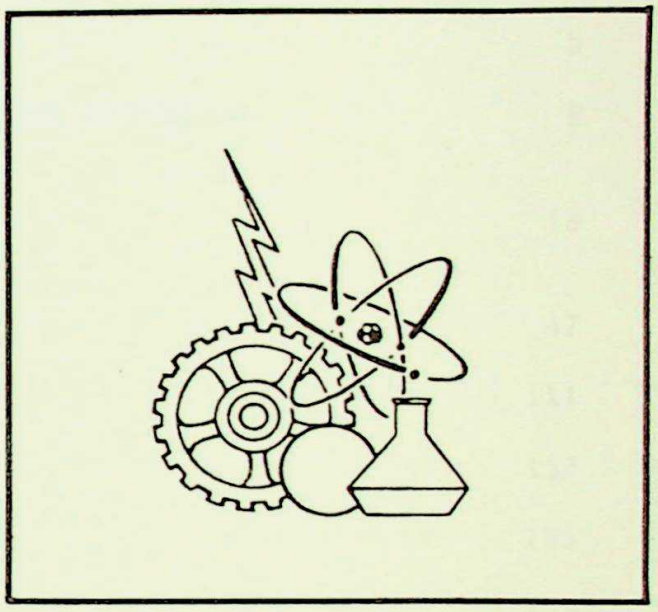

U.S. DEPARTMENT OF COMMERCE

Malcolm Baldrige, Secretary

Patent and Trademark Office

Gerald J. Mossinghoff, Commissioner

Office of Technology Assessment and Forecast

John F. Terapane, Director

First published: July, 1982
Reprinted with additional data: September, 1983

TABLE OF CONTENTS

	Page
INTRODUCTION	1
EXPLANATION OF DATA AND FORMAT	5
LEGAL DECISIONS AFFECTING BIOTECHNOLOGY PATENTING	9
PROFILES	
MUTATION/GENETIC ENGINEERING	13
ENZYMES PER SE	47
IMMOBILIZED ENZYMES	111
TISSUE CULTURE	157
STARCH HYDROLYSATES	185
AMINO ACIDS	211
1982 UPDATE	237
APPENDIX A - EXPLANATORY NOTES	279
APPENDIX B - PUBLICATIONS BY THE OFFICE OF TECHNOLOGY ASSESSMENT AND FORECAST	283
APPENDIX C - CUSTOM PATENT REPORTS FROM THE OFFICE OF TECHNOLOGY ASSESSMENT AND FORECAST	289
APPENDIX D - ACKNOWLEDGMENTS	297

INTRODUCTION

Background

The patent system has long been recognized as an incentive for innovation in the U.S. free-enterprise system. Often overlooked, however, is a second great benefit of the patent system: the enormous, continually expanding patent file. This file includes more than four million distinct U.S. patents. These patents are classified and cross-referenced among the approximately 113,000 categories of technology that make up the U.S. Patent Classification System. Along with similarly categorized foreign patents and other technical publications, they make up a collection totaling over 25 million documents -- a collection which grows by over half a million documents annually.

Patent law requirements for a full disclosure of the invention (which is then published as part of a patent grant) have resulted in a unique assemblage of technological information. The patent file embodies the most comprehensive collection of technical information of its kind in the world. This information is presented in a manner such that nearly every significant development in almost all technical fields flows in a natural time-series sequence. It virtually welcomes monitoring and analysis.

In its own unique way, this file represents a national resource. The Patent and Trademark Office (PTO) recognizes the heavy responsibilities not only to preserve, maintain, and improve the file, but, as well, to maximize its use for the greatest public benefit. As part of the effort to discharge this latter responsibility, the PTO established its technology assessment and forecast program in 1971.

In its most general terms, the mission of the program is to stimulate and enhance the use and usability of the patent file and to assemble, analyze and make available meaningful data about the file. In carrying out this mission, the Office of Technology Assessment and Forecast (OTAF), which administers the program, has assembled and built a master data base covering all U.S. patents. This data base has been used to support the preparation of OTAF publications (see Appendix B) and OTAF's custom report services (see Appendix C).

PATENT PROFILES

In an effort to continually provide data in a form which is useful and convenient for the interested reader, OTAF initiated a new publication series in December 1979 -- PATENT PROFILES. Each publication deals with a specific technological area, and for a given period of time surveys the patent activity of that area.

PATENT PROFILES provides many different kinds of information about a particular area of the patent file and assembles this information in a format which enables the user to easily extract the information needed.

Thus, interested users, both technically and non-technically oriented, from the public and private sectors will be able to gain insight into the who, what and where of the patent activity in a technology and, perhaps, be able to discern the direction in which the technology is headed.

The objective of these publications is to increase the awareness and use of the U.S. patent file as a prime technological information resource so that the file may contribute more fully to the knowledge from which future inventors and innovators draw and upon which corporate and public policy planners rely.

About This Publication

PATENT PROFILES - Biotechnology was published in July 1982. It included statistics for patent activity from January 1963 through December 1981, and the front pages of patents published from January 1 - June 1, 1982. In response to requests for updated statistics and additional copies of the publication, OTAF presents this revised edition. PATENT PROFILES - Biotechnology: 1982 Update contains all of the information that was in the first edition.* It also has a new section -- "1982 UPDATE" -- with data about the origin and ownership of patents granted during 1982 and statistical summaries of the patent activity from 1963-1982.

"Biotechnology" refers to the wide variety of industrial processes which involve biological systems. It includes the agricultural and fermentation industries, which for centuries have used microorganisms in the production of foods and alcoholic beverages. The pharmaceutical industry, which for many years used microorganisms to produce desired products, has recently begun to benefit from major technical advances in genetic manipulation. Mining, agriculture, oil recovery and pollution control are but a few of the industries which will be influenced as the use of custom-designed microorganisms increases.

This publication does not attempt to include all aspects of the technology. Instead, it focuses on six particular areas of the U.S. patent file which relate to enzymes and microorganisms, their use in the synthesis of certain products, and their preparation or modification.

Mutation/Genetic Engineering, an emerging technology in its own right, is an area within Biotechnology which will ultimately impact on many industries by allowing man to carry out processes which were previously impossible or impractical. The lure of increased profits due to decreasing costs, fewer pollutants, and decreased energy use contributes to its popularity. **Genetic Engineering** refers to laboratory processes which are

---

*Please note that the Explanation of Data and Format was not revised to include 1982 data.

used to alter the hereditary apparatus of a living cell. The altered cells are then used in industrial processes to produce more or different chemicals or to perform completely new functions.*

An increase in the U.S. patent activity in the area of **Mutation/Genetic Engineering** may be attributed to changes in PTO policy in view of the Supreme Court decision of Diamond v. Chakrabarty in 1980.** Prior to the decision, the PTO had not allowed patent claims drawn to live microorganisms. Many applications containing such claims were held in suspension pending the decision. This practice, which resulted in a delay in the issuance of U.S. patents, may have also fostered a reluctance to file patent applications in the United States. Therefore, as a complement to the profile of U.S. patent activity, the **Mutation/Genetic Engineering** section also includes a listing of selected foreign patent documents which were published between August 1980 and March 1982. The listing includes the publication date, assignee or inventor, and a brief description of the subject matter.

Enzymes have been described as the basic tools of Biotechnology. They function as regenerative catalysts which permit the use of milder reaction conditions to produce desired products in an environmentally safe manner. **Immobilized Enzymes,** i.e., those bound to a carrier, offer additional economic advantages. They are more stable when exposed to changes in reaction conditions, and binding the enzymes often makes them insoluble. These factors ensure that reclamation of these expensive materials is more easily accomplished.

Tissue Culture refers to processes and apparatus which permit the growth and maintenance of cell lines. The techniques are of extreme importance in medical fields where they are used to produce vaccines, steroids, antibodies, and skin and organ transplant materials.

The expression **"Starch Hydrolysates"** is used in this publication to refer to processes using enzymes or microorganisms to produce monosaccharides. An example of such a process is the hydrolysis of starch to sugar. The profitable production of high fructose corn syrup using immobilized enzymes, instead of acid hydrolysis, is another example which illustrates the commercial benefits of such processes.

Amino Acids, the building blocks of protein, are also useful as food supplements. They may be produced from low cost carbohydrate and hydrocarbon feedstocks by the use of microorganisms and enzymes. These biological processes have advantages over chemical processes in that desirable or active forms of the compounds are produced.

---

*Office of Technology Assessment, U.S. Congress, Impacts of Applied Genetics: Micro-Organisms, Plants, and Animals, (Washington, DC.: Government Printing Office, 1981). p. ix.

**See the discussion of legal decisions affecting Biotechnology patenting, page 9.

EXPLANATION OF DATA AND FORMAT

This report presents profiles of patenting* in 6 areas of Biotechnology. Each of the profiles is divided into six parts (1, 2A, 2B, 2C, 2D, 3):

Part 1 - Activity Summary

Part 1, the first page of each profile, identifies the area which is examined, lists the pertinent U.S. Patent Classification(s) involved, and graphically illustrates patent activity (across a designated 10-year span) in two ways: (1) by the patent grant date; (2) by the granted patents' application filing date. The latter method presents what is often considered a more useful measurement tool since application filing dates are closer in time to the actual development of the technology disclosed in the patent and are independent of PTO production variance.** The relative growth in the particular technological area, as well as levels of involvement by foreign residents, corporations, and government agencies, expressed as a percentage of recent U.S. patent activity, are presented in the "Activity Indices" (defined below).

EXAMPLE

IMMOBILIZED ENZYMES

This profile includes immobilized or carrier-bound enzymes or microbial cells and processes for preparing them. Immobilization results when the enzyme or microbial cell is covalently or ionically bonded to a carrier or entrapped within a carrier. The carrier material physically confines the enzyme or microbial cell during a continuous process or enhances recoverability in a batch process. Examples of immobilized enzymes are enzymes chemically or physically bonded to a water-insoluble matrix, enzymes contained within a polymer or gel, and enzymes adsorbed on a resin.

INCLUDED IN THIS PROFILE ARE ALL OF THE PATENTS FROM:

Class 435, Subclasses 174-182

ACTIVITY INDICES (1979-1981)

GROWTH	33.2%
FOREIGN SHARE	54.2%
CORPORATE OWNED	91.0%
GOVERNMENT OWNED	5.2%
U.S. OWNED OF FOREIGN	11.9%

PATENT ACTIVITY

BY PATENT GRANT DATE
1972-1981

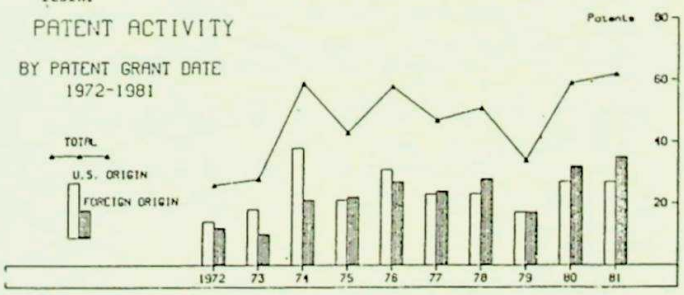

BY APPLICATION FILING DATE
1970-1979

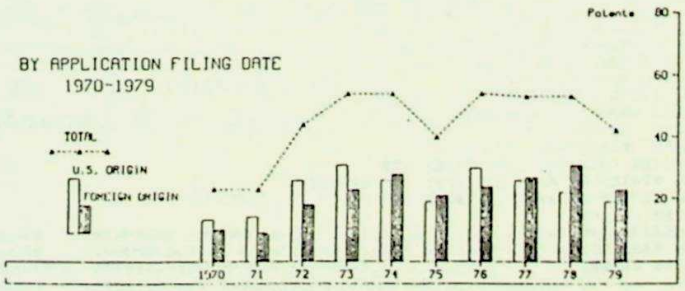

U.S. PATENT CLASSIFICATION

SCOPE OF TECHNOLOGY

ACTIVITY INDICES - DEFINED

% GROWTH: the number of patents issued in the period 1979-1981 divided by the total number of patents in the period 1972-1981. (Average for all technologies = 26.1%)

% FOREIGN: the number of patents issued to residents of foreign countries in the period 1979-1981 divided by total number of patents issued in this period. (Average for all technologies = 39.6%)

% CORPORATE OWNED: the number of 1979-1981 patents assigned at time of issue to U.S. or foreign non-government organizations -- mainly corporations -- divided by the total number of patents issued in this period. (Average for all technologies = 75.7%)

% GOVERNMENT OWNED: the number of 1979-1981 patents assigned at time of issue to the U.S. or a foreign government divided by total number of patents issued in this period. (Average for all technologies = 2.4%)

% U.S. OWNED OF FOREIGN: the number of 1979-1981 patents with a foreign resident inventor that are assigned to a U.S. organization, divided by the number of patents with a foreign resident inventor in these years. (Average for all technologies = 7.3%)

---

* U.S. Patents only

**See further explanation in Appendix A.

Part 2A - Patent Activity by Date

Part 2A of each profile shows in tabular form the data relied upon in constructing the charts in Part 1. The first table shows the yearly distribution of patents by the date of the patent grant, while the second table redistributes these data based on the application filing date of the patents. The usefulness of this latter data distribution is mentioned in the explanation of Part 1, and further detailed in Appendix A.

EXAMPLE

IMMOBILIZED ENZYMES - PART 2A

PATENT ACTIVITY (1/63-12/81) BY DATE OF PATENT GRANT

	NUMBER OF PATENTS									
	63-67	1968	1969	1970	1971	1972	1973	1974	1975	1976
TOTAL	12	1	2	6	14	26	28	59	43	58
U.S. ORIGIN	6	1	2	6	9	14	18	38	21	31
FOREIGN ORIGIN	6				5	12	10	21	22	27
JAPAN	2					1	2	3	7	11
WEST GERMANY	1				1		3	3	2	4
UNITED KINGDOM					3	4	2	7	8	1
FRANCE								2		2
SWEDEN						1	1	4	1	2
SWITZERLAND						1		1		1
ISRAEL	2				1	3			1	1
DENMARK									1	1
NETHERLANDS						1	1	1	1	
CZECHOSLOVAKIA	1									1
ITALY							1			1
AUSTRALIA						1				1
CANADA										
BELGIUM										
HUNGARY									1	
AUSTRIA										1
U.S. ORIGIN	6	1	2	6	9	14	18	38	21	31
U.S. CORP. OWNED	4	1	1	4	9	12	14	34	19	29
U.S. GOVT. OWNED						1	3	1	1	1
U.S. INDIV. OWNED	2			1		1		3	1	1
FOREIGN OWNED			1	1			1			
FOREIGN ORIGIN	6				5	12	10	21	22	27
U.S. OWNED					1	4			1	2
FOREIGN OWNED	6				4	8	10	21	21	25
FOREIGN CORP.	3				4	8	8	20	19	19
FOREIGN GOVT.										2
FOREIGN INDIV.	3						2	1	2	4

Part 2B - Organizational Patenting - Ranked

Part 2B of each profile provides a list of assignees* ranked by the number of patents, in the technology, to which they held title at the time of the patent grant. The listing is limited by designation of a "cut-off" number (e.g., "2 or more patents"). This list identifies the assignees (mostly corporations), which received the most patents in the profiled technology during 1969-1981.

EXAMPLE

STARCH HYDROLYSATES

NO. OF PATENTS	ASSIGNEES WITH 2 OR MORE PATENTS (1969-1981)
47	CPC INTERNATIONAL INC.
23	HAYASHIBARA CO.
21	STANDARD BRANDS INC.
18	A. E. STALEY MANUFACTURING CO.
8	R. J. REYNOLDS TOBACCO CO.
7	AGENCE NATIONALE DE VALORISATION DE LA RECHERCHE (ANVAR)
7	ANHEUSER-BUSCH, INC.
5	NOVO INDUSTRI A/S
5	MILES LABORATORIES INC.
4	KYOWA HAKKO KOGYO CO., LTD.
4	CORNING GLASS WORKS
4	HAYASHIBARA BIOCHEMICAL LABS. INC.
4	MONSANTO CO.
4	PENICK + FORD LTD.
3	GLAXO LABORATORIES LTD.
3	TANABE SEIYAKU CO. LTD.
3	TAKEDA CHEMICAL INDUSTRIES LTD.
3	CHEVRON RESEARCH CO.
3	BAXTER TRAVENOL LABS., INC.
3	IMPERIAL CHEMICAL INDUSTRIES LTD.
3	HAYASHIBARA SEIBUTSU KAGAKU KENKYUJO K.K.
3	NATIONAL DISTILLERS AND CHEMICAL CORP.
3	GRAIN PROCESSING CORPORATION
3	MEIJI SEIKA KAISHA LTD.
3	PURDUE RESEARCH FOUNDATION
2	GREAT WESTERN SUGAR CO.
2	DENKI KAGAKU KOGYO K.K.
2	BAYER AKTIENGESELLSCHAFT
2	BATTELLE MEMORIAL INSTITUTE
2	RESEARCH CORPORATION
2	RIKAGAKU, KENKYUSHO
2	MITSUBISHI CHEMICAL INDUSTRIES LTD.
2	UNITED STATES OF AMERICA (DEPT. OF ENERGY)
2	UNITED STATES OF AMERICA (ARMY)
2	DOW CHEMICAL CO.
2	ICI AMERICAS INC.
2	ROHM + HAAS CO.
2	ROQUETTE FRERES

---

*See definition in Appendix A.

Part 2C - Organizational Patenting - Alpha Listing

Part 2C of each profile also covers assigned patenting during the period 1969-1981. Assignees are listed alphabetically followed by a numerical listing of their patents with titles.

This section provides valuable information to potential entrepreneurs, competitors and those in need of technological know-how by identifying corporate actors in the field. Inclusion of patent titles further defines the subject technology.

EXAMPLE

```
IMMOBILIZED ENZYMES - PART 2C

                    ORGANIZATIONAL PATENTING (1/69-12/81) - - ALPHA LISTING

ABBOTT LABORATORIES
  4070246  -  REACTIVE MATRICES

AB STADEX
  3996107  -  ENZYMATIC PRODUCTION OF A STARCH CONVERSION PRODUCT HAVING A HIGH

A. E. STALEY MANUFACTURING COMPANY
  3956066  -  GLUCOSE ISOMERIZING ENZYME

AGENCE NATIONALE DE VALORISATION DE LA RECHERCHE (ANVAR)
  3753858  -  METHOD OF CONVERTING GLUCOSE INTO FRUCTOSE
  3933587  -  METHOD FOR PRODUCTION OF IMMOBILIZED ENZYME
  3950222  -  METHOD OF IMMOBILIZING ENZYMES TO MICROBIAL CELLS
  4004979  -  PREPARATION OF ACTIVE PROTEINS CROSS-LINKED TO INACTIVE PROTEINS

AGENCY OF INDUSTRIAL SCIENCE & TECHNOLOGY
  4160698  -  ENZYME IMMOBILIZATION WITH AZIDO COMPOUNDS
  4269941  -  METHOD FOR ENZYME IMMOBILIZATION

AJINOMOTO COMPANY INCORPORATED
  3985617  -  IMMOBILIZATION OF BIOLOGICALLY ACTIVE PROTEINS WITH A POLYPEPTIDE
  4297173  -  METHOD FOR DETERMINING AMMONIA AND SENSOR THEREFOR
  4299669  -  METHOD FOR DETERMINING THE CONCENTRATION OF AN L-AMINO ACID IN FE
```

Part 2D - Inventors of Individually Owned Patents

In Part 2D, inventor names, full addresses, patent numbers and titles are given for unassigned 1975-1981 patents; inventor names, city and state, patent numbers and titles are given for patents assigned to individuals. This information facilitates identification of the apparently unaffiliated or "independent inventor" participants in the technology. Standard, two character codes are used to designate U.S. states and foreign countries. While the meaning of state codes should be obvious, the foreign country codes may not. Consequently, those appearing in the Part 2D listing are defined in Appendix A.

EXAMPLE

```
IMMOBILIZED ENZYMES - PART 2D                                                    PAGE D

                    INVENTORS OF INDIVIDUALLY OWNED PATENTS (1/75-12/81)   (ALPHA LISTING)

 INVENTOR NAME                                  STREET                    CITY                ST   ZIP/CNTRY

 ALI            MAJID                           19 EDGEMONT PL.           TEANECK             NJ   07666
4256833  -  ENZYME IMMUNOASSAY FOR ALLERGIC DISORDERS

 ALLEN          BILLY        R.                 2034 DUBLIN-GRANVILLE RD. COLUMBUS            OH   43229
4115198  -  METHOD OF IMMOBILIZATION OF BIOLOGICALLY ACTIVE ORGANIC SUBSTANCES INCLUDING ENZYMES

 BARRETT        M.           JAMES              1500 SPRING GARDEN ST.    PHILADELPHIA        PA   19101
4001583  -  COVALENTLY BOUND BIOLOGICAL SUBSTANCES TO PLASTIC MATERIALS AND USE IN RADIOASSAY

 BRENNER        MAX                             SPIEGELBERGSTRASSE 33     CH-4059 BASEL       CH
3956113  -  PROCESS FOR THE MANUFACTURE OF AMINO COMPOUNDS FIXED TO CARRIERS

 CHARLES        MARVIN                          622 N. 29 ST.             ALLENTOWN           PA   18104
```

At the end of Part 2D is a list of those patents (1963-1981) with neither assignment nor inventor information in the data base. Essentially, this encompasses all patenting in the period 1963-1968, and unassigned patents from 1969 through 1974. Titles are included for most patents granted subsequent to January, 1969.

```
                    PATENTS (1/63-12/81) WITH NEITHER ASSIGNMENT NOR INVENTOR INFORMATION IN THE DATA BASE

3539455  -  MEMBRANE POLAROGRAPHIC ELECTRODE SYSTEM AND METHOD WITH ELECTROCHEMICAL COMPENSATION
3639558  -  IMMUNOLOGICAL REAGENT PARTICLES HAVING PROTEINACEOUS MATERIALS COVALENTLY BONDED THERETO
3715277  -  PREPARATION OF FIBERS CONTAINING FIBERS
3736230  -  PROCESS FOR PRODUCING 6-AMINOPENCILLANIC ACID
3809615  -  METHOD AND MEANS FOR NATURAL GAS DETECTION
3827565  -  METHOD AND DEVICE OF ARTIFICIAL ENDOCRINE PANCREAS
3843443  -  POLYPEPTIDE MATERIALS BOUND TO FLUOROCARBON POLYMERS
3850798  -  METHOD FOR SEPARATING A POLYPEPTIDE FROM MICROORGANISMS
        3410754   3413198   3414479   3415804   3416997   3418211   3419471   3419472   3095307   3126324   3139390   3167485
```

Part 3 - Front Pages of Selected Patents

Part 3 of each profile includes the front, or summary, page of selected patents. In addition to providing bibliographic information, such as the inventor, assignee, filing date, and patent classification, the front page of each patent includes a brief abstract describing the invention, and, where appropriate, a representative drawings illustrating the invention.

Part 3 of each profile includes the front page of patents issued between January and April, 1982 (for all profiles except Mutation/Genetic Engineering which contains patents through June 1, 1982), as well as other patents of interest in the subject area. Also included is a list of the selected patents in order of appearance.

Foreign Patent Documents

Following Part 3 of the Mutation/Genetic Engineering profile is a listing of recent foreign patent documents in the International Patent Classification entitled "Genetic Engineering." The documents included were published between August, 1980 and March, 1982, and are those for which no corresponding U.S. patent document presently exists. Tables showing document number, origin, date, subject matter and assignee or inventor begin on page 43.

* * *

PATENTS INCLUDED IN THE PROFILES

Patent activity profiles are normally generated by first identifying key Patent and Trademark Office classifications, i.e., those entirely or substantially pertinent to the technology of interest. All the patents in these classifications are then included in the profile. This procedure results, in most cases, with the inclusion of the majority of patents relevant to the technology and few non-relevant patents. While one can never be sure of the absolute completeness or "purity" of any subset in a collection as large and varied as the patent file, it is felt that the patent file portions selected for review in this publication include patents representative of the overall trends in the defined areas and essentially exclude patents which are not relevant to the subject technology.

Important Note

It should also be noted that in 1979, the Patent and Trademark Office issued substantially fewer patents than normal (about 49,000 as compared to about 66,000 in 1978) due to a lack of funds to print patents. Therefore, while the 1979 patent grant data may be low, the decrease should not be attributed to a fall-off in technological activity.

LEGAL DECISIONS AFFECTING BIOTECHNOLOGY PATENTING

Background

Prior to the decision of the Supreme Court in Diamond v. Chakrabarty[1], the policy of the U.S. Patent and Trademark Office (PTO) had been to allow patent protection for processes using microorganisms and for products containing microorganisms in combination with inert carriers or other elements. The PTO had not, however, issued patents which claimed microorganisms, per se. The PTO felt that new life forms were not statutory subject matter as defined by 35 USC 101, and that only legislative action, such as the Plant Patent Act of 1930 and the Plant Variety Protection Act of 1970, would permit enlarging the scope of patent protection. This view was enforced by the decision of the Court of Customs and Patent Appeals (CCPA) in In re Mancy[2], which held patentable a process for using a novel strain of microorganism. It presumed "without deciding," that claims to the novel microorganism would not be patentable since the microorganism was a product of nature, and therefore not new, as required by patent law.

Chakrabarty

In 1972, Chakrabarty, a microbiologist working for the General Electric Company, filed a patent application, claiming "a bacterium from the genus Pseudomonas containing at least two stable energy-generating plasmids, each of said plasmids providing a separate hydrocarbon degradative pathway." This human-made, genetically engineered bacterium was described as capable of breaking down multiple components of crude oil. Because of this property, possessed by no naturally occuring bacteria, Chakrabarty believed his invention to have significant value for the treatment of oil spills.

Chakrabarty's claims were of three types: first, the method of producing the bacteria; second, the bacteria combined with a carrier material; and third, the bacteria themselves. The patent examiner allowed the claims falling into the first two categories, but rejected claims for the bacteria. His decision was based on two grounds: that microorganisms are "products of nature," and, that as living things, they are not patentable subject matter under 35 USC 101.

Chakrabarty appealed the rejection of these claims to the Patent Office Board of Appeals. The Board reversed the Examiner on the first ground, concluding that the new bacteria were not products of nature, because Pseudomonas bacteria containing two or more different energy-generating plasmids are not naturally occurring. However, they affirmed on the second ground of rejection. Relying on the legislative history of the

---

[1]Diamond v. Chakrabarty, 100 S.Ct. 2204, 206 USPQ 193 (1980).
[2]In re Mancy, 499 F. 2d 1289, 182 USPQ 303 (1974).

1930 Plant Patent Act, in which Congress extended patent protection to certain asexually reproduced plants, the Board concluded that Section 101 was not intended to cover living things such as these laboratory created microorganisms.

Chakrabarty then appealed to the CCPA[3], where, by a divided vote, the decision was reversed. The CCPA cited its prior decision, In re Bergy,[4] which held that the fact that microorganisms are alive is without legal significance for purposes of the patent law. Judge Rich, writing for the majority, proclaimed that it is not necessary that Congress shall have forseen a new field of technology or useful art to bring it within the scope of 35 USC 101.

The Government appealed to the Supreme Court, which held that a live, human-made microorganism is patentable subject matter under 35 USC 101.

The Supreme Court based its decision on the fact that Congress, in choosing such expansive terms in 35 USC 101 as "manufacture" and "composition of matter" modified by the comprehensive "any," contemplated that the patent laws should be given wide scope. The Court cited the Committee Reports accompanying the 1952 Patent Act as evidence that Congress intended statutory subject matter to "include anything under the sun that is made by man." Chief Justice Burger, writing for the majority, stated that "the patentee has produced a new bacterium with markedly different characteristics from any found in nature and one having potential for significant utility. His discovery is not nature's handiwork, but his own; accordingly it is patentable subject matter under section 101."

PTO Practice after Chakrabarty

After the Chakrabarty decision, the PTO issued an announcement that patent applications including claims to microorganisms which had been under suspension would now be examined. Assuming that the products involved were the result of human intervention and were not products of nature, such claims would not be rejected under 35 USC 101 as directed to unpatentable subject matter.

The PTO clarified the issue in the Manual of Patent Examining Procedure (MPEP) Section 2105, where it issued guidelines as to how 35 USC 101 would be interpreted. The MPEP reviewed the Supreme Court statements set forth in the Chakrabarty opinion and concluded that (1) the Court did not limit its decision to genetically engineered living organisms, (2) the Court enunciated a very broad interpretation of "manufacture" and "composition of matter" in Section 101, and (3) the Court set forth several tests for weighing whether patentable subject matter under Section 101 is present. Of the tests set forth by the Court the following are especially noted as applying to biotechnology:

---

[3]In re Chakrabarty, 571 F. 2d 40, 197 USPQ 72 (1978).
[4]In re Bergy, 563 F. 2d 1031, 195 USPQ 344 (1977). See also In re Bergy, 596 F. 2d 952, 201 USPQ 352 (1979).

"A nonnaturally occurring manufacture or composition of matter - a product of human ingenuity - having a distinctive name, character and use is patentable subject matter."

"Production of articles for use from raw materials by giving these materials new forms, qualities, properties or combinations whether by hand, labor or machinery is a manufacture under Section 101."

Other PTO Requirements

35 U.S.C. 112 requires the inventor to set forth a written description of the invention in a manner to enable any person, skilled in the art to which it pertains, to make and use it. In patent applications where the claimed invention involves the use of a microorganism, a problem arises when the microorganism is neither known nor readily available to the public. In many cases, microorganisms are obtained from soil samples. Since soil samples are teaming with microbial life, it is impossible to find a match to the inventor's microorganism. A written description cannot sufficiently disclose how to obtain the microorganism from nature so as to satisfy the requirements under 35 U.S.C. 112.

In response to this problem, the CCPA in In re Argoudelis[5] sanctioned the practice which provides that a culture of the microorganism be deposited in a United States depository before the application is filed. Following the decision, the PTO published guidelines in MPEP 608.01(p) which set forth the requirements necessary to provide an adequate disclosure of the microorganism in accordance with 35 USC 112.

The guidelines require: 1) that the applicant, no later than the U.S. filing date of the application, make a deposit of the culture of the microorganism in a depository affording permanence of the deposit and ready accessibility thereto by the public if a patent is granted; 2) that the deposit be referred to in the body of the specification as filed and be identified by deposit number, name, and address of the depository; and that the taxonomic description, to the extent available, be included in the specification; 3) that the applicant provide assurance, in the form of an averment under oath or a declaration, of the permanent availability of the culture to the public.

* * *

---

[5]In re Argoudelis, 434 F. 2d 1390, 168 USPQ 99 (1970).

MUTATION/GENETIC ENGINEERING

This profile is directed to processes for producing a stable, inheritable change in the genotype of an animal, a plant cell or a microorganism. This may be accomplished by artifically inducing a structural change in a gene or by the incorporation of genetic material from an outside source. The outside source may include chemically synthesized or modified genes. Also included are methods of modifying plasmids by chemical or biochemical processes.

INCLUDED IN THIS PROFILE ARE ALL OF THE PATENTS FROM:

Class 435, Subclass 172

AND SELECTED PATENTS FROM:

Class 435, Subclasses 5, 6, 8, 89-91, 253, 820
Class 424, Subclasses 85, 117

ACTIVITY INDICES (1979-1981)

GROWTH	44.8%
FOREIGN SHARE	38.5%
CORPORATE OWNED	80.8%
GOVERNMENT OWNED	5.8%
U.S. OWNED OF FOREIGN	10.0%

PATENT ACTIVITY

BY PATENT GRANT DATE
1972-1981

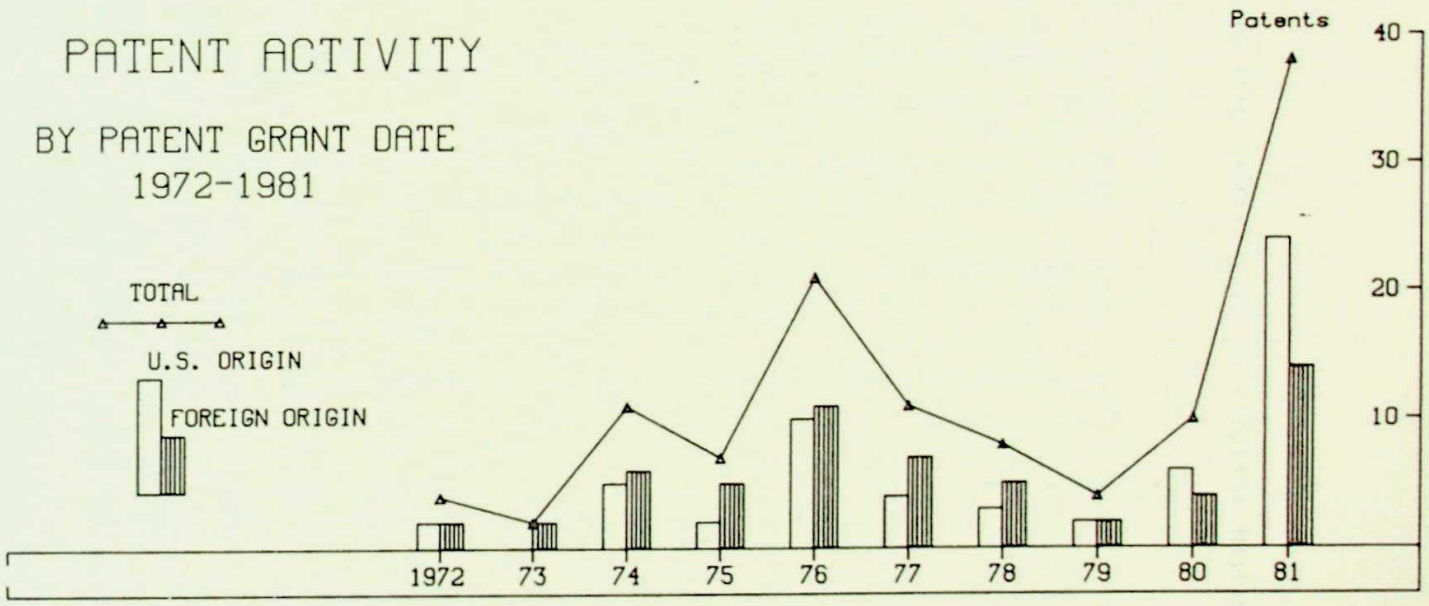

BY APPLICATION FILING DATE
1970-1979

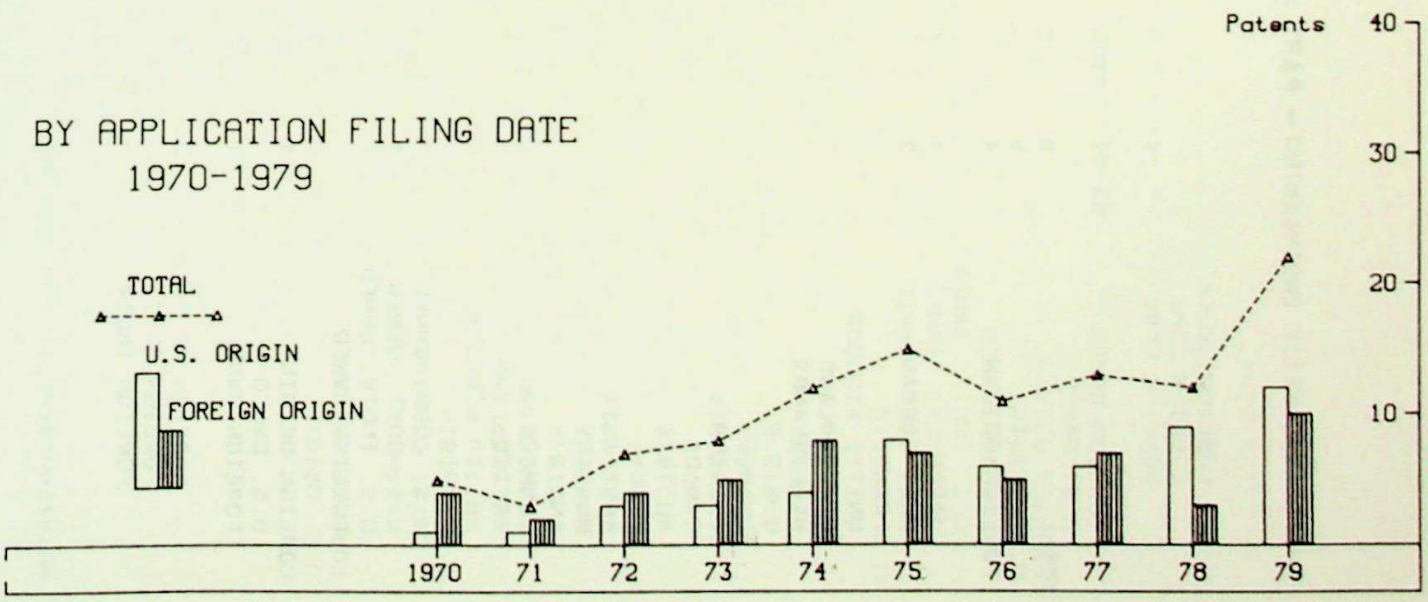

MUTATION/GENETIC ENGINEERING – **PART 2A**

PATENT ACTIVITY (1/63-12/81) BY DATE OF PATENT GRANT

	NUMBER OF PATENTS															
	63-67	1968	1969	1970	1971	1972	1973	1974	1975	1976	1977	1978	1979	1980	1981	TOTAL
TOTAL	9	2	4	1	9	4	2	11	7	21	11	8	4	10	38	141
U.S. ORIGIN	5		4		3	2		5	2	10	4	3	2	6	24	70
FOREIGN ORIGIN	4	2		1	6	2	2	6	5	11	7	5	2	4	14	71
JAPAN	1	1			4	1		1	2	2	1	3			5	21
WEST GERMANY	2							1	1		2			1	2	9
FRANCE						1		1		2	2		1		1	8
UNITED KINGDOM					1		1			3		1		1		7
SWITZERLAND							1	2	1						1	5
NETHERLANDS		1						1							1	3
U.S.S.R.											1			1	1	3
SWEDEN					1					1						2
BELGIUM									1		1					2
CANADA				1						1						2
AUSTRIA													1	1		2
ITALY										1					1	2
AUSTRALIA										1						1
HUNGARY															1	1
INDIA												1				1
DENMARK															1	1
MEXICO	1															1
U.S. ORIGIN	5		4		3	2		5	2	10	4	3	2	6	24	70
U.S. CORP. OWNED	3		3		3	2		4	2	9	4	3	2	6	20	61
U.S. GOVT. OWNED	1									1					2	4
U.S. INDIV. OWNED	1		1					1							2	5
FOREIGN OWNED																
FOREIGN ORIGIN	4	2		1	6	2	2	6	5	11	7	5	2	4	14	71
U.S. OWNED							2	1	1			1			2	7
FOREIGN OWNED	4	2		1	6	2		5	4	11	7	4	2	4	12	64
FOREIGN CORP.	4	2		1	6	2		4	4	8	6	4	1	3	8	53
FOREIGN GOVT.													1			1
FOREIGN INDIV.								1		3	1			1	4	10

MUTATION/GENETIC ENGINEERING

PATENT ACTIVITY (PATENTS GRANTED 1/67-12/81) BY DATE OF PATENT APPLICATION

	NUMBER OF PATENTED APPLICATIONS															
	PRE 68	1968	1969	1970	1971	1972	1973	1974	1975	1976	1977	1978	1979	1980	1981	TOTAL
TOTAL	8	5	5	5	3	7	8	12	15	11	13	12	22	6		132
U.S. ORIGIN	4	2	3	1	1	3	3	4	8	6	6	9	12	3		65
FOREIGN ORIGIN	4	3	2	4	2	4	5	8	7	5	7	3	10	3		67
JAPAN	2	2		2	1		1	3		2	2		3	2		20
WEST GERMANY				1			1			1	1	1	2			7
FRANCE				1		1	1		3		1	1				8
UNITED KINGDOM			2					3			1		1			7
SWITZERLAND					1	1	2							1		5
NETHERLANDS	1					1							1			3
U.S.S.R.									1			1	1			3
SWEDEN		1						1								2
BELGIUM						1			1							2
CANADA	1							1								2
AUSTRIA											2					2
ITALY									1	1						2
AUSTRALIA									1							1
HUNGARY													1			1
INDIA										1						1
DENMARK													1			1
MEXICO																
U.S. ORIGIN	4	2	3	1	1	3	3	4	8	6	6	9	12	3		65
U.S. CORP. OWNED	3	2	3	1	1	2	3	4	7	6	6	8	11	1		58
U.S. GOVT. OWNED									1			1		1		3
U.S. INDIV. OWNED	1					1							1	1		4
FOREIGN OWNED																
FOREIGN ORIGIN	4	3	2	4	2	4	5	8	7	5	7	3	10	3		67
U.S. OWNED			1		2		1			1			1	1		7
FOREIGN OWNED	4	3	1	4		4	4	8	7	4	7	3	9	2		60
FOREIGN CORP.	4	3	1	3		4	4	6	5	4	6	1	7	1		49
FOREIGN GOVT.											1					1
FOREIGN INDIV.				1				2	2			2	2	1		10

MUTATION/GENETIC ENGINEERING

Organizational Patenting: Ranked

NO. OF PATENTS	ASSIGNEES WITH 2 OR MORE PATENTS (1969-1981)
7	UPJOHN CO.
5	MASSACHUSETTS INSTITUTE OF TECHNOLOGY
4	CIBA-GEIGY CORP.
4	GENERAL ELECTRIC CO.
4	UNIVERSITY OF ILLINOIS FOUNDATION
3	AJINOMOTO CO. INC.
3	CETUS CORP.
3	TAKEDA CHEMICAL INDUSTRIES LTD.
3	RIKAGAKU, KENKYUSHO
3*	UNIVERISTY OF CALIFORNIA, THE REGENTS OF
2	AGENCE NATIONALE DE VALORISATION DE LA RECHERCHE (ANVAR)
2	AGROFERM AG
2	CPC INTERNATIONAL INC.
2	GESELLSCHAFT FUR BIOTECHNOLOGISCHE FORSCHUNG MBH
2	INSTITUT FRANCAIS DU PETROLE
2	KERNFORSCHUNGSANLAGE JULICH GMBH
2	KYOWA HAKKO KOGYO CO. LTD.
2	RECHERCHE ET INDUSTRIES THERAPEUTIQUES, R.I.T.
2	STERLING DRUG INC.
2	UNIVERSITY OF MICHIGAN, THE REGENTS OF
2	UNIVERSITY OF MINNESOTA, THE REGENTS OF
2	WISTAR INSTITUTE
2	BEECHAM GROUP LTD.
2	GLAXO LABORATORIES LTD.
2	MERCK & CO., INC.
2	SMITHKLINE CORP.
2*	STANFORD UNIVERSITY, LELAND JUNIOR, THE BOARD OF TRUSTEES

*Composite Total. See Appendix A.

ORGANIZATIONAL PATENTING (1/69-12/81) - - ALPHA LISTING

ABBOTT LABORATORIES
4224408 - DEOXYRIBONUCLEIC ACID SYNTHESIS USING BINDING PROTEIN

AGENCE NATIONALE DE VALORISATION DE LA RECHERCHE (ANVAR)
3833474 - ASPOROGENIC PROTEASE-PRODUCING STRAINS OF BACILLUS SUBTILIS
4172764 - PROCESS FOR OBTAINING HYBRID STRAINS OF YEASTS

AGROFERM AG
4138291 - MICROBIOLOGICAL METHODS
4211846 - PROCESSES FOR THE MANUFACTURE OF D(-)-3-HYDROXYBUTYRIC ACID AND D(-)-3-HYDROXYBUTYRIC ACID PRODUCING MUTANTS

AJINOMOTO COMPANY INCORPORATED
3622459 - METHOD OF PREPARING A PROTEOLYTIC ENZYME BY FERMENTATION
4066501 - METHOD FOR PRODUCING L-LYSINE BY FERMENTATION
4275157 - METHOD FOR THE PRODUCTION OF L-LYSINE

AKTIEBOLAGET ASTRA
3616236 - PRODUCTION OF RHIZOBIUM STRAINS RESISTANT TO DRYING

AKZONA INCORPORATED
4292403 - DETECTION AND/OR DETERMINATION OF IGM, IGA, IGD AND IGE IMMUNOGLOBULINS

ALBERT ROLLAND S.A.
3669846 - PROCESS FOR OBTAINING AND PRESERVING STABLE BACTERIAL VARIANTS

AMERICAN HOME PRODUCTS CORPORATION
3984285 - PROCESS FOR ENHANCING THE PRODUCTION OF ENTEROTOXIN BY ESCHERICHIA COLI AND VIBRIO CHOLERAE

BAYER AKTIENGESELLSCHAFT
3387434 - MICROBIOLOGICAL PRODUCTION OF INVERTASE

BEECHAM GROUP LIMITED
3966707 - PROCESS FOR PREPARING DOUBLE STRANDED RNA
3975520 - BIOLOGICALLY ACTIVE MATERIAL

BIORESEARCH, INC.
4256832 - CARCINOGEN AND MUTAGEN SCREENING METHOD AND APPARATUS

BOARD OF TRUSTEES OF THE LELAND STANFORD UNIVERSITY
4302204 - TRANSFER AND DETECTION OF NUCLEIC ACIDS

BURROUGHS WELLCOME CO.
3709782 - HETEROPLOID CELL LINES

CETUS CORPORATION
3950224 - METHOD FOR CLONING FILAMENTOUS MICROORGANISMS
4262090 - INTERFERON PRODUCTION
4293652 - METHOD FOR SYNTHESIZING DNA SEQUENTIALLY

CIBA-GEIGY CORPORATION
3567585 - PROCESS FOR OBTAINING BCG-CULTURES
3776815 - PROCESS FOR THE MANUFACTURE OF CEPHALOSPORIN C
3923601 - PROCESS FOR THE MANUFACTURE OF CEPHALOSPHORIN C
4298692 - FERMENTATION PROCESS FOR PRODUCING A RIFAMYCIN DERIVATIVE

ORGANIZATIONAL PATENTING (1/69-12/81) - - ALPHA LISTING

CPC INTERNATIONAL INC.
3813318 - PRODUCTION OF XYLOSE (DEXTROSE) ISOMERASE ENZYME PREPARATIONS
3957587 - PRODUCTION OF XYLOSE (DEXTROSE) ISOMERASE ENZYME PREPARATIONS

ELI LILLY AND COMPANY
4115197 - PROCEDURE FOR OBTAINING PENICILLIUM SPECIES MUTANTS WITH IMPROVED ABILITY TO SYNTHESIZE MYCOPHENOLIC ACID

ETABLISSEMENT ANI, CHEZ ME BECK, AVOCAT
4030976 - PROCESS FOR PREPARING A PRODUCT HAVING A BIOLOGICAL ACTIVITY

FORSYTH DENTAL INFIRMARY FOR CHILDREN
4133875 - METHOD OF CONTROLLING DENTAL CARIES WITH STREPTOCOCCUS MUTANS MUTANT STRAINS

GENERAL ELECTRIC COMPANY
3813316 - MICROORGANISMS HAVING MULTIPLE COMPATIBLE DEGRADATIVE ENERGY-GENERATING PLASMIDS AND PREPARATION THEREOF
3923597 - MERCURY CONCENTRATION BY THE USE OF MICROORGANISMS
3923603 - DISCRETE PLASMID CONSTRUCTION FROM CHROMOSOMAL GENES IN PSEUDOMONAS
4259444 - MICROORGANISMS HAVING MULTIPLE COMPATIBLE DEGRADATIVE ENERGY-GENERATING PLASMIDS AND PREPARATION THEREOF

GESELLSCHAFT FUR BIOTECHNOLOGISCHE FORSCHUNG MBH
4064011 - PROCESS FOR PRODUCING ECORI RESTRICTION ENDONUCLEASE WITH <I E.COLI <B MUTANTS
4304863 - PROCESS FOR THE PRODUCTION OF HYBRID BACTERIA

GIST-BROCADES N.V.
3855064 - PREPARATION OF A PROTEOLYTIC ENZYME

GLAXO LABORATORIES LIMITED
3597318 - PRODUCTION OF DOUBLE STRANDED RIBONUCLEIC ACID
4075061 - METHOD FOR PRODUCING CEPHALOSPORINS

GRUPPO LEPETIT S.P.A.
4276382 - ANTIBIOTIC SUBSTANCES

GYOGYSZERKUTATO INTEZET
4294927 - GENETIC PROCESS FOR THE PREPARATION OF ANTIBIOTIC-PRODUCER MICROMONOSPORA STRAINS

HOECHST AKTIENGESELLSCHAFT
4195125 - PROCESS FOR OBTAINING INSULIN-PRODUCING ANIMAL CELLS

HOFFMANN-LA ROCHE INC.
4189426 - RECOMBINANT HORMONAL COMPOSITIONS AND METHOD

INSTITUTE FOR CANCER RESEARCH
4072574 - SYSTEM FOR IN VITRO ASSAY FOR MUTAGENICITY AND/OR CARCINOGENICITY OF CHEMICALS OR OTHER EXOGENOUS AGENTS

INSTITUT FRANCAIS DU PETROLE
3930946 - YEASTS
3986933 - METHOD OF PREPARING YEASTS ENRICHED IN L-LYSINE AND CAPABLE OF EXCRETING ORGANIC ACIDS

KERNFORSCHUNGSANLAGE JULICH GMBH
4039445 - MATRIX OF ALGAE AND METHOD OF MAKING SAME AND METHOD OF OBTAINING URANIUM FROM SEA WATER BY SAID MATRIX
4263403 - METHOD OF EXTRACTING URANIUM FROM SEA WATER

KIKKOMAN SHOYU CO., LTD.
4028184 - PROCESS FOR PRODUCING 3' ,5' -CYCLIC ADENYLIC ACID

ORGANIZATIONAL PATENTING (1/69-12/81) - - ALPHA LISTING

KYOWA HAKKO KOGYO CO., LTD
3620921 - PROCESS FOR PRODUCING 5'-INOSINIC ACID AND 5'-GUANYLIC ACID NUCLEOTIDES
4086137 - PROCESS FOR THE PRODUCTION OF L-ARGININE BY FERMENTATION

LABATT, JOHN LIMITED
3507750 - PROCESS FOR PREPARING MILK COAGULATING ENZYME COMPLEX

LIQUICHIMICA S.P.A.
3954536 - PROCESS FOR MUTATING YEAST

LOUISIANA STATE UNIVERSITY FOUNDATION
4278766 - MUTANT MICROORGANISMS USEFUL FOR THE PRODUCTION OF SINGLE CELL PROTEIN AND AMINO ACIDS

MASSACHUSETTS GENERAL HOSPITAL
4271145 - PROCESS FOR PRODUCING ANTIBODIES TO HEPATITIS VIRUS AND CELL LINES THEREFOR

MASSACHUSETTS INSTITUTE OF TECHNOLOGY
3956275 - 2-DEOXYSTREPTOMYCIN
3993544 - DERIVATIVES OF STREPTOMYCIN AND METHOD OF PRODUCING STREPTOMYCIN DERIVATIVES BY MUTATIONAL BIOSYNTHESIS
4066510 - ASSAY FOR MUTAGENESIS IN DIPLOID HUMAN LYMPHOBLASTS
4299915 - ASSAY FOR MUTAGENESIS IN BACTERIAL CELLS
4302535 - ASSAY FOR MUTAGENESIS IN HETEROZYGOUS DIPLOID HUMAN LYMPHOBLASTS

MEIJI SEIKA KAISHA LTD.
3616243 - PROCESS FOR THE PRODUCTION OF AN ANTIBIOTIC SUBSTANCE 2'-AMINO-2'-DEOXY-KANAMYCIN IN HIGHER YIELD

MERCK + CO., INC.
3582469 - PRODUCTION OF DOUBLE-STRANDED RIBONUCLEIC ACID
3629235 - PROCESS FOR ISOLATING AN INTERFERON INDUCER AND THE PRODUCT PER SE

MITSUBISHI PETROCHEMICAL CO., LTD.
4276380 - PRODUCTION OF L-AMINO ACIDS

MIYAIRI KINZAI KENKYUSHO COMPANY LIMITED
3932670 - METHOD OF MANUFACTURING A BACTERIAL PREPARATION CONSISTING OF A NORMAL RUMEN BACTERIAL FLORA WITH AN IMPROVED ABILITY TO UTILIZE AMMONIUM SALTS

MONSANTO COMPANY
3436309 - MODIFYING STARCHES

MORINAGA MILK INDUSTRY CO. LTD.
3855063 - PROCESS FOR PRODUCING A MICROBIAL PROTEINOUS SUBSTANCE

NOVO INDUSTRI A/S
4266031 - PROTEASE PRODUCT OF REDUCED ALLERGENICITY

PFIZER INC.
4296203 - XANTHOMONAS BIPOLYMER FOR USE IN DISPLACEMENT OF OIL FROM PARTIALLY DEPLETED RESERVOIRS

PHILLIPS PETROLEUM COMPANY
3975234 - MICROBIAL PRODUCTION OF DICARBOXYLIC ACIDS

PIKTOR LIMITED
4001080 - PRODUCTION OF IMMUNOLOGICAL MATERIALS

ORGANIZATIONAL PATENTING (1/69-12/81) - - ALPHA LISTING

PRESIDENT AND FELLOWS OF HARVARD COLLEGE
4264737 - METHOD OF MAKING GENETICALLY STABLE MUTANTS OF +I VIBRIO CHOLERAE

RECHERCHE ET INDUSTRIES THERAPEUTIQUES, R.I.T.
3907986 - LIVE ATTENUATED INFECTIOUS BOVINE RHINOTRACHEITIS VIRUS VACCINES AND PREPARATION THEREOF
4008317 - VARICELLA-ZOSTER VIRUS VACCINE AND PREPARATION THEREOF

REGENTS OF UNIVERSITY OF CALIFORNIA
4264731 - DNA JOINING METHOD
4283489 - PURIFICATION OF NUCLEOTIDE SEQUENCES SUITABLE FOR EXPRESSION IN BACTERIA

RESEARCH CORPORATION
4190495 - MODIFIED MICROORGANISMS AND METHOD OF PREPARING AND USING SAME

RIKAGAKU, KENKYUSHO
3956064 - DEOXYRIBONUCLEASE AND PROCESS FOR ITS PREPARATION
4080261 - NOVEL ENDONUCLEASE AND PROCESS FOR PRODUCTION THEREOF
4259446 - PROCESS FOR PREPARATION OF DEOXYRIBONUCLEASES

SCHWEIZERISCHES SERUM- UND IMPFINSTITUT UND -
3856935 - ORAL TYPHOID VACCINE AND METHOD OF PREPARING THE SAME

SMITHKLINE CORPORATION
3821193 - ANTIVIRAL COMPLEX OF RNA AND POLYSACCHARIDE
4293546 - ANTHRACYCLINE ANTIBIOTICS PRODUCED BY +I STREPTOSPORANGIUM FRAGILIS +B SHEARER SP. NOV. ATCC 31519

SOCIETE D ASSISTANCE TECHNIQUE POUR PRODUITS NESTLE S.A.
3841967 - PROCESS FOR THE PRODUCTION OF ZEAXANTHIN

STANFORD UNIVERSITY, LELAND JUNIOR, THE BOARD OF TRUSTEES OF
4237224 - PROCESS FOR PRODUCING BIOLOGICALLY FUNCTIONAL MOLECULAR CHIMERAS

STERLING DRUG INC.
3972930 - AMINOCYCLITOL ANTIBIOTICS
4028188 - AMINOCYCLITOL ANTIBIOTICS

SVENSKA TRAFORSKNINGSINSTITUTET
3962033 - METHOD FOR PRODUCING CELLULOSE PULP

SYBRON CORPORATION
4288545 - MICROBIOLOGICAL PROCESS FOR REMOVING OLEAGINOUS MATERIAL FROM WASTEWATER AND MICROBIOLOGICAL COMBINATION CAPABLE OF SAME

TAKEDA CHEMICAL INDUSTRIES LTD.
3616207 - METHOD FOR THE PRODUCTION OF 5'-INOSINIC ACID AND INOSINE
3689359 - METHOD FOR PRODUCING CITRIC ACID
3929577 - PRODUCTION OF CEPHALOSPORIN C

TALRES DEVELOPMENT (N.A.) N.V.
4235966 - PROCESS FOR THE PRODUCTION OF POLYSACCHARIDE

TANABE SEIYAKU CO. LTD.
3902967 - PROCESS FOR PRODUCING L-ARGININE BY FERMENTATION

UNITED STATES OF AMERICA, AGRICULTURE
4277564 - PREPARING ENTOMOCIDAL PRODUCTS WITH OLIGOSPOROGENIC MUTANTS OF BACILLUS THURINGIENSIS

ORGANIZATIONAL PATENTING (1/69-12/81) - - ALPHA LISTING

UNITED STATES OF AMERICA, ARMY
4275163 - CELLULASE-PRODUCING MICROORGANISM

UNITED STATES OF AMERICA HEALTH EDUCATION AND WELFARE, MESNE
3992522 - TEMPERATURE-SENSITIVE RECOMBINANT MUTANT VIRUSES AND A PROCESS FOR PRODUCING SAME

UNIVERSITY OF CALIFORNIA, THE REGENTS OF
3936355 - MICROORGANISM GROWTH MEDIA AND THE STABILIZATION THEREOF

UNIVERSITY OF ILLINOIS FOUNDATION
3444043 - INTERFERENCE WITH BIOLOGICALLY ACTIVE RNA FORMATION
3444044 - REPLICATION OF MUTANT NUCLEIC ACIDS
3661893 - SYNTHESIS IN VITRO OF NUCLEIC ACIDS AND PRODUCTS USED THEREIN AND PRODUCTS PRODUCED THEREFROM
3689475 - SYNTHESIZED MUTANT RNA AND METHODS OF PREPARING SAME

UNIVERSITY OF MICHIGAN, THE REGENTS OF
3930956 - METHOD FOR THE GENETIC DETECTION OF MICROORGANISMS
4038143 - TEST KIT FOR THE GENETIC DETECTION OF MICROORGANISMS

UNIVERSITY OF MINNESOTA, THE REGENTS OF
3855408 - POULTRY VACCINE
4082613 - PROCESS FOR THE PRODUCTION OF INSULIN BY GENETICALLY TRANSFORMED FUNGAL CELLS

UNIVERSITY OF ROCHESTER
4302544 - ASPOROGENOUS MUTANT OF +I B. SUBTILIS \ FOR USE AS HOST COMPONENT OF HV1 SYSTEM

UPJOHN COMPANY
4029549 - PROCESS OF PRODUCING 9ALPHA-HYDROXY-3-KETOBISNORCHOL-4-EN-22-OIC WITH MYCOBACTERIUM FORTUITUM
4062729 - MICROBIAL TRANSFORMATION OF STEROIDS
4211841 - PROCESS FOR MICROBIAL TRANSFORMATION OF STEROIDS
4271266 - PROCESS FOR PREPARING LINCOMYCIN
4273875 - PLASMID AND PROCESS OF ISOLATING SAME
4293644 - PROCESS FOR PREPARING ANDROST-4-ENE-3,17-DIONE
4293645 - PROCESS FOR PREPARING ANDROSTA-1,4-DIENE-3,17-DIONE AND ANDROST-4-ENE-3,17-DIONE

WISTAR INSTITUTE
4172124 - METHOD OF PRODUCING TUMOR ANTIBODIES
4196265 - METHOD OF PRODUCING ANTIBODIES

INVENTORS OF INDIVIDUALLY OWNED PATENTS (1/75-12/81) (ALPHA LISTING)

INVENTOR NAME			STREET	CITY	ST	ZIP/CNTRY
BALITSKAYA	ROZA	MITROFANO	ULITSA VYBORGSKAYA, 4, KV. 6	MOSCOW		SU
4054489 - METHOD OF PREPARING L-GLUTAMIC ACID AND ITS SODIUM SALT						
BEARE	ABRAHAM	SESTEL	FLAT 2B, HARVARD HOSPITAL, COO	SALISBURY, WILTSHIRE		EN
3991179 - INFLUENZA VACCINES						
BELJANSKI	MIRKO		46 BOULEVARD DE PORT-ROYAL	75005 PARIS		FR
4264729 - METHOD AND REAGENT FOR DETECTING CANCERIGENIC AND ANTICANCEROUS SUBSTANCES						
DEBABOV	VLADIMIR	G.	ULITSA MIKLUKHO-MAKLAYA, 43, K	MOSCOW		SU
4278765 - METHOD FOR PREPARING STRAINS WHICH PRODUCE AMINOACIDS						
EVSTJUGOV-BABAEV	LEV	MIKHAILOV	ULITSA PUSHKINA, 22, KV. 36	MOSCOW		SU
4054489 - METHOD OF PREPARING L-GLUTAMIC ACID AND ITS SODIUM SALT						
FREDETTE	VICTORIEN		331 TAIT	VILLE ST. LAURENT, Q		CA
3936354 - ANTI-TUMOUR PRODUCT OF BACTERIAL ORIGIN						
GARNETT	JOHN	LYNDON	29 ARABELLA ST.	LONGUEVILLE, NEW SOU		AU
3981775 - ENZYME INSOLUBILIZATION						
KASATKINA	TATYANA	BORISOVNA	PROSPEKT MIRA, 120, KV. 226	MOSCOW		SU
4054489 - METHOD OF PREPARING L-GLUTAMIC ACID AND ITS SODIUM SALT						
KENYON	ROBERT	SYDNEY	29 GLEN ST.	EASTWOOD, NEW SOUTH		AU
3981775 - ENZYME INSOLUBILIZATION						
KHURGES	EVGENY	M.	ULITSA TIKHVINSKAYA, 1/13, KV.	MOSCOW		SU
4278765 - METHOD FOR PREPARING STRAINS WHICH PRODUCE AMINOACIDS						
KIT	MALON		11935 WINK DR.	HOUSTON	TX	77024
4307189 - METHOD FOR THE QUANTITATIVE DETERMINATION OF TERMINAL DEOXYNUCLEOTIDYL TRANSFERASE IN BIOLOGICAL SAMPLES						
KOZLOV	JURY	I.	MIKRORAION 2, KORPUS 3, KV. 17	MOSCOW		SU
4278765 - METHOD FOR PREPARING STRAINS WHICH PRODUCE AMINOACIDS						
KOZYREVA	LJUDMILA	F.	4 NOVOPODMOSKOVNY PEREULOK, 4,	MOSCOW		SU
4237228 - METHOD OF PRODUCING L-ISOLEUCINE USING +I BREVIBACTERIUM FLAVUM						
KUZNETSOVA	NATALYA	NIKOLAEVN	ULITSA DNEPROPETROVSKAYA, 23,	MOSCOW		SU
4054489 - METHOD OF PREPARING L-GLUTAMIC ACID AND ITS SODIUM SALT						
LAPOINTE	JEAN-ROCK		410 62ND AVE.	CHOMEDEY LAVAL, QUEB		CA
3936354 - ANTI-TUMOUR PRODUCT OF BACTERIAL ORIGIN						
LEONOVA	TATYANA	V.	ULITSA SVOBODY, 81, KORPUS 5,	MOSCOW		SU
4237228 - METHOD OF PRODUCING L-ISOLEUCINE USING +I BREVIBACTERIUM FLAVUM						
LIDDY	MICHAEL	JAMES	20 CARINYAN CRESCENT	CASTLE HILL, NEW SOU		AU
3981775 - ENZYME INSOLUBILIZATION						
MCCAHON	DAVID		10. BULLSWATER COMMON	PIRBRIGHT, NEAR WOKI		EN
3991179 - INFLUENZA VACCINES						

INVENTORS OF INDIVIDUALLY OWNED PATENTS (1/75-12/81) (ALPHA LISTING)

INVENTOR NAME			STREET	CITY	ST	ZIP/CNTRY
ROZINOV	MIKHAIL	N.	3 FRUNZENSKAYA ULITSA, 6, KV.	MOSCOW		SU
4278765 - METHOD FOR PREPARING STRAINS WHICH PRODUCE AMINOACIDS						
SEED	BRIAN	S.	40 GRAHAM RD.	SCARSDALE	NY	10583
4286964 - POLYFUNCTIONAL EPOXIDES AND HALOHYDRINS USED AS BRIDGING GROUPS TO BIND AROMATIC AMINE GROUP-CONTAINING ALCOHOLS						
SHAKULOV	RUSTEM	S.	ULITSA KRASNOGO MAYAKA, 14, KO	MOSCOW		SU
4278765 - METHOD FOR PREPARING STRAINS WHICH PRODUCE AMINOACIDS						
SHOLIN	ALBERT	FEDOROVIC	TEPLY STAN, 1A MIKRORAION, KOR	MOSCOW		SU
4054489 - METHOD OF PREPARING L-GLUTAMIC ACID AND ITS SODIUM SALT						
SUGIMOTO	KANAME			OKAYAMA		JP
4276282 - INTERFERON AND PREPARATIONS CONTAINING INTERFERON						
4285929 - TYPE II INTERFERON AND AGENTS THEREOF						
TYRRELL	DAVID	ARTHUR	.29 THE RIDGEWAY	STANMORE, MIDDLESEX		EN
3991179 - INFLUENZA VACCINES						
YANKOVSKY	NIKOLAI	K.	ULITSA VERKHNAYA RADISCHEVSKAY	MOSCOW		SU
4278765 - METHOD FOR PREPARING STRAINS WHICH PRODUCE AMINOACIDS						
YUEN	SHOKICHI			OKAYAMA		JP
4276282 - INTERFERON AND PREPARATIONS CONTAINING INTERFERON						
4285929 - TYPE II INTERFERON AND AGENTS THEREOF						
ZHDANOVA	NELLI	I.	LENINGRADSKOE SHOSSE, 112, KOR	MOSCOW		SU
4237228 - METHOD OF PRODUCING L-ISOLEUCINE USING +I BREVIBACTERIUM FLAVUM						
4278765 - METHOD FOR PREPARING STRAINS WHICH PRODUCE AMINOACIDS						
ZHDANOVA	NELLI	ISAAKOVNA	LENINGRADSKOE SHOSSE, 112/1, K	MOSCOW		SU
4054489 - METHOD OF PREPARING L-GLUTAMIC ACID AND ITS SODIUM SALT						

PATENTS (1/63-12/81) WITH NEITHER ASSIGNMENT NOR INVENTOR INFORMATION IN THE DATA BASE

3424655 - MUTANT DETECTION DEVICE
3785926 - PROCESS FOR THE ENZYMATIC REPRODUCTION OF INFORMATIONALLY ACTIVE RNA
3819482 - METHOD OF PREPARING HIGH YIELDS OF DOUBLE STRANDED RIBONUCLORIC ACID
3071518 3085946 3095359 3102080 3105014 3118820 3208909 3255095 3264194 3394008 3409505

MUTATION/GENETIC ENGINEERING

FRONT PAGES OF SELECTED PATENTS

Jan. -June 1, 1982 U.S. Patents (25)	Selected U.S. Patents (34)	
4,328,209	4,276,282	4,237,224
4,332,898	4,275,163	4,196,265
4,332,900	4,278,766	4,133,875
4,332,901	4,275,157	4,237,228
4,332,899	4,273,875	4,115,197
4,332,892	4,259,446	4,189,426
4,332,897	4,271,145	4,172,764
4,332,893	4,264,731	3,966,707
4,326,029	4,259,444	4,082,613
4,331,589	4,263,403	4,080,261
4,329,448	4,262,090	4,064,011
4,331,764	4,264,737	4,072,574
4,318,987	4,172,124	4,001,080
4,321,325	4,256,832	4,278,765
4,320,195	4,224,408	4,277,564
4,324,860		4,283,489
4,311,797		4,276,380
4,318,929		4,285,929
4,315,852		4,190,495
4,318,930		
4,322,497		
4,322,499		
4,313,938		
4,316,962		
4,309,503		

PATENTS ARE LISTED IN ORDER OF APPEARANCE

United States Patent [19]

Finkelstein et al.

[11] **4,328,209**

[45] **May 4, 1982**

[54] **CHOLERA VACCINE**

[75] Inventors: **Richard A. Finkelstein; Takeshi Honda**, both of Dallas, Tex.

[73] Assignee: **Board of Regents, The University of Texas System**, Austin, Tex.

[21] Appl. No.: **29,092**

[22] Filed: **Apr. 11, 1979**

[51] **Int. Cl.**[3] **A61K 39/106**; C12N 15/00; C12N 1/36; C12R 1/63

[52] **U.S. Cl.** **424/92**; 435/172

[58] **Field of Search** 424/92; 435/172

[56] **References Cited**

U.S. PATENT DOCUMENTS

3,145,144	8/1964	Ando	424/92
3,328,253	6/1967	Watanabe	424/92
3,329,573	7/1967	Hoerlein	424/92
3,972,858	8/1976	Stark et al.	424/92
4,125,492	11/1978	Cautrecasas	424/92
4,264,737	4/1981	Murphy	435/172

FOREIGN PATENT DOCUMENTS

737281	2/1970	Belgium	424/92
1452648	10/1976	United Kingdom	424/92
2000028	1/1979	United Kingdom	424/92

OTHER PUBLICATIONS

Finkelstein, "Cholera" CRC Critical Reviews in Microbiology, May 1973, pp. 553-623, Esp., pp. 589-590, F.N. 391-404, Genetic Regulation, 599, F.N. 489-506, Oral Living Attenuated Cholera Mutant Vaccine.

Woodward et al., Proc. 11th Joint Conf. Cholera U.S.-Japan Medical Science Program (1975), 330-335, "Efficacy of a Live Oral Cholera Vaccine in Human Volunteers".

Chem. Abstracts, vol. 89 (1978)-vol. 56 (1962), Index Entry "Vibrio-Comma (Cholera), Eltor".

Chem. Abstracts, vol. 89 (1978)-vol. 56 (1962), Index Entry "Guanidine, 1 Methyl-3 nitro-1-nitroso".

C.A. 89:204042n, 1010c88:131408d, 166344g (1978), 87:63410a (1977) 81:35454a (1974).

C.A. 80:44287e (1974), 77:143756(b), (1972), 72:63879a (1970), 55:16676, 15583 (1961).

Finkelstein et al., J. Exp. Med. 130:185-202, (1969), "Pathogenesis of Experimental Cholera".

Nelson et al., Inf. & Immun. 14(2):527-547, Aug. 1976 "*Vibrio cholerae* Adherence and Colonization in Experimental Cholera: Electron Microscopic Studies".

WO80/02504, Published with Amended claims, Dec. 11, 1980, PCT/US80/00613, Oeschger; Max et al., "Genetically Attenuated Bacterial Vaccines with Multiple Mutations of the Same Phonotype".

Clements, J. D.; Finkelstein, R. A., "Demonstration of Shared and Unique Immunological Determinants in Entero Toxins from *Vibrio-cholerae* and *Escherichia-coli*", Infect. Immun. (Infib), V 22 (3), 1978, pp. 709-713, ISSN 00199567.

Clements, J. D.; Finkelstein, R. A., "Immunological Cross-Reactivity Between a Heat-Labile Entero Toxin(s) of *Escherichia-coli* and Subunits of *Vibrio-cholerae* Entero Toxin", Infect. Immun. (Infib), V 21 (3), 1978, pp. 1036-1040, ISSN 00199567.

Finkelstein, R. A.; Boesman-Finkelstein M., "Cholera and Related Diarrhoeas ('Turista')", Nature 275 (5677): 173-174, Sep. 78.

Klapper, David G.; Finkelstein, R. A.; Capra, J. Donald, "Subunit Structure and N-Terminal Amino Acid Sequence of the Three Chains of Cholera Enterotoxin", Immunochemistry (IMCHZ), V 13 (7), pp. 605-611, 1976.

Finkelstein, R. A., "Cholera Enterotoxin", Microbiology (Washington, D. C.), (MICRDG); pp. 236-241, 1975.

Finkelstein, R. A., "Cholera Enterotoxin (Choleragen)", Jpn. J. Med. Sci. Biol. (JJMCAQ), V 28 (1), pp. 76-78, 1975.

Finkelstein, R. A.; Boesman, Mary; Neoh, Sim Hee; LaRue, Michael K.; Delaney, Robert, "Dissociation and Recombination of the Subunits of the Cholera Enterotoxin (Choleragen)", J. Immunol. (JOIMA3), V 113 (1), pp. 145-150, 1974.

Holmes, R. K.; Vasil, M. L.; Finkelstein, R. A., "Isolation and Preliminary Characterization of Nontoxinogenic Mutants of *Vibrio-cholerae*", Abstr. Annu. Meet. Am. Soc. Microbiol (ASMAC), V 73, 1973:90.

Peterson, J. W.; Lo Spalluto, J. J.; Finkelstein, R. A., "Localization of Cholera Toxin In-Vivo", J. Infect. Dis. (JIDIA), V 126 (6), 1972, 617-628.

Finkelstein, R. A.; La Rue, M. K.; Lo Spalluto, J. J., "Properties of the Cholera Exo Entero Toxin Effects of Dispersing Agents and Reducing Agents in Gel Filtration and Electrophoresis", Infect. Immun. (Infib), V 6 (6), 1972, 934-944.

Fujita, K.; Finkelstein, R. A., "Anti Toxic Immunity in Experimental Cholera Comparison of Immunity Induced Per Orally and Parenterally in Mice", J. Infect. Dis. (JIDIA), V 125 (6), 1972: 647-655.

Finkelstein, R. A.; Fujita, K., "Per Orally Induced Anti Toxic Immunity Against Cholera", Fed. Proc. (FEPRA), V 31 (2), 1972: 802.

Finkelstein, R. A.; Lo Spalluto, J. J., "Crystalline Cholera Toxin and Toxoid", Science (Wash D.C.) (SCIEA), V 175 (4021), 1972: 529-530.

Lo Spalluto, J. J.; Finkelstein, R. A., "Chemical and Physical Properties of Cholera Exo-Entero-Toxin (Choleragen) and its Spontaneously Formed Toxoid (Choleragenoid)", Biochem. Biophys. ACTA (BBA-CAQ), V 257 (1), 1972: 158-166.

Finkelstein, R. A.; Fujita, Koichiro; Lo Spalluto, J. J., "Procholeragenoid. Aggregated Intermediate in the Formation of Choleragenoid", J. Immunol. (JDIMA3), V 107 (4), pp. 1043-1051, 1971.

Finkelstein, R. A.; Peterson, J. W.; Lo Spalluto, J. J., "Conversion of Cholera Exo-Enterotoxin (Choleragen) to Natural Toxoid (Choleragenoid)", J. Immunol., 106 3, pp. 868-871, 1971.

Finkelstein, R. A.; Lo Spalluto, J. J., "Production of Highly Purified Choleragen and Choleragenoid", J. Infec. Dis. 121 Suppl. S63-S72, 1970.

Finkelstein, R. A., "Role of Choleragen in the Pathogenesis and Immunology of Cholera", Tex. Rep. Biol. Med. 27 Suppl. 1 181-201, 1969.

Vasil, M. L.; Holmes, R. K.; Finkelstein, R. A., "Conjugal Transfer of a Chromosomal Gene Determining Production of Enterotoxin in *Vibrio cholerae*", Science, V 157, pp. 849-850, 1975.

Finkelstein, R. A.; Vasil, M. L.; Holmes, R. K., "Studies on Toxinogenesis in *Vibrio cholerae*. I. Isolation of Mutants with Altered Toxinogenicity", J. Infect. Dis. (JIDIA), V 129 (2), 1974, pp. 117-123.

Howard, Bruce D., "A Prototype Live Oral Cholera Vaccine", Nature, V 230, pp. 97-99, 1971.

Primary Examiner—Shep K. Rose

Attorney, Agent, or Firm—Arnold, White & Durkee

[57] **ABSTRACT**

Vibrio cholerae, Ogawa serotype, El Tor biotype, are subjected to the mutagenic N-methyl-N'-nitro-n-nitrosoguanidine (NTG). First generation mutants are screened for toxin production, and in particular the absence of "A" or enzymatically active subunit production and production of B (binding) subunit. Putative A^-B^+ mutants are again exposed to NTG and screened for the A^-B^+ characteristics. The formula of the native toxin molecule is usually $A^+B^+_{5-6}$, the formula for the molecule produced by the selected second generation mutant is $A^-B^+_{5-6}$. This mutant strain is used for production of a live attenuated vaccine which can be administered orally. The mutant has been found to induce immunity, in an experimental model system, against subsequent challenge with virulent cholera vibrios. Because of the immunologic relationship to other enterotoxins (such as the heat-labile enterotoxin of *Escherichia coli*), the mutant may also induce immunity to diarrheal diseases other than cholera. In fact, antiserum to the isolated toxin-related protein produced by the mutant has been shown to neutralize *E. coli* enterotoxin. The mutant may also be used for the production of "choleragenoid", the non-toxic, highly immunogenic B portion of the cholera enterotoxin (choleragen) without the complication of toxicity associated with the complete enterotoxin.

2 Claims, No Drawings

United States Patent [19]

Reusser

[11] **4,332,898**

[45] **Jun. 1, 1982**

[54] **HYBRID PLASMID AND PROCESS OF MAKING SAME**

[75] Inventor: **Fritz Reusser**, Portage, Mich.

[73] Assignee: **The Upjohn Company**, Kalamazoo, Mich.

[21] Appl. No.: **159,852**

[22] Filed: **Jun. 16, 1980**

Related U.S. Application Data

[63] Continuation-in-part of Ser. No. 152,347, May 22, 1980, abandoned.

[51] **Int. Cl.**[3] **C12N 15/00**

[52] **U.S. Cl.** **435/172**; 435/253; 435/317; 435/849

[58] **Field of Search** 435/317, 172, 253

[56] **References Cited**

PUBLICATIONS

Bolivar et al., Gene, 2 pp. 95-113 (1977).

Chakrabarty, Genetic Engineering, CRC Press Inc., pp. 83-111 (1978).

Primary Examiner—Alvin E. Tanenholtz

Attorney, Agent, or Firm—Roman Saliwanchik

[57] **ABSTRACT**

A novel chemical compound, plasmid pUC1021, which was constructed from *Bacillus megaterium* chromosomal DNA and plasmid pBR322. Hybrid plasmid pUC1021 contains a functional tet gene promoter, and, thus, is useful as a cloning vehicle in recombinant DNA work. For example, using well known DNA methodology, a desired gene, for example, the insulin gene, can be inserted into pUC1021 and the resulting plasmid can then be transformed into a suitable host microbe which, upon culturing, produces the desired insulin.

6 Claims, 1 Drawing Figure

United States Patent [19]
Manis et al.
[11] **4,332,900**
[45] **Jun. 1, 1982**

[54] **CONSTRUCTION OF CO-INTEGRATE PLASMIDS FROM PLASMIDS OF STREPTOMYCES AND ESCHERICHIA**

[75] Inventors: **Jack J. Manis**, Portage; **Sarah K. Highlander**, Oshtemo Township, Kalamazoo County, both of Mich.

[73] Assignee: **The Upjohn Company**, Kalamazoo, Mich.

[21] Appl. No.: **192,727**

[22] Filed: **Oct. 1, 1980**

[51] **Int. Cl.**[3] **C12N 15/00**; C12N 1/20; C12N 1/00; C12P 19/34

[52] **U.S. Cl.** **435/172**; 435/91; 435/253; 435/317; 435/820; 435/849

[58] **Field of Search** 435/172, 253, 68, 317

[56] **References Cited**

U.S. PATENT DOCUMENTS

4,237,224 12/1980 Cohen et al. 435/68
4,273,875 6/1981 Manis 435/253

OTHER PUBLICATIONS

Muray et al. in *Recombinant DNA and Gentic Experimentation.*
Morgan et al., (ed.) Pergamon Press, (1979), pp. 53-64.
Blattner et al., Science 196, 161, (1977).
Armstrong et al., Science 196, 172, (1977).
Bolivar, Gene 4, 121, (1978).

Primary Examiner—Alvin E. Tanenholtz
Assistant Examiner—James Martinell
Attorney, Agent, or Firm—Roman Saliwanchik

[57] **ABSTRACT**

Novel chemical compounds, recombinant plasmids pUC1019 and pUC-1020, which are obtained by covalent linkage of ca. 4.2 kb BclI restriction endonuclease fragment of the *Streptomyces espinosus* plasmid pUC6 into the BamHI endonuclease site of the E. coli plasmid pBR322. Plasmid pUC1024 is obtained by restructuring plasmid pUC1019. These plasmids are useful as cloning vehicles in recombinant DNA work. For example, using DNA methodology, a desired gene, for example, the insulin gene, can be inserted into the plasmids and the resulting plasmids can then be transformed into a suitable host microbe which, upon culturing, produces the desired insulin.

14 Claims, 5 Drawing Figures

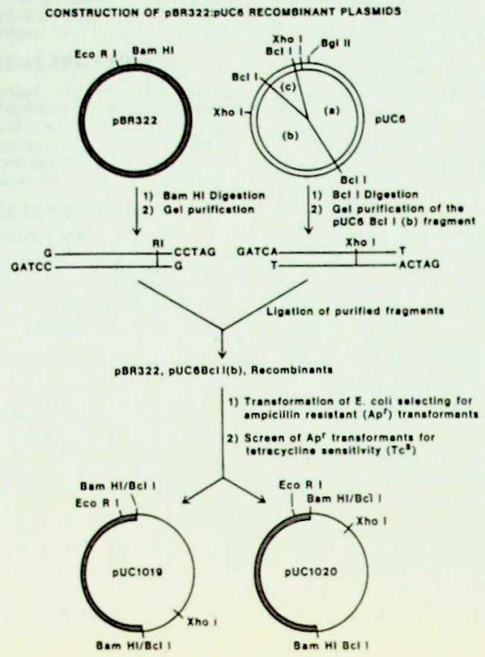

United States Patent [19]
Goldstein
[11] **4,332,901**
[45] **Jun. 1, 1982**

[54] **CLONING VECTOR**

[75] Inventor: **Richard N. Goldstein**, Cambridge, Mass.

[73] Assignee: **President and Fellows of Harvard College**, Cambridge, Mass.

[21] Appl. No.: **881,170**

[22] Filed: **Feb. 27, 1978**

[51] **Int. Cl.**[3] **C12N 7/00**; C12N 15/00

[52] **U.S. Cl.** **435/235**; 435/172; 435/317

[58] **Field of Search** 435/172, 235, 317

[56] **References Cited**

PUBLICATIONS

Lamanna et al., The Williams & Wilkins Co., pp. 723-727 (1965).
Metzler, Biochemistry, The Chemical Reactions of Living Cells, pp. 945-946.
Garland et al., Biochemistry of Genetic Engineering (1979).

Primary Examiner—Alvin E. Tanenholtz

[57] **ABSTRACT**

A cloning vector useful in recombining DNA (i.e. recombinant DNA studies) is made by mutagenesis of a satellite bacteriophage P4 wt or P4 vir_1 and subsequent separation and purification of the mutant progeny in a cesium chloride equilibrium density gradient. On such a cesium chloride gradient the mutant is found in a range of densities from 1.35 to 1.42 g/ml at 24° C. with peaks at about 1.42, 1.39, and 1.35 g/ml.

4 Claims, 1 Drawing Figure

United States Patent [19]
Cooney et al.
[11] **4,332,899**
[45] **Jun. 1, 1982**

[54] **PROCESS FOR PRODUCING MALTASE**

[75] Inventors: **Charles L. Cooney**, Brookline; **Eugene J. Schaefer**, Somerville, both of Mass.

[73] Assignee: **Massachusetts Institute of Technology**, Cambridge, Mass.

[21] Appl. No.: **177,709**

[22] Filed: **Aug. 13, 1980**

[51] **Int. Cl.**[3] **C12N 15/00**; C12N 9/26

[52] **U.S. Cl.** **435/172**; 435/201; 435/255; 435/940

[58] **Field of Search** 435/201, 255, 256, 172, 435/940

[56] **References Cited**

U.S. PATENT DOCUMENTS

4,071,407 1/1978 Hall ..... 435/201 X
4,081,326 3/1978 Hall ..... 435/201 X

OTHER PUBLICATIONS

Halvorson et al., in Biochimica et Biophysica Acta, vol. 30, pp. 28-40 (1958).
Halvorson et al. in Biochimica et Biophysica Acta, vol. 67, pp. 42-53 (1963).

Primary Examiner—Lionel M. Shapiro
Attorney, Agent, or Firm—Arthur A. Smith, Jr.; Paul J. Cook

[57] **ABSTRACT**

Maltase is produced by growing a mutant of the yeast strain *Saccharomyces italicus* capable of growing in a growth medium utilizing sucrose as the carbon source. Mutants of *Saccharomyces italicus* capable of utilizing sucrose as a carbon source also are provided.

7 Claims, No Drawings

United States Patent [19]

Ptashne et al.

[11] **4,332,892**

[45] **Jun. 1, 1982**

[54] **PROTEIN SYNTHESIS**

[75] Inventors: **Mark Ptashne; Gail D. Lauer; Thomas M. Roberts,** all of Cambridge, Mass.; **Keith C. Backman,** San Francisco, Calif.

[73] Assignee: **President and Fellows of Harvard College,** Cambridge, Mass.

[21] Appl. No.: **111,101**

[22] Filed: **Jan. 10, 1980**

Related U.S. Application Data

[63] Continuation of Ser. No. 3,102, Jan. 15, 1979, abandoned.

[51] **Int. Cl.**[3] **C12P 21/00**

[52] **U.S. Cl.** **435/68;** 435/70; 435/172

[58] **Field of Search** 435/172, 70, 71, 68

[56] **References Cited**

PUBLICATIONS

Chang et al., Nature, vol. 275, pp. 617-624, Oct. 19, 1978.

Itakura et al., Science, vol. 198, pp. 1056-1063 (1977).

Backman et al., Proc. Natl. Acad. Sci., USA, vol. 73, pp. 4174-4178 (1976).

Backman et al., Cell, vol. 13, pp. 65-71, Jan. 1978.

Primary Examiner—Alvin E. Tanenholtz

[57] **ABSTRACT**

This invention is a process to produce specific proteins coded for by eukaryotic (or prokaryotic) DNA in bacteria. The invention, which uses recombinant DNA techniques, produces proteins in their natural, functional state unencumbered by extraneous peptides.

6 Claims, No Drawings

United States Patent [19]

Nakano et al.

[11] **4,332,897**

[45] **Jun. 1, 1982**

[54] **NOVEL BACTERIOPHAGE AND METHOD FOR PREPARING SAME**

[75] Inventors: **Eiichi Nakano,** Saitama; **Narimasa Saito,** Noda; **Danji Fukushima,** Omiya, all of Japan

[73] Assignee: **Noda Institute for Scientific Research,** Noda, Japan

[21] Appl. No.: **895,602**

[22] Filed: **Apr. 12, 1978**

[30] **Foreign Application Priority Data**

Apr. 26, 1977 [JP] Japan 52/47409

[51] **Int. Cl.**[3] **C12N 15/00**

[52] **U.S. Cl.** **435/172;** 435/238; 435/253; 435/235; 435/317

[58] **Field of Search** 435/235, 236, 172, 253, 435/238, 317

[56] **References Cited**

U.S. PATENT DOCUMENTS

4,259,444 3/1981 Chakrabarty

OTHER PUBLICATIONS

Book: Author—Pelczar et al.; Title—*Microbiology,* Fourth Edition, McGraw-Hill Book Company; pp. 228-232.

Aritcle: Author—Kokisato et al.; Title—*Suppressor-Sensitive Mutants of Coliphage* ϕ80, Virology 34, (1968), pp. 637-649.

Rambach et al., Proc. Natl. Acad. Sci USA vol. 74 pp. 3927-3930 (Oct. 1974).

Lamanna et al., Basic Bacteriology, It's Biological and Chemical Background, 3rd Ed. pp. 723-727 (1965).

Metzler, Biochemistry. The Chemical Reactions of Living Cells, Academic Press Inc. pp. 945-946 (1977).

Scott et al., Molecular Cloning of Recombinant DNA pp. 133-153 (1977).

Lewin, Gene Expression-3 pp. 269, 270, 879, 886-901 (1977).

Murray et al., Nature vol. 251 pp. 476-481 Oct. 11, 1974.

Primary Examiner—Alvin E. Tanenholtz

Attorney, Agent, or Firm—Schuyler, Banner, Birch, McKie & Beckett

[57] **ABSTRACT**

A novel bacteriophage whose DNA molecule has endonuclease-sensitivity only in the DNA region carrying genetic information for the production of phage coat proteins can be obtained by isolating an endonuclease-resistant mutant from one of the lambdoid bacteriophages and mating the resulting bacteriophage with a lambdoid phage having endonuclease-sensitivity in the DNA region carrying genetic information for the production of coat proteins.

17 Claims, No Drawings

United States Patent [19]

Rosenberg

[11] **4,332,893**

[45] **Jun. 1, 1982**

[54] **PROCESS FOR THE PRODUCTION OF AN INSULIN-PRODUCING CELL LINE OF PANCREATIC BETA CELLS**

[76] Inventor: **Ralph A. Rosenberg,** 124 Johnson St., Apt. 1-B, Highland Park, N.J. 08904

[21] Appl. No.: **159,450**

[22] Filed: **Jun. 13, 1980**

[51] **Int. Cl.**[3] **C12N 5/02;** C12P 21/00; C12N 15/00

[52] **U.S. Cl.** **435/68;** 435/235; 435/240; 435/241; 435/172; 435/948

[58] **Field of Search** 435/68, 172, 241, 238, 435/948, 235, 239, 240, 236

[56] **References Cited**

U.S. PATENT DOCUMENTS

3,093,831 6/1963 Jordan 3/1

4,082,613 4/1978 Thirumalacher et al. ..... 435/172 X

FOREIGN PATENT DOCUMENTS

467 7/1979 World Intellectual Prop 435/172

OTHER PUBLICATIONS

Magun et al., *Chemical Abstracts,* 87:51327r, 313 (1977).

Altaner et al., Carcinogenesis by RNA Sarcoma Viruses, Virology 40 118-134, (1970).

Balduzzi, Cooperative Transformation Studies with Temperature Sensitive Mutants . . . J. Virology 18:332-342, (Apr. 1976).

Biquard et al., Characteristics of a Conditional Mutant of Rous Sarcoma Virus . . . Virology 47:444-455, (1972).

Graf et al., Differential Expression of Transformation of Rat and Chicken Cells Infected with an Avian Sarcoma Virus ts Mutant, Virology 56:369-374, (1973).

Hayward et al., Detection of Avian Tumor Virus RNA . . . J. Virology 11:157-167, (Feb. 1973).

Holtzer et al., Effect of Oncogenic Virus on Muscle Differentiation, Proc. Nat. Acad. Sa. U.S.A. 72:4051-4055, (1975).

Kobayashi et al., Induction of DNA Synthesis in Terminally Differentiated Myotubes . . . Proc. Nat. Acad. Sci. USA 75:5501-5505, (1978).

Kostianovsky et al., Monolayer Cell Culture of Adult Rat Islets of Langerhans, Diabetologia 10:337-344, (1974).

Lacy et al., Method for the Isolation of Intact Islets of Langerhans from The Rat Pancreas, Diabetes 16:35-39, (Jan. 1967).

Morgan et al., Immunoassay of Insulin, Diabetes 12:115-126, (Mar.-Apr. 1963).

Neisor et al., Establishment of Rat Pancreatic Endocrine Cell Lines by Infection with Simian Virus 40, Biochem. J. 178:559-568, (1979).

Ono et al., Long-Term Culture of Pancreatic Islet Cells, In Vitro 15:95-102, (1979).

Sun et al., Insulin Secretion from a Continuously Subcultivatable Isolate Derived from Foetal Pancreata Beta Cells, Biochem. & Biophys. Res. Comm. 79:195-289, (1977).

Weiss et al., Induction of Avian Tumor Viruses in Normal Cells . . . Virology 46:920-938, (1971).

Wyke, Temperature Sensitive Mutants of Avian Sarcoma Viruses, Biochim et Biophys. Acta, (1975).

Primary Examiner—Esther M. Kepplinger

Attorney, Agent, or Firm—Sixbey, Friedman & Leedom

[57] **ABSTRACT**

A process for producing an insulin-producing conditionally transformed pancreatic cell line is provided. The process of the present invention comprises the steps of preparing and culturing a population of insulin-producing pancreatic beta cells, preparing and culturing a suitable strain of Rous sarcoma virus containing a temperature sensitive lesion in the viral transforming or sarc gene, and infecting the insulin-producing pancreatic cells with the temperature sensitive virus. The infected pancreatic cells are conditionally transformed by the temperature-sensitive virus to provide an insulin-producing system especially suited for both in vitro and in vivo application. Methods for evaluating the safety of the system for application in vivo are also disclosed.

16 Claims, No Drawings

United States Patent [19]
Yukawa et al.
[11] **4,326,029**
[45] **Apr. 20, 1982**

[54] **PROCESS FOR PRODUCTION OF L-ASPARTIC ACID**

[75] Inventors: **Hideaki Yukawa; Terukazu Nara; Yoshihiro Takayama**, all of Ibaraki, Japan

[73] Assignee: **Mitsubishi Petrochemical Co., Ltd.**, Tokyo, Japan

[21] Appl. No.: **177,044**

[22] Filed: **Aug. 11, 1980**

[30] **Foreign Application Priority Data**

Aug. 10, 1979 [JP] Japan 54/101820

[51] **Int. Cl.**[3] **C12P 13/20**
[52] **U.S. Cl.** **435/109**; 435/172; 435/232; 435/840
[58] **Field of Search** 435/109, 172, 116, 232

[56] **References Cited**

U.S. PATENT DOCUMENTS

3,907,641 9/1975 Nakayama et al. ..... 435/116 X
3,970,519 7/1976 Tsuchida et al. 435/116
4,000,040 12/1976 Tsuchida et al. 435/109

Primary Examiner—Lionel M. Shapiro
Attorney, Agent, or Firm—Sughrue, Mion, Zinn, Macpeak and Seas

[57] **ABSTRACT**

A process for producing L-aspartic acid economically and efficiently from fumaric acid or a salt thereof and ammonia or an ammonium salt using a cultured product obtained by aerobically culturing an microorganism belonging to the Genus Brevibacterium and having resistance to α-amino-n-butyric acid.

2 Claims, No Drawings

United States Patent [19]
Cox et al.
[11] **4,329,448**
[45] **May 11, 1982**

[54] **MICROBIAL HETEROPOLYSACCHARIDE**

[75] Inventors: **Roger B. Cox**, Reading; **David C. Steer**, Wirral, both of England

[73] Assignee: **Lever Brothers Company**, New York, N.Y.

[21] Appl. No.: **166,220**

[22] Filed: **Jul. 7, 1980**

[30] **Foreign Application Priority Data**

Jul. 10, 1979 [GB] United Kingdom 7924040
Dec. 20, 1979 [GB] United Kingdom 7943878

[51] **Int. Cl.**[3] **C08B 37/00**
[52] **U.S. Cl.** ..... **536/123**; 536/114; 435/104; 435/172; 426/658; 426/573; 424/49; 252/8.55 R; 252/174.17; 252/174.23; 526/200; 524/29
[58] **Field of Search** 536/1, 4, 114; 435/101, 435/104

[56] **References Cited**

U.S. PATENT DOCUMENTS

3,963,832 6/1976 Hashimoto 424/56

FOREIGN PATENT DOCUMENTS

42-7600 3/1967 Japan .
1357323 6/1974 United Kingdom .

OTHER PUBLICATIONS

Ninomiya, E. and Kizake, T., Die Angewandte Makromolekulare Chemie, vol. 6, pp. 179–185, 1969.
Chemical Abstracts, vol. 88, Abstract No. 62550e, p. 406, 1978.
Chemical Abstracts, vol. 49, Abstract No. 6375g, 955.
Chemical Abstracts, vol. 91, Abstract No. 3921r, p. 382, 1979.
Chemical Abstracts, vol. 72, Abstract No. 129529v, p. 87, 1970.
Chemical Abstracts, vol. 43, Abstract No. 9153i, 1949.
Chemical Abstracts, vol. 93, Abstract No. 43943x, p. 712, 1980.
Jeanes, A., Polymer Science and Technology, vol. 2, pp. 227–241, 1973.
Jeanes, A., Journal of Polymer Science, Part C: Polymer Symposia, No. 45, pp. 209–227, 1974.
Chemical Abstracts, vol. 52, Abstract No. 8269d, 1958.
Kelco Corp. Trade Brochure, pp. 1–36, 1976.

Primary Examiner—Blondel Hazel
Attorney, Agent, or Firm—Irving N. Feit; James J. Farrell; Melvin H. Kurtz

[57] **ABSTRACT**

An heteropolysaccharide known as Biopolymer PS 87 comprises glucose, galactose, mannose, glucuronic acid and fucose. Biopolymer PS 87 is pseudoplastic, has a consistency at 20° C. of at least 150 poise and a yield stress value at 20° C. of at least 30 dynes/cm^2. Biopolymer PS 87 is synthesised by a strain of *Bacillus polymyxa* or a genetically similar micro-organism and has many domestic and industrial uses as a suspending agent or thickener.

6 Claims, No Drawings

United States Patent [19]
Hung et al.
[11] **4,331,589**
[45] **May 25, 1982**

[54] **DEOXYRIBONUCLEIC ACID SYNTHESIS USING BINDING PROTEIN EXTRACTED FROM CHICK EMBRYO FIBROBLASTS**

[75] Inventors: **Paul P. Hung**, Waukegan; **Shaw-Guang Lee**, Libertyville, both of Ill.

[73] Assignee: **Abbott Laboratories**, North Chicago, Ill.

[21] Appl. No.: **254,726**

[22] Filed: **Apr. 16, 1981**

Related U.S. Application Data

[60] Continuation-in-part of Ser. No. 112,267, Jan. 5, 1980, abandoned, which is a division of Ser. No. 963,245, Nov. 22, 1978, Pat. No. 4,224,408.

[51] **Int. Cl.**[3] **C07G 7/00**
[52] **U.S. Cl.** ..... **260/112 R**; 435/91
[58] **Field of Search** ..... 260/112 R; 435/91

[56] **References Cited**

PUBLICATIONS

The Proteins, Neurath, vol. III, 1965, pp. 20, 23 and 80–82.
Proc. Natn. Acad. Sci. USA 70, 230–234, 1973, Grandgenett et al.
A Lab Manual of Analytical Methods of Protein Chemistry, vol. I, Alexander et al., pp. 67, 73–74 and 76–78, 1960.
Nature, vol. 259, No. 5543, pp. 499–502, Feb. 12, 1976, Hung et al.
Nature, vol. 270, No. 5635, pp. 366–369, Nov. 24, 1977, Lee et al.

Primary Examiner—Howard E. Schain
Attorney, Agent, or Firm—Gildo E. Fato; Robert L. Niblack

[57] **ABSTRACT**

Described is a method of obtaining complete copying of the entire length of single stranded ribonucleic acid (RNA) into its complementary deoxyribonucleic acid (cDNA) by reverse transcription using binding protein. The method can be used in recombinant DNA research to copy total messenger RNA into DNA.

1 Claim, 1 Drawing Figure

United States Patent [19]
Scheit et al.
[11] **4,331,764**
[45] **May 25, 1982**

[54] **SEMINAL PLASMA RIBONUCLEASE AND METHOD FOR ITS RECOVERY**

[75] Inventors: **Karl H. Scheit**, Göttingen, Fed. Rep. of Germany; **Ergam R. S. P. Reddy**, Hyderabad, India; **Tangirala R. Murti**, Hyderabad, India; **Madhusudan W. Pandit**, Hyderabad, India; **Pushpa M. Bhargava**, Hyderabad, Anoh, India

[73] Assignee: **Max-Planck-Gesellschaft**, Göttingen, Fed. Rep. of Germany

[21] Appl. No.: **134,042**

[22] Filed: Mar. 26, 1980

[30] Foreign Application Priority Data

Mar. 26, 1979 [DE] Fed. Rep. of Germany 2911867

[51] **Int. Cl.**[3] **C12N 9/22**
[52] **U.S. Cl.** **435/199**; 435/6; 435/172
[58] **Field of Search** 435/199

[56] **References Cited**

PUBLICATIONS

Methods in Enzymology, vol. 6, pp. 828–829, (1963).

Primary Examiner—Lionel M. Shapiro
Attorney, Agent, or Firm—Felfe & Lynch

[57] **ABSTRACT**

The new enzyme, seminal plasma ribonuclease, has a content of 1 mole of cysteine per mole, a K_M of 0.42 mM against poly-r-U, a K_M of 0.51 mM against poly-r(A-U) transcript, and is inactive against native RNA. It is obtained either by placing dialyzed seminal plasma on an anion exchanger and then on a cation exchanger and purifying the fraction not adsorbed on the cation exchanger by affinity chromatography, after a gel chromatography step if desired, or by subjecting it directly to affinity chromatography, a support material being used for the affinity chromatography which bears native RNA or a non-hydrolyzable analog of the enzyme substrate.

4 Claims, 2 Drawing Figures

United States Patent [19]

Murillo Araujo et al.

[11] **4,318,987**

[45] **Mar. 9, 1982**

[54] **β-CAROTENE PRODUCING STRAINS OF THE FUNGUS PHYCOMYCES BLAKESLEENUS**

[76] Inventors: **Francisco J. Murillo Araujo**, C/Turdetania, 3-1°C; **Isabel López Calderon**, C/Virgen de la Antigua, 20, 1°A; **Isabel Lopez Díaz**, C/Gerona, 21, 3°A; **Enrique Cerdá Olmedo**, C/Avd. Reina Mercedes, 27, 6°D, all of Sevilla, Spain

[21] Appl. No.: **94,923**

[22] Filed: **Nov. 16, 1979**

[51] **Int. Cl.**[3] **C12N 15/00**; C12P 23/00; C12N 1/14; C12R 1/645

[52] **U.S. Cl.** **435/172**; 435/67; 435/254; 435/911

[58] **Field of Search** 435/172, 67, 911, 254

[56] **References Cited**

U.S. PATENT DOCUMENTS

2,820,742	1/1958	Pontecorvo et al.	435/172
2,890,989	6/1959	Anderson	435/254
3,330,737	7/1967	Marnati et al.	435/67
3,579,424	5/1971	Purcell et al.	435/67

OTHER PUBLICATIONS

Murillo et al., "Regulation of Carotene Synthesis in Phycomyces", *Molec. gen. Genet.*, vol. 148, (1976), pp. 19–24.

Cerda-Olmedo et al., "Genetic Classification of the Lethal Effects of Various Agents on Heterokaryotic Spores of Phycomyces", *Mutation Res.*, vol. 9, (1970), pp. 369–384.

Ootaki, "A New Method for Heterokaryons Formation in Phycomyces", *Molec. gen. Genet.*, vol. 121, (1973), pp. 49–56.

Heisenberg et al., "Segregation of Heterokaryons in the Asexual Cycle of Phycomyces", *Molec. Gen. Genetics*, vol. 102, (1968), pp. 187–195.

Righelato, "Growth Kinetics of Mycelial Fungi", *The Filamentous Fungi*, vol. 1, Smith et al. ed., Edward Arnold Ltd., London, (1975), pp. 116, 117.

Goodwin, Carotenoids", *The Filamentous Fungi, vol. II, Smith et al. ed., Edward Arnold Ltd., London, (1976), pp. 423–444.*

Ende, "Sexual Morphogensis in the Phycomycetes", *The Filamentous Fungi*, vol. III, Smith et al. ed., Edward Arnold Ltd., London, (1976), pp. 257–274.

Primary Examiner—Thomas Wiseman
Attorney, Agent, or Firm—Wenderoth, Lind & Ponack

[57] **ABSTRACT**

This invention refers to the obtention of strains of the fungus *Phycomyces blakesleeanus* accumulated by the β-carotene pigments in amounts which permit the use of these strains in the production on an industrial scale of said pigment. By genetic manipulations, strains simultaneously and constitutively incorporating various stimulating effects have been isolated. The resulting strains produce β-carotene in a proportion of approximately 2.5% of its dry weight, which constitutes almost 1000 times more than that which the natural microorganism would produce under the same conditions. This production level, together with the simplicity in cultivating and manipulating same, makes them interesting in the development of an industrial process for producing β-carotene by fermentation. The β-carotene produced by fermentation, besides its low cost, would have the advantage of not being contaminated with the reagents and catalysts used in the organic synthesis.

2 Claims, No Drawings

United States Patent [19]

Hill et al.

[11] **4,320,195**

[45] **Mar. 16, 1982**

[54] **STEROID PRODUCTION**

[75] Inventors: **Frank Hill**, Mettmann-Obschwarzbach; **Wolfgang Preuss**, Monheim; **Joachim Schindler**, Hilden; **Rolf Schmid**, Dusseldorf; **Alfred Struve**, Hilden, all of Fed. Rep. of Germany

[73] Assignee: **Henkel Kommanditgesellschaft auf Aktien**, Duesseldorf, Fed. Rep. of Germany

[21] Appl. No.: **29,415**

[22] Filed: **Apr. 12, 1979**

[30] **Foreign Application Priority Data**

Apr. 17, 1978 [AT] Austria 2662/78

[51] **Int. Cl.**[3] **C12P 33/16**; C12N 15/00; C12N 1/20; C12R 1/15

[52] **U.S. Cl.** **435/55**; 435/52; 435/54; 435/56; 435/172; 435/253; 435/843

[58] **Field of Search** 435/55, 172, 253, 54, 435/52, 56, 843

[56] **References Cited**

U.S. PATENT DOCUMENTS

4,029,549	6/1977	Antosz et al.	435/55
4,214,052	7/1980	Woucha et al.	435/55

FOREIGN PATENT DOCUMENTS

2408621	7/1979	France	435/55

Primary Examiner—Thomas Wiseman
Attorney, Agent, or Firm—Forrest L. Collins; Patrick J. Span

[57] **ABSTRACT**

A process for the production of useful steroids obtained by side chain degradation of sterol source materials through the use of microorganisms is described.

17 Claims, No Drawings

United States Patent [19]

Debabov et al.

[11] **4,321,325**

[45] **Mar. 23, 1982**

[54] **PROCESS FOR PRODUCING L-THREONINE**

[76] Inventors: **Vladimir G. Debabov**, ulitsa Miklukho-Maklaya, 43, kv. 57; **Nelli I. Zhdanova**, Leningradskoe shosse, 112, korpus 3, kv. 748; **Alexandr K. Sokolov**, Levshinsky, Maly pereulok, 14/9, kv. 113; **Vitaly A. Livshits**, ulitsa Kirovogradskaya, 24, korpus 3, kv. 8; **Jury I. Kozlov**, Yasenevo, Vtoroi mikroraion, korpus 3, kv. 178; **Evgeny M. Khurges**, ulitsa Tikhvinskaya, 1/13, kv. 16; **Nikolai K. Yankovsky**, ulitsa Radischevskaya, 13/15, kv. 59; **Mikhail M. Gusyatiner**, ulitsa Chertanovskaya, 8, korpus 1, kv. 66; **Albert F. Sholin**, Teply Stan, 1a mikroraion, korpus 18, kv. 100; **Viktor P. Antipov**, Suschevsky val, 22, kv. 28; **Tamara M. Pozdnyakova**, ulitsa Dorozhnaya, 20, korpus 3, kv. 50, all of Moscow, U.S.S.R.

[21] Appl. No.: **133,284**

[22] Filed: **Mar. 24, 1980**

[30] **Foreign Application Priority Data**

Jul. 13, 1978 [SU] U.S.S.R. 2781356

[51] **Int. Cl.**[3] **C12P 13/08**; C12N 15/00

[52] **U.S. Cl.** **435/115**; 435/172; 435/849

[58] **Field of Search** 435/115, 172

[56] **References Cited**

U.S. PATENT DOCUMENTS

3,711,375	1/1973	Nakayama et al.	435/115
4,237,224	12/1980	Cohen et al.	435/172

Primary Examiner—Lionel M. Shapiro
Attorney, Agent, or Firm—Steinberg & Raskin

[57] **ABSTRACT**

The process for producing L-threonine consists in that there is cultivated a producer of L-threonine in the capacity of which is used the *Escherichia coli* strain VNIIgenetika M-1 deposited in the Central museum of commercial microorganisms under the All-Union Research Institute for Genetics and Selection of Commercial Microorganisms at a registration No. IIMIIB-1856. The above strain has been selected on the basis of natural variability of the *Escherichia coli* strain VNIIgenetika VL 334/p YN7), obtained by virtue of the genetic engineering techniques through increasing the dose of mutant genes capable of a higher rate of L-threonine production, by introducing a multicopy hydrid plasmid carrying said genes, into a mutant recipient strain. The abovesaid producer is cultivated on a nutrient medium, containing sources of carbon, nitrogen, and some mineral salts in the presence of an antibiotic penicillin, the resultant biomass being then separated from the culture fluid, whereupon the end product is isolated.

4 Claims, No Drawings

United States Patent [19]

Hillman

[11] **4,324,860**

[45] **Apr. 13, 1982**

[54] **LACTATE DEHYDROGENASE MUTANTS OF *STREPTOCOCCUS MUTANS***

[75] Inventor: **Jeffrey D. Hillman**, Jamaica Plain, Mass.

[73] Assignee: **Forsyth Dental Infirmary for Children**, Boston, Mass.

[21] Appl. No.: **949,371**

[22] Filed: **Oct. 6, 1978**

Related U.S. Application Data

[62] Division of Ser. No. 880,499, Feb. 23, 1978, Pat. No. 4,133,875.

[51] **Int. Cl.**[3] **C12N 15/00**

[52] **U.S. Cl.** **435/172**; 435/253; 435/885

[58] **Field of Search** 435/172, 253, 885

[56] **References Cited**

U.S. PATENT DOCUMENTS

3,890,200	6/1975	Jordan et al.	435/253

Primary Examiner—Alvin E. Tanenholtz
Attorney, Agent, or Firm—Richard P. Crowley

[57] **ABSTRACT**

Mutant strains have been isolated from *Streptococcus mutans* strain BHT-2(str) which are characterized by a single point mutation in the structural gene for the enzyme, L(+) lactate dehydrogenase, this enzyme being normally responsible for lactic acid production by this bacterium. *Streptococcus mutans* is believed to be a principal pathogen in dental caries, a disease characterized by the dissolution of the mineral portion of the tooth caused by acid resulting from the interaction of bacteria on the tooth surface with carbohydrates. The mutant strains of the invention will be found useful as prototype nonvirulent effector strains in controlling the incidence and severity of dental caries.

15 Claims, No Drawings

United States Patent [19]
Khachatourians
[11] **4,311,797**
[45] **Jan. 19, 1982**

[54] **ANUCLEATED LIVE *E. COLI* VACCINE**

[75] Inventor: **George G. Khachatourians**, Saskatoon, Canada

[73] Assignee: **University of Saskatchewan**, Saskatoon, Canada

[21] Appl. No.: **76,610**

[22] Filed: **Sep. 18, 1979**

[51] **Int. Cl.**[3] **C12N 15/00**
[52] **U.S. Cl.** **435/172**; 435/253; 435/820; 424/92

[58] **Field of Search** 435/172, 253

[56] **References Cited**

U.S. PATENT DOCUMENTS

3,839,556 10/1974 Mebus et al. 424/89
3,907,987 9/1975 Wilson 424/92

OTHER PUBLICATIONS

Veterinary Medicine/Small Animal Clinician, Mar. 1978, p. 371.
Cohen et al, Proc. Nat. Acad. Sci., vol. 61, pp. 61–68, (1968).
Veterinary Infectious Disease Organization, Viewing VIDO, No. 8 (Saskatoon, Saskatchewan, Canada, Mar. 1978).
Bonner et al, Clinical Research, vol. 24:1, p. 24A, (Jan. 1976).
Coyne et al, Infection and Immunity, vol. 12, No. 5, pp. 1189–1194, (Nov. 1975).
Acres, Veterinary Infectious Disease Organization Annual Report, Apr. 1–1977 to Mar. 31, 1978, (pp. 10–12).
Chakrabarty, Genetic Engineering, CRC Press, p. 13, (1978).
Tankersley et al, Proc. Soc. for Exptl. Biology and Medicine, 145, pp. 802–805, (1974).
Lewin, Gene Expression, John Wiley & Sons, vol. 3, pp. 140–142, (1977).
Beale et al, Extranuclear Genetics, University Park Press, pp. 71 and 72 (1978).

Primary Examiner—Alvin E. Tanenholtz
Attorney, Agent, or Firm—Depaoli & O'Brien

[57] **ABSTRACT**

An *E. coli* strain producing metabolically active but non-reproductive, anucleated live cells, which contain the K99 surface antigen, is obtained by transferring the K99 plasmid from a K99+ entero pathogenic *E. coli* strain into an *E. coli* strain which generates progeny of cells that lack the ability to multiply. From the resulting *E. coli* strain a "live" vaccine is prepared. Separation and purification of the anucleated live cells from growing cells is the basis for the "live" and chemically and/or physically unmodified vaccine. The vaccine induces the production of antibodies against growing and infective enteropathogenic K99+ *E. coli* in cattle and is, thus effective against coliform enteritis.

23 Claims, No Drawings

United States Patent [19]
Leibowitz et al.
[11] **4,315,852**
[45] **Feb. 16, 1982**

[54] **EXTRACTION OF INTERFERON FROM BACTERIA**

[75] Inventors: **Paul Leibowitz**, Hackensack; **Marvin J. Weinstein**, East Brunswick, both of N.J.

[73] Assignee: **Schering Corporation**, Kenilworth, N.J.

[21] Appl. No.: **221,135**

[22] Filed: **Dec. 29, 1980**

Related U.S. Application Data

[63] Continuation-in-part of Ser. No. 210,426, Nov. 26, 1980.

[51] **Int. Cl.**[3] **A61K 45/02**
[52] **U.S. Cl.** ..... **260/112 R**; 424/85; 424/87

[58] **Field of Search** ..... 260/112 R, ; 424/85

[56] **References Cited**

U.S. PATENT DOCUMENTS

3,256,152 6/1966 Lampson ..... 424/85 X
3,265,581 9/1966 Fantes et al. 424/85
3,414,651 12/1968 Fantes 424/85
3,699,222 10/1972 Isaacs et al. 424/85
4,266,024 5/1981 Swetly et al. ..... 424/85 X

FOREIGN PATENT DOCUMENTS

2037296 9/1980 United Kingdom .

OTHER PUBLICATIONS

Nature, vol. 287, 193–197, (1980), Derynck et al.
Nature, vol. 284, 316–320, (1980), Nagata et al.
Science, vol. 209, 1343–1347, Streuli et al.

Primary Examiner—Howard E. Schain
Attorney, Agent, or Firm—Paul H. Ginsburg

[57] **ABSTRACT**

A method of extracting leucocyte interferon from interferon-expressing bacterial cells comprising acidifying a suspension of interferon-containing bacterial cells, removing substantially all of the suspension liquid from the cells, preparing a second suspension of the acidified cells, neutralizing said second suspension, separating the interferon containing liquid from the suspended cells, and extracting the interferon from said liquid.

8 Claims, No Drawings

United States Patent [19]
Clement et al.
[11] **4,318,929**
[45] **Mar. 9, 1982**

[54] **PROCESS FOR OBTAINING NEW STRAINS OF YEAST FOR BREAD-MAKING AND NOVEL STRAINS OF YEAST THUS PREPARED**

[75] Inventors: **Philippe Clement**, Roubaix; **Annie Loiez nee Hennette**, Lille, both of France

[73] Assignee: **Lesaffre et Cie**, Paris, France

[21] Appl. No.: **863,952**

[22] Filed: **Dec. 23, 1977**

[30] **Foreign Application Priority Data**

Dec. 24, 1976 [GB] United Kingdom 54172/76

[51] **Int. Cl.**[3] **A23L 1/28**; C12N 1/18
[52] **U.S. Cl.** **426/62**; 435/172; 435/256

[58] **Field of Search** 435/172, 255, 256, 260, 435/940, 942; 426/62, 60, 549

[56] **References Cited**

U.S. PATENT DOCUMENTS

3,930,946 1/1976 Maldonado et al. 435/172
3,954,536 5/1976 Pacchetti et al. 435/172
3,993,783 11/1976 Langejan et al. 435/256
4,172,764 10/1979 Heslot et al. 435/172

FOREIGN PATENT DOCUMENTS

989247 4/1965 United Kingdom 435/172
1539211 1/1979 United Kingdom 435/172

Primary Examiner—Benoit Castel
Attorney, Agent, or Firm—Cushman, Darby & Cushman

[57] **ABSTRACT**

A complete and reproducible process for producing novel strains of yeast, comprises making a first screening test and at least one other screening test selected from a group of screening tests which do not resort to any measurement of gas release, selecting by means of said first and at least one other said screening test the desired strains from a group of diploid strains prepared previously either by hybridation, or by mutation of existing strains. The tests are as follows: A first test consists of measuring the average multiplication coefficient of a given strain by following the optical density variation of a standard medium seeded by a suspension of cells obtained from this strain. A second test consists of measuring in the same manner the average multiplication coefficient of the said strain in the presence of an inhibitor acid added to the standard medium. A third test consists of measuring the maltose adaptation of said strain in the presence of glucose by determining the amount of maltose subsisting in a standard medium after a known amount of glucose added to this medium has been completely consumed. A fourth test consists of measuring the invertase content of said strain. A fifth test consists of measuring the latent time of said strain. The hybridation can consist of systematic haploid crossings derived from quick Saccharomyces Cerevisiae strains adapted to maltose and haploids derived from very slow strains not adapted to maltose, but well adapted to sweet doughs and sometimes also to acid doughs.

35 Claims, No Drawings

United States Patent [19]
Clément et al.
[11] **4,318,930**
[45] **Mar. 9, 1982**

[54] **STRAINS OF YEAST FOR BREAD-MAKING AND NOVEL STRAINS OF YEAST THUS PREPARED**

[75] Inventors: **Philippe Clément**, Roubaix; **Annie Loiez née Hennette**, Lille, both of France

[73] Assignee: **Lesaffre et Cie**, Paris, France

[21] Appl. No.: **931,151**

[22] Filed: **Aug. 4, 1978**

Related U.S. Application Data

[63] Continuation-in-part of Ser. No. 863,952, Dec. 23, 1977.

[30] **Foreign Application Priority Data**

Dec. 24, 1976 [GB] United Kingdom 54172/76

[51] **Int. Cl.**[3] **A23L 1/28**; C12N 1/18
[52] **U.S. Cl.** **426/62**; 435/172; 435/256

[58] Field of Search 435/172, 255, 256, 260, 435/940, 942; 426/62, 60, 549

[56] **References Cited**

U.S. PATENT DOCUMENTS

3,930,946 1/1976 Maldonado et al. 435/172
3,954,536 5/1976 Pacchetti et al. 435/172
3,993,783 11/1976 Langejan et al. 435/256
4,172,764 10/1979 Heslot et al. 435/172

FOREIGN PATENT DOCUMENTS

989247 4/1965 United Kingdom 435/172
1539211 1/1979 United Kingdom 435/172

Primary Examiner—Benoit Castel
Attorney, Agent, or Firm—Cushman, Darby & Cushman

[57] **ABSTRACT**

A complete and reproducible process for producing novel strains of yeast, comprises making a first screening test and at least one other screening test selected from a group of screening tests which do not resort to any measurement of gas release, selecting by means of said first and at least one other said screening test the desired strains from a group of diploid strains prepared previously either by hybridation, or by mutation of existing strains. The tests are as follows: A first test consists of measuring the average multiplication coefficient of a given strain by following the optical density variation of a standard medium seeded by a suspension of cells obtained from this strain. A second test consists of measuring in the same manner the average multiplication coefficient of the said strain in the presence of an inhibitor acid added to the standard medium. A third test consists of measuring the maltose adaptation of said strain in the presence of glucose by determining the amount of maltose subsisting in a standard medium after a known amount of glucose added to this medium has been completely consumed. A fourth test consists of measuring the invertase content of said strain. A fifth test consists of measuring the latent time of said strain. The hybridation can consist of systematic haploid crossings derived from quick Saccharomyces Cerevisiae strains adapted to maltose and haploids derived from very slow strains not adapted to maltose, but well adapted to sweet doughs and sometimes also to acid doughs.

4 Claims, No Drawings

United States Patent [19]

Hershberger

[11] **4,322,497**

[45] **Mar. 30, 1982**

[54] **PROCESS FOR TRANSDUCING *ESCHERICHIA COLI* K12 χ1776**

[75] Inventor: **Charles L. Hershberger**, New Palestine, Ind.

[73] Assignee: **Eli Lilly and Company**, Indianapolis, Ind.

[21] Appl. No.: **911,852**

[22] Filed: **Jun. 2, 1978**

[51] **Int. Cl.**[3] **C12N 15/00**

[52] **U.S. Cl.** **435/172**; 435/849

[58] **Field of Search** 435/172

[56] **References Cited**

U.S. PATENT DOCUMENTS

4,190,495 2/1980 Curtiss 435/172

OTHER PUBLICATIONS

Curtiss et al., Miami Winter Symp. 1977, 13, Mol Cloning Recomb. DNA, pp. 99–114.

Derwent Abstract 25578A (Abstracting German Offenlegungsschrift 26 44 432.

Primary Examiner—Alvin E. Tanenholtz

Attorney, Agent, or Firm—Nancy J. Harrison; Arthur R. Whale

[57] **ABSTRACT**

A method of providing maximum frequencies of transduction with *Escherichia coli* strains, such as *E. coli* K12 χ1776, that are transduced poorly in the exponential growth phase, which comprises transducing the culture in the stationary phase of growth. *E. coli* K12 χ1776 strains modified by transduction using this method are useful as EK2 hosts for biological containment.

3 Claims, 1 Drawing Figure

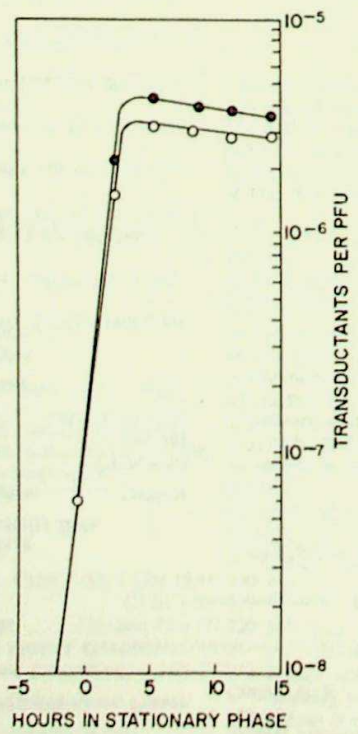

United States Patent [19]

Baxter et al.

[11] **4,322,499**

[45] **Mar. 30, 1982**

[54] **ADRENOCORTICOTROPIN-LIPOTROPIN PRECURSOR GENE**

[75] Inventors: **John D. Baxter; James L. Roberts; Peter H. Seeburg; Howard M. Goodman**, all of San Francisco, Calif.; **John Shine**, Curtin, Australia

[73] Assignee: **The Regents of the University of California**, Berkeley, Calif.

[21] Appl. No.: **972,430**

[22] Filed: **Dec. 22, 1978**

[51] **Int. Cl.**[3] **C12N 1/00**

[52] **U.S. Cl.** **435/317**; 435/68; 435/91; 435/172; 435/253

[58] **Field of Search** 435/172, 253, 317, 255

[56] **References Cited**

U.S. PATENT DOCUMENTS

4,237,224 12/1980 Cohen et al. 435/183

OTHER PUBLICATIONS

Seebring et al., Nature, vol. 270, pp. 486–494, Dec. 8, 1977.

Guillemin, Science, vol. 202, pp. 390–402, Oct. 27, 1978.

Roberts et al., Proc. Natl. Acad. Sci. USA, vol. 74, pp. 4826–4830, Nov. 1977.

Maxam et al., Proc. Natl. Acad. Sci. USA, vol. 74, pp. 560–584, Feb. 1977.

Heyneker, et al., Nature, vol. 263, pp. 748–752, (1976).

Itakura et al., Science 198, pp. 1056–1063, (1977).

Jacob et al., J. Mol. Biol. 31, pp. 704–719, (1965).

Li et al, Proc. Nat. Acad. Sci, USA, vol. 73, pp. 1145–1148, (1976).

Benzer et al., PNAS 48, pp. 1114–1121, (1962).

Chang et al., Proc. Natl. Acad. Sci. USA, vol. 75, pp. 361–365, Jan. 1978.

Chang et al., Nature, vol. 275, pp. 617–624, Oct. 19, 1978.

Herrlich et al., Methods in Enzymology, vol. 61, pp. 654–669, 1974.

Mains et al., Proc. Natl. Acad. Sci., vol. 74, pp. 3014–3018, Jul. 1977.

Mercereau-Puijalon et al., Nature 275, pp. 505–510, (1978).

Polisky et al., Proc. Natl. Acad. Sci. USA, vol. 73, pp. 3900 (1976).

Roberts et al., Biochemistry 17, pp. 3609–3618, (1978).

Roberts et al., Proc. Natl. Acad. Sci. USA, vol. 74, pp. 5300–5304, Dec. 1977.

Roberts et al., Crit. Rev. Biochem. 4, pp. 123–164, (1976).

Sanger et al., Proc. Natl. Acad. Sci. USA, vol. 74, pp. 5463–5467, Dec. 1977.

Scheller et al., Science, vol. 196, pp. 177–180, Apr. 1977.

Ullrich et al., Science, vol. 196, pp. 1313–1319, Jun. 1977.

Villa-Komaroff, et al., Proc. Natl. Acad. Sci., vol. 75, pp. 3727–3731, (Aug. 1978).

Primary Examiner—Alvin E. Tanenholtz

[57] **ABSTRACT**

A technique suitable for cloning a cDNA having a base sequence coding for the ACTH/LPH precursor is disclosed. The invention is exemplified by the cloning of a cDNA fragment comprising a base sequence coding for the endorphin region. The fragment, hereinafter termed the endorphin gene cDNA sequence, was obtained from cultured mouse pituitary tumor cells known to produce the ACTH/LPH precursor protein.

8 Claims, 3 Drawing Figures

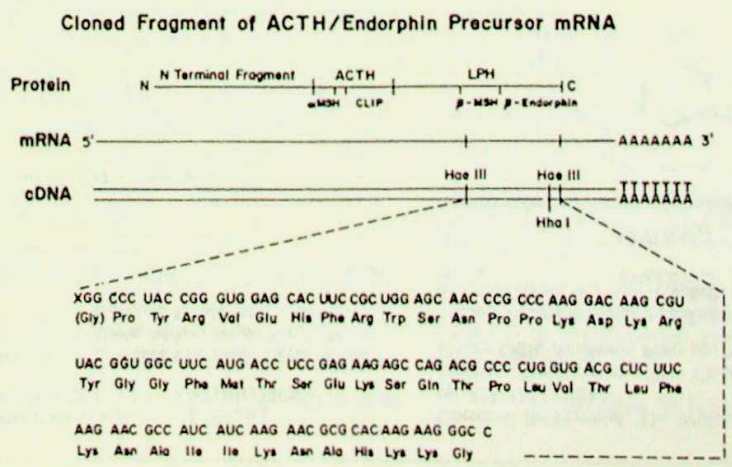

United States Patent [19]
Viza
[11] **4,316,962**
[45] **Feb. 23, 1982**

[54] **NOVEL CELL LINE**

[75] Inventor: **Dimitri Viza**, Bourg-la-Reine, France

[73] Assignee: **The International Institute of Differentiation Limited**, Guernsey, Channel Islands

[21] Appl. No.: **860,439**

[22] Filed: **Dec. 14, 1977**

[30] **Foreign Application Priority Data**

Dec. 16, 1976 [GB] United Kingdom 52675/76

[51] **Int. Cl.**[3] **C12N 5/02**
[52] **U.S. Cl.** **435/241**
[58] **Field of Search** 195/1.8; 435/241

[56] **References Cited**

PUBLICATIONS

Moore et al., Cancer, vol. 19, No. 5 (May 1966), pp. 713-723.
Minowada et al., J. Nat. Can. Inst., vol. 49, No. 3, Sep. 1972, pp. 891-895.
Nilsson, Int. J. Cancer, vol. 7 (1971), pp. 380-396.
Paul, Cell & Tiss. Cult., Fift. Edit. 1975, pp. 25-39, 62, 63, 232-235, 466-470.
Slesinger et al., Chromosoma (Berl.), vol. 49 (1974), pp. 173-184.
Abercrombie et al., A Dictionary of Biology-Sixth Edit. (Penguin Books), pp. 110-111.
Moorhead et al., Experiment. Cell. Res., vol. 20 (1960), pp. 613-616.
Nilsson et al., Int. J. Cancer, vol. 8 (1971), pp. 443-450.
Moore, Methods in Cancer Res., Chap. X (1970), pp. 423-453.
Collins et al., Nature, vol. 270, Nov. 24, 1977, pp. 347-349.
Moore et al., J. Sur. Res. vol. 5, No. 6 (1965), pp. 270-282.
Zimmerman, Experiment Cell Res., vol. 20, pp. 540-547.
Schlesinger et al., Chem. Abst., vol. 82 (1975), pp. 122425f.
Slezinger et al., Chem. Abst., vol. 81 (1974), pp. 102410y.
Baumal et al., Nature New Biology, vol. 230 (Mar. 3, 1971), pp. 20-21.
Paltrowitz et al., Sinai Journ., vol. 38 (1971), pp. 284-292.
Moore et al., J.A.M.A., vol. 199, No. 8, Feb. 20, 1967, pp. 519-524.
Imamura et al., PSEBM, vol. 128 (1968), pp. 1179-1183.

Primary Examiner—Sam Rosen
Attorney, Agent, or Firm—Stevens, Davis, Miller & Mosher

[57] **ABSTRACT**

A cell line, identified by the reference LDV/7, was established from peripheral blood leucocytes of a 75 year old male volunteer, and may be propagated by culturing the cells in a suitable nutrient culture medium. The cell line may be used in the production of immunological material.

8 Claims, No Drawings

United States Patent [19]
Cassinelli et al.
[11] **4,309,503**
[45] **Jan. 5, 1982**

[54] **PREPARATION OF 11-DEOXY ANTHRACYCLINE ANTIBIOTICS**

[75] Inventors: **Giuseppe Cassinelli**, Pavia; **Arpad Grein**, Milan; **Sergio Merli**, Milan; **Giovanni Rivola**, Milan, all of Italy

[73] Assignee: **Farmitalia Carlo Erba S.p.A.**, Milan, Italy

[21] Appl. No.: **82,294**

[22] Filed: **Oct. 5, 1979**

Related U.S. Application Data

[62] Division of Ser. No. 9,650, Feb. 5, 1979, Pat. No. 4,247,545.

[30] **Foreign Application Priority Data**

Feb. 17, 1978 [GB] United Kingdom 5246/78

[51] **Int. Cl.**[3] **C12P 19/56**
[52] **U.S. Cl.** ..... **435/78**; 435/172; 435/253; 536/17 A; 424/181
[58] **Field of Search** 435/78, 172, 253

[56] **References Cited**

U.S. PATENT DOCUMENTS

3,686,163 8/1972 Arcamone et al. 435/78
3,993,544 11/1976 Demain et al. 435/172

OTHER PUBLICATIONS

Lamanna et al., Basic Bacteriology, Its Biological and Chemical Background, The Williams & Williams Co., pp. 723-727 (1965).
Metzler, Biochemistry, The Chemical Reactions of Living Cells, Academic Press pp. 945 & 946 (1977).

Primary Examiner—Alvin E. Tanenholtz
Attorney, Agent, or Firm—Hubbell, Cohen, Stiefel & Gross

[57] **ABSTRACT**

Anthracycling antibiotics of the formula:

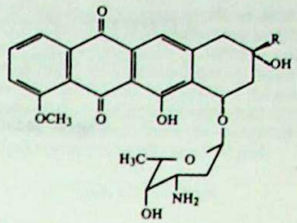

wherein R is —CO—CH_2OH, —CHOH—CH_3, —CO—CH_3 or —CH_2—CH_3 having antitumor and antibacterial activity are prepared by culturing a new mutant strain of microorganism designated as *Macromonospora peucetica* sp. *nova* and which has been deposited with the American Type Culture Collection under numbr No. 31366 ATCC.

6 Claims, No Drawings

United States Patent [19]
Arimura et al.
[11] **4,313,938**
[45] **Feb. 2, 1982**

[54] **INTERFERON INDUCER AND METHOD OF PREPARING SAME**

[75] Inventors: **Hirofumi Arimura**, Toyonaka; **Masanori Nagai**, Kyoto; **Takeshi Yamauchi**, Osaka; **Tsutomu Kitagawa**, Neyagawa; **Tadakazu Suyama**, Kyoto, all of Japan

[73] Assignee: **The Green Cross Corporation**, Osaka, Japan

[21] Appl. No.: **58,361**

[22] Filed: **Jul. 18, 1979**

[30] **Foreign Application Priority Data**

Jul. 28, 1978 [JP] Japan 53/92212

[51] **Int. Cl.**[3] **A01N 9/00**; C12P 19/34
[52] **U.S. Cl.** **424/180**; 424/85; 435/91; 435/194; 435/815; 435/816; 536/28; 435/948
[58] **Field of Search** 435/91, 92; 536/27, 536/28; 424/85, 200, 180

[56] **References Cited**

U.S. PATENT DOCUMENTS

3,819,482 6/1974 Vidaver et al. 435/91
4,082,613 4/1978 Thirumalachar et al. 435/172

OTHER PUBLICATIONS

Microbiology, Davis et al., Harper & Rowe, Publishers, pp. 1398-1405 (1968).
Methods in Enzymology, vol. XXX, Part F, Moldave et al., pp. 654-661 (1974).

Primary Examiner—Alvin E. Tanenholtz
Attorney, Agent, or Firm—Cushman, Darby & Cushman

[57] **ABSTRACT**

Double-stranded RNA synthesized using native human DNA as template is found to be an excellent interferon inducer with low toxicity in spite of homologous native to host cell. It is produced by reacting ATP, GTP, CTP and UTP with one another in the presence of a native human DNA as template by the catalytic action of an active RNA polymerase to form RNA and subjecting the resulting RNA to annealing by heating it at a temperature of 70° to 100° C. and gradually cooling to room temperature or below to form double-stranded regions between their molecules.

4 Claims, 4 Drawing Figures

United States Patent [19]
Sugimoto et al.
[11] 4,276,282
[45] Jun. 30, 1981

[54] INTERFERON AND PREPARATIONS CONTAINING INTERFERON

[75] Inventors: Kaname Sugimoto; Shokichi Yuen, both of Okayama, Japan

[73] Assignees: Ken Hayashibara, Okayama; Shin Ashida, Hyogo, both of Japan

[21] Appl. No.: 5,585

[22] Filed: Jan. 22, 1979

[30] Foreign Application Priority Data

Jan. 22, 1978 [JP] Japan 53-5368
Oct. 31, 1978 [JP] Japan 53-134026

[51] Int. Cl.[3] A61K 45/02; A61K 39/00
[52] U.S. Cl. 424/85; 435/68; 435/811
[58] Field of Search 424/85; 435/68, 811

[56] References Cited

PUBLICATIONS

Chemical Abstracts, vol. 89, 105634a, 1978.
Chemical Abstracts, vol. 82, 14962v, 1975.
Chemical Abstracts, vol. 83, 25879v, 1975.
Miyoshi, I., et al., Cancer, vol. 40, pp. 2999-3003, 1977.
Miyoshi, I., et al., Nature, vol. 267, pp. 843-844, 1977.
Strander, H., et al., J. of Clin. Microbiol., vol. 1, pp. 116-117, 1975.
Finter, "Interferons," 1966, pp. 263-266, North Holland Pub. Co.
Miyoshi et al., Reprint from "Nature," vol. 267, No. 5614 (1977), pp. 843-844.
Science, vol. 204, pp. 1184-1185, Editorial, 1979.
Proteins, Nucleic Acid and Enzyme, vol. 21, No. 4, pp. 616-643, "The Current Situation of the Maintenance and Preservation of Tissue Culture Cell Lines in Japan".

Primary Examiner—Delbert R. Philips
Assistant Examiner—Blondel Hazel
Attorney, Agent, or Firm—Browdy and Neimark

[57] ABSTRACT

The present invention relates to processes for an easily applicable industrial production of interferon and the possibilities of the products for preventing and treating interferonsensitive diseases.

The process easily produces a large amount of interferon and transplanting established human cells to other warm-blooded animals or inoculating the cells in a diffusion chamber and multiplying the cells therein while allowing the animals to supply the cells with their nutrient body fluids, then exposing in vivo or in vitro the resultant cells to the action of interferon inducer. The present invention is also based on the discovery that the interferon obtained by the present method is an effective and superior preparation for preventing and treating interferon-sensitive diseases.

8 Claims, No Drawings

United States Patent [19]
Srinivasan et al.
[11] 4,278,766
[45] Jul. 14, 1981

[54] MUTANT MICROORGANISMS USEFUL FOR THE PRODUCTION OF SINGLE CELL PROTEIN AND AMINO ACIDS

[75] Inventors: Vadake R. Srinivasan, Baton Rouge, La.; Ye-Chin Choi, New Haven, Conn.

[73] Assignee: Louisiana State University Foundation, Baton Rouge, La.

[21] Appl. No.: 849,695

[22] Filed: Nov. 8, 1977

Related U.S. Application Data

[63] Continuation-in-part of Ser. No. 718,974, Aug. 30, 1976, Pat. No. 4,104,124.

[51] Int. Cl.[3] C12N 1/20
[52] U.S. Cl. 435/253; 435/110; 435/115; 435/172; 435/252; 435/822
[58] Field of Search 435/110, 68, 115, 172, 435/252, 253, 822

[56] References Cited

U.S. PATENT DOCUMENTS

3,761,355 9/1973 Callihan et al. 435/68
4,062,727 12/1977 Srinivasan et al. ..... 435/252 X
4,104,124 8/1978 Srinivasan et al. 435/110

Primary Examiner—R. B. Penland
Attorney, Agent, or Firm—Llewellyn A. Proctor

[57] ABSTRACT

A biologically pure culture of cellulase-elaborating bacteria of mutant microorganisms of Cellulomonas (ATCC-21399) which have the ability to excrete L-glutamic acid or L-lysine, or both, when the mutant microorganisms are grown in a fermentation medium in the substantial absence of yeast extract on an assimilable source of carbon, and supplied with nitrogen and mineral nutrients, in the presence of oxygen at temperatures ranging from about 20° C. to about 40° C. The preferred mutant microorganisms are selected from the group consisting of: Cellulomonas sp. ATCC-21399 strain LC-10 (ATCC-31230), Cellulomonas sp. ATCC-21399 strain A^r-1 (ATCC-31231) and Cellulomonas sp. ATCC-21399 strain A^r-156 (ATCC-31232).

2 Claims, No Drawings

United States Patent [19]
Gallo
[11] 4,275,163
[45] Jun. 23, 1981

[54] CELLULASE-PRODUCING MICROORGANISM

[75] Inventor: Benedict J. Gallo, Natick, Mass.

[73] Assignee: The United States of America as represented by the Secretary of the Army, Washington, D.C.

[21] Appl. No.: 962,522

[22] Filed: Nov. 20, 1978

[51] Int. Cl.[3] C12N 9/42; C12N 15/00; C12R 1/885
[52] U.S. Cl. 435/209; 435/172; 435/254; 435/945
[58] Field of Search 435/209, 254, 945, 172

[56] References Cited

U.S. PATENT DOCUMENTS

3,734,831 5/1973 Hulme 435/209
3,972,775 8/1976 Wilke et al. ..... 435/209 X

FOREIGN PATENT DOCUMENTS

574471 9/1977 U.S.S.R. 435/209

OTHER PUBLICATIONS

Montenecourt et al., Applied and Environmental Microbiology, vol. 34, pp. 777-782 (Dec. 1977).
Mandels et al., Applied Microbiology, vol. 21, pp. 152-154 (Jan. 1971).
Ladisch et al., Science, vol. 201, pp. 743-745 (Aug. 1978).

Primary Examiner—Lionel M. Shapiro
Attorney, Agent, or Firm—Nathan Edelberg; Robert P. Gibson; Lawrence E. Labadini

[57] ABSTRACT

A process and a microorganism for synthesizing cellulase enzymes are described. The microorganism is a mutant strain of an Ascomycete fungus capable of synthesizing cellulases. The synthesis of cellulases by the mutant is nonrepressed by glycerol, repressed by glucose but not subject to postrepression lag, and inducible to high levels by lactose. Furthermore, the combination of lactose with xylose elicits maximum cellulase synthesis by the mutant.

7 Claims, 6 Drawing Figures

United States Patent [19]
Tosaka et al.
[11] 4,275,157
[45] Jun. 23, 1981

[54] METHOD FOR THE PRODUCTION OF L-LYSINE

[75] Inventors: Osamu Tosaka, Tokyo; Eiji Ono, Kawasaki; Masaru Ishihara, Yokohama; Hajimu Morioka, Kawasaki; Koichi Takinami, Yokohama, all of Japan

[73] Assignee: Ajinomoto Company, Incorporated, Tokyo, Japan

[21] Appl. No.: 56,414

[22] Filed: Jul. 10, 1979

[30] Foreign Application Priority Data

Jul. 10, 1978 [JP] Japan 53-83807

[51] Int. Cl.[3] C12P 13/08
[52] U.S. Cl. 435/115; 435/172; 435/840; 435/843
[58] Field of Search 435/115

[56] References Cited

U.S. PATENT DOCUMENTS

3,756,916 9/1973 Leavitt 435/115
3,871,960 3/1975 Kubota et al. 435/115

Primary Examiner—Alvin E. Tanenholtz
Attorney, Agent, or Firm—Oblon, Fisher, Spivak, McClelland & Maier

[57] ABSTRACT

L-lysine is produced by culturing mutants of Corynebacterium or Brevibacterium which are sensitive to fluoropyruvic acid.

4 Claims, No Drawings

United States Patent [19]

Manis

[11] **4,273,875**

[45] **Jun. 16, 1981**

[54] **PLASMID AND PROCESS OF ISOLATING SAME**

[75] Inventor: **Jack J. Manis**, Portage, Mich.

[73] Assignee: **The Upjohn Company**, Kalamazoo, Mich.

[21] Appl. No.: **17,812**

[22] Filed: **Mar. 5, 1979**

[51] **Int. Cl.**[3] **C12N 1/20**

[52] **U.S. Cl.** **435/253**; 435/91; 435/317; 435/820; 435/886

[58] **Field of Search** 435/91, 317, 820, 253

[56] **References Cited**

PUBLICATIONS

J. Gen. Microbiol 106, 377-381, 201-206 (1978).
J. Gen. Microbiol 79, 331-342 (1973).
J. Antibiotics 30, 1146-1149, 897-899 (1977).
Nature 254, 265-267 (1975).
J. Gen. Microbiol 98, 239-252 (1977).
J. Antibiotics 33, 45-47 (1969).
Broda, Plasmids, Freeman and Company Ltd., p. 5-11 (1979).
Science, vol. 196, Editorial page, Apr. 1977.
Nature 274, 398-400 (1978).
Huber et al., Can. J. Microbiol 24, 631-632 (1978).
J. Bacteriol 121, 416-421 (1975).
Biomedicine 26, 236-249 (1977).
J. Gen. Microbiol 90, 336-346 (1975).

Primary Examiner—Alvin E. Tanenholtz
Attorney, Agent, or Firm—Roman Saliwanchik

[57] **ABSTRACT**

A novel chemical compound, essentially pure plasmid pUC6, which is obtainable from a biologically pure culture of the microorganism *Streptomyces espinosus* biotype 23724a, NRRL 11439. The pUC6 plasmid is useful as a cloning vehicle in recombinant DNA work. For example, using DNA methodology, a desired gene, for example, the insulin gene, can be inserted into pUC6 and the resulting plasmid can then be transformed into a suitable host microbe which, upon culturing, produces the desired insulin.

5 Claims, 1 Drawing Figure

United States Patent [19]

Wands et al.

[11] **4,271,145**

[45] **Jun. 2, 1981**

[54] **PROCESS FOR PRODUCING ANTIBODIES TO HEPATITIS VIRUS AND CELL LINES THEREFOR**

[75] Inventors: **Jack R. Wands**, Waban, Mass.; **Vincent R. Zurawski, Jr.**, West Chester, Pa.

[73] Assignee: **The Massachusetts General Hospital**, Boston, Mass.

[21] Appl. No.: **86,947**

[22] Filed: **Oct. 22, 1979**

[51] **Int. Cl.**[3] **A61K 39/00**; A61K 39/42; C12N 1/26

[52] **U.S. Cl.** **424/85**; 424/86; 424/88; 424/89; 435/240; 435/948

[58] **Field of Search** 424/85, 86; 435/2, 68, 435/240, 948

[56] **References Cited**

U.S. PATENT DOCUMENTS

4,196,265 4/1980 Koprowski et al. 424/86

OTHER PUBLICATIONS

The Lancet, editorial, pp. 1242-1243, Jun. 11, 1977.
Koprowski et al., Proc. Natl. Acad. Sci., USA, vol. 74, pp. 2985-2988, 1977.
Kohler and Milstein, Eur. J. Immunol., vol. 6, pp. 511-519, 1976.
Milstein & Kohler, "Antibodies In Human Diagnosis and Therapy", edited by Haber & Krause, (Raven), pp. 271-278, 1977.

Primary Examiner—Delbert R. Phillips
Assistant Examiner—Blondel Hazel
Attorney, Agent, or Firm—Paul J. Cook; Marvin C. Guthrie

[57] **ABSTRACT**

Cell lines for producing monoclonal antibodies to hepatitis virus are established by immunizing animal lymphocytes with hepatitis antigen to form antibody producing cells which then are fused with myeloma cells. The resultant somatic cell hybrids can be cloned. These clones produce monoclonal antibodies to individual antigenic determinates unique to hepatitis virus.

13 Claims, 5 Drawing Figures

United States Patent [19]

Ando et al.

[11] **4,259,446**

[45] **Mar. 31, 1981**

[54] **PROCESS FOR PREPARATION OF DEOXYRIBONUCLEASES**

[75] Inventors: **Tadahiko Ando**; **Takehiko Shibata**, both of Tokyo; **Eiji Hayase**, Niiza; **Shukuko Ikawa**, Wako, all of Japan

[73] Assignee: **Rikagaku Kenkyusho**, Wako, Japan

[21] Appl. No.: **58,802**

[22] Filed: **Jul. 19, 1979**

[30] **Foreign Application Priority Data**

Jul. 28, 1978 [JP] Japan 53/92094

[51] **Int. Cl.**[3] **C12N 9/22**; C12N 15/00

[52] **U.S. Cl.** **435/199**; 435/172

[58] **Field of Search** 435/199, 172

[56] **References Cited**

U.S. PATENT DOCUMENTS

3,930,956 1/1976 Juni ..... 435/172 X
4,080,261 3/1978 Shibata et al. ..... 435/172 X
4,161,424 7/1979 Ando et al. 435/199

Primary Examiner—Lionel M. Shapiro
Attorney, Agent, or Firm—Bucknam and Archer

[57] **ABSTRACT**

Disclosed is a process for the preparation of deoxyribonucleases (DNases) which comprise culturing a novel transformant belonging to the genus Bacillus, collecting a cell-free extract from cells obtained during a period ranging from the late logarithmic growth phase to the initial stage of the stationary growth phase, and subjecting said cell-free extract to fractionation or separation to obtain two or more DNases each of which possessing different substrate specificity.

5 Claims, No Drawings

United States Patent [19]

Shine

[11] **4,264,731**

[45] **Apr. 28, 1981**

[54] **DNA JOINING METHOD**

[75] Inventor: **John Shine**, San Francisco, Calif.

[73] Assignee: **The Regents of the University of California**, Berkeley, Calif.

[21] Appl. No.: **898,887**

[22] Filed: **Apr. 21, 1978**

Related U.S. Application Data

[63] Continuation-in-part of Ser. No. 805,023, Jun. 9, 1977, which is a continuation of Ser. No. 801,343, May 27, 1977.

[51] **Int. Cl.**[2] **C12P 19/34**; C12N 15/00; C12R 1/19

[52] **U.S. Cl.** **435/91**; 435/172; 435/317; 435/849

[58] **Field of Search** ..... 195/1, 28 N; 435/91, 435/172, 317

[56] **References Cited**

PUBLICATIONS

Molecular Cloning of Recombinant DNA, Miami Winter Symposium, vol. 13, pp. 35-56 (1977).

Primary Examiner—Alvin E. Tanenholtz
Attorney, Agent, or Firm—Keil & Witherspoon

[57] **ABSTRACT**

A selected portion of DNA molecules having reactant ends which are capable of being joined in a ligase catalyzed reaction are pretreated so as to remove the 5'-terminal phosphate groups. Such a treatment reduces the frequency of joining an undersired combination and enhances the frequency of joining the desired combination.

10 Claims, 1 Drawing Figure

United States Patent [19]
Chakrabarty
[11] **4,259,444**
[45] **Mar. 31, 1981**

[54] **MICROORGANISMS HAVING MULTIPLE COMPATIBLE DEGRADATIVE ENERGY-GENERATING PLASMIDS AND PREPARATION THEREOF**

[75] Inventor: **Ananda M. Chakrabarty**, Latham, N.Y.

[73] Assignee: **General Electric Company**, Schenectady, N.Y.

[21] Appl. No.: **260,563**

[22] Filed: **Jun. 7, 1972**

[51] **Int. Cl.**[3] **C12N 15/00**
[52] **U.S. Cl.** **435/172**; 435/253; 435/264; 435/281; 435/820; 435/875; 435/877
[58] **Field of Search** ..... 195/28 R, 1, 3 H, 3 R, 195/96, 78, 79, 112; 435/172, 253, 264, 820, 281, 875, 877

[56] **References Cited**

PUBLICATIONS

Annual Review of Microbiology vol. 26 Annual Review Inc. 1972 pp. 362-368.
Journal of Bacteriology vol. 106 pp. 468-478 (1971).
Bacteriological Reviews vol. 33 pp. 210-263 (1969).

Primary Examiner—R. B. Penland
Attorney, Agent, or Firm—Leo I. MaLossi; James C. Davis, Jr.

[57] **ABSTRACT**

Unique microorganisms have been developed by the application of genetic engineering techniques. These microorganisms contain at least two stable (compatible) energy-generating plasmids, these plasmids specifying separate degradative pathways. The techniques for preparing such multi-plasmid strains from bacteria of the genus Pseudomonas are described. Living cultures of two strains of Pseudomonas (*P. aeruginosa* [NRRL B-5472] and *P. putida* [NRRL B-5473]) have been deposited with the United States Department of Agriculture, Agricultural Research Service, Northern Marketing and Nutrient Research Division, Peoria, Ill. The *P. aeruginosa* NRRL B-5472 was derived from *Pseudomonas aeruginosa* strain 1c by the genetic transfer thereto, and containment therein, of camphor, octane, salicylate and naphthalene degradative pathways in the form of plasmids. The *P. putida* NRRL B-5473 was derived from *Pseudomonas putida* strain PpG1 by genetic transfer thereto, and containment therein, of camphor, salicylate and naphthalene degradative pathways and drug resistance factor RP-1, all in the form of plasmids.

18 Claims, 2 Drawing Figures

United States Patent [19]
Colby, Jr. et al.
[11] **4,262,090**
[45] **Apr. 14, 1981**

[54] **INTERFERON PRODUCTION**

[75] Inventors: **Clarence Colby, Jr.**, Carmel Valley, Calif.; **Dan W. Denney, Jr.**, Lebanon, Tenn.

[73] Assignee: **Cetus Corporation**, Berkeley, Calif.

[21] Appl. No.: **45,031**

[22] Filed: **Jun. 4, 1979**

[51] **Int. Cl.**[3] **C12P 19/34**
[52] **U.S. Cl.** **435/91**; 435/68; 435/172; 435/5; 435/240; 435/811; 424/85
[58] **Field of Search** 435/92, 91, 811

[56] **References Cited**

U.S. PATENT DOCUMENTS

3,773,924 11/1973 Ho et al. 435/811

OTHER PUBLICATIONS

Jarvis et al., Somatic Cell Genetics, vol. 4, No. 6, pp. 677-697 (1978).
King, Handbook of Genetics, vol. 5, pp. 267-289 (1976).

Primary Examiner—Alvin E. Tanenholtz
Attorney, Agent, or Firm—Bertram I. Rowland

[57] **ABSTRACT**

Method for preparing interferon, mRNA for interferon, and competent recombinant DNA containing dsDNA and cDNA from mRNA coding for mammalian interferon. The method employs crossing a mutant mammalian cell which is semiconstitutive for interferon with a cell derived from the same or different mammal having wild type gene(s) for interferon and for the regulation of interferon synthesis and desirably having phenotypic properties allowing for selection of the hybrid cells. The desired hybrid clones are then induced to produce IF mRNA, wherein the amounts of mRNA for interferon are greatly enhanced over the amounts normally obtained from wild type cell strains. The mRNA is employed to produce cDNA which codes for the mammalian interferon. The single stranded cDNA is employed as a template to prepare dsDNA which is then combined with a replicon recognized by a microorganism host to provide a recombinant DNA. The microorganism host is transformed with the recombinant DNA, so as to provide a source for the interferon gene, as well as interferon.

5 Claims, No Drawings

United States Patent [19]
Paschke et al.
[11] **4,263,403**
[45] **Apr. 21, 1981**

[54] **METHOD OF EXTRACTING URANIUM FROM SEA WATER**

[75] Inventors: **Manfred Paschke; Klaus Wagener; Maximilian Wald**, all of Jülich, Fed. Rep. of Germany

[73] Assignee: **Kernforschungsanlage Jülich Gesellschaft mit beschränkter Haftung**, Jülich, Fed. Rep. of Germany

[21] Appl. No.: **24,957**

[22] Filed: **Mar. 29, 1979**

Related U.S. Application Data

[63] Continuation-in-part of Ser. No. 818,580, Jul. 25, 1977, abandoned, which is a continuation-in-part of Ser. No. 664,371, Mar. 5, 1976, abandoned.

[30] **Foreign Application Priority Data**

Mar. 7, 1975 [DE] Fed. Rep. of Germany 2509943

[51] **Int. Cl.**[3] **C12N 15/00**
[52] **U.S. Cl.** **435/172**; 423/3; 210/601; 210/611; 210/912; 47/1.4
[58] **Field of Search** 435/172, 243, 245, 262; 47/1.4, 58; 210/1, 2, 11, 150; 423/3

[56] **References Cited**

U.S. PATENT DOCUMENTS

3,540,589 11/1970 Boris 210/150
3,880,716 4/1975 Engelbart 435/106
4,039,445 8/1977 Heide ..... 210/38 C

OTHER PUBLICATIONS

Zajic et al., "Recovery of Heavy Metals by Microbes", Dev. in Ind. Micro., vol. 13, Garmond/Pridemark Pees, Baltimore, (1972), pp.91-100.
Heide et al., "Extraction of Uranium from Sea Water by Cultured Algae", Natur Wissenschaften, vol. 60, (1973), p. 431.
Jilek et al., "Removing Uranium From Mine Waters and Wastes From Hydrometalurgical Process", Chemical Abstracts, vol. 82, (1975), p. 266, Abs. No. 174984g.
Jilek et al., "Removing Uranium Compounds From Waste Mine Waters", *Chemical Abstracts*, vol. 82, (1975), p. 266, Abs. No. 174985h.

Primary Examiner—Ernest G. Therkorn
Attorney, Agent, or Firm—Becker & Becker, Inc.

[57] **ABSTRACT**

A method of producing a matrix of micro-organisms for extracting and gaining uranium from sea water, according to which the matrix is made of micro-organisms occurring in nature that are exposed to x-ray irradiations. These predetermined micro-organisms accordingly form colonies or threads and are filtered easily and cultivated. These micro-organisms accordingly form colonies or threads and are filtered easily and cultivated. These micro-organisms have a ratio of surface to volume that is relatively high. Subsequently, the thus irradiated micro-organisms are placed on a nutrient medium rich in uranium and are left there until colonies are formed. Thereupon, the surviving colonies of mutants are inoculated in a nutrient solution, and are then cultivated to produce the matrix.

9 Claims, No Drawings

United States Patent [19]
Murphy
[11] **4,264,737**
[45] **Apr. 28, 1981**

[54] **METHOD OF MAKING GENETICALLY STABLE MUTANTS OF *VIBRIO CHOLERAE***

[75] Inventor: **John R. Murphy**, Cambridge, Mass.

[73] Assignee: **President and Fellows of Harvard College**, Cambridge, Mass.

[21] Appl. No.: **59,293**

[22] Filed: **Jul. 20, 1979**

Related U.S. Application Data

[63] Continuation-in-part of Ser. No. 944,344, Sep. 21, 1978, abandoned.

[51] **Int. Cl.**[3] **C12N 15/00**; C12N 1/36; C12R 1/63
[52] **U.S. Cl.** **435/172**; 435/245; 435/909; 424/92
[58] **Field of Search** 435/172, 245, 253, 909; 424/92, 93

[56] **References Cited**

U.S. PATENT DOCUMENTS

3,105,014 9/1963 Harrison 435/172
3,328,253 6/1967 Watanabe 424/92
3,984,285 10/1976 Leuner 435/172

OTHER PUBLICATIONS

Fetsailova et al., "N-Nitrosomethylurea Induced Streptomycin Dependent, and Strepto-, Mono-, and Neomycin resistant, *Vibrio cholerae* mutants and their properties", *Chem. Absts.*, vol. 87, No. 9, p. 130 (1977), Abs. No. 63410a.
Mikhailova et al., "Studies on Vibrio Changes in the Presence of Antibiotics," *Chem. Absts.*, vol. 88, No. 19 (1978), Abs. No. 131408d.
Mukerjee, "Preliminary Studies on the Development of a Live Oral Vaccine for Anti-Cholera Immunization", *Bull. Org. mond. Sante*, vol. 29, (1963), pp. 753-766.
Sanyal et al., "Live Oral Cholera Vaccine: Report of a Trial on Human Volunteer Subjects," *Bull. Org. mond. Sante*, vol. 40, (1969), pp. 503-511.
Finkelstein et al., "Studies on Toxinogensis in *Vibrio cholerae*, I. Isolation of Mutants with Altered Toxinogenicity", *J. Infect. Dis.*, vol. 129, No. 2 (1974), pp. 117-123.
Vasil et al., "Conjugal Transfer of a Chromosomal Gene Determining Production of Enterotoxin in *Vibrio cholerae*," *Science*, vol. 187, (1975), pp. 849-850.
Mekalanos et al., "Affinity Filters, a New Approach to the Isolation of Tox Mutants of *Vibrio cholerae*," *Proc. Nat'l. Acad. Sci.*, vol. 75, No. 2 (1978), pp. 941-945.
Holmes et al., "Quantitative Measurements of Cholera Enterotoxin in Cultures of Toxogenic Wild-Type and Nontoxinogenic Mutant Strains of *Vibrio cholerae* by Using a Sensitive and Specific Reversed Passive Hemagglutination Assay for Cholera Enterotoxin," *Infection and Immunity*, vol. 19, No. 1, (1978), pp. 101-106.
Ruch et al., "Isolation of Nontoxinogenic Mutants of *Vibrio cholerae* in a Colorometric Assay for Cholera Toxin using the S49, Mouse Lymphosarcoma Cell Line," *J. Infect. Dis.*, vol. 137, No. 6 (1978) pp. 747-755.

Primary Examiner—Thomas G. Wiseman

[57] **ABSTRACT**

Incubation of a parent strain of *Vibrio cholerae* at elevated temperature to produce a hypotoxinogenic variant strain and mutation of the variant strain results in mutant strains which retain the biotype and antigens of the parent strain, and which are genetically stable and useful as live oral vaccines for immunization against cholera. Preferably, a hypotoxinogenic mutant which is also non-pathogenic in animal model systems is isolated by the method disclosed in this application.

6 Claims, No Drawings

United States Patent [19]
Koprowski et al.
[11] **4,172,124**
[45] **Oct. 23, 1979**

[54] **METHOD OF PRODUCING TUMOR ANTIBODIES**

[75] Inventors: **Hilary Koprowski**, Wynnewood; **Carlo M. Croce**, Philadelphia, both of Pa.

[73] Assignee: **The Wistar Institute**, Philadelphia, Pa.

[21] Appl. No.: **901,102**

[22] Filed: **Apr. 28, 1978**

[51] **Int. Cl.**[2] **A61K 39/00**; A61K 39/42; C12K 9/00

[52] **U.S. Cl.** **424/85**; 424/86; 435/240; 435/172

[58] **Field of Search** 424/85, 86; 195/1.8

[56] **References Cited**

PUBLICATIONS

Welsh-Nature, vol. 266, Apr. 1977, p. 495.
Galfre et al.-Nature, vol. 266, Apr. 1977, pp. 550-552.
Kohler et al.-Nature, vol. 256, Aug. 7, 1975, pp. 495-497.

Primary Examiner—Sam Rosen

[57] **ABSTRACT**

Antibodies demonstrating a specificity for malignant tumors are produced by somatic cell hybrids between hypoxanthine phosphoribosyltransferase deficient myeloma cells and spleen or lymph cells derived from an animal previously primed with tumor cells.

16 Claims, No Drawings

United States Patent [19]
Hung et al.
[11] **4,224,408**
[45] **Sep. 23, 1980**

[54] **DEOXYRIBONUCLEIC ACID SYNTHESIS USING BINDING PROTEIN**

[75] Inventors: **Paul P. Hung**, Waukegan; **Shaw-guang Lee**, Libertyville, both of Ill.

[73] Assignee: **Abbott Laboratories**, Chicago, Ill.

[21] Appl. No.: **963,245**

[22] Filed: **Nov. 22, 1978**

[51] **Int. Cl.**[2] **C12P 19/34**

[52] **U.S. Cl.** **435/91**; 435/172; 435/194

[58] **Field of Search** ..... 195/1, 28 N; 435/91

[56] **References Cited**

PUBLICATIONS

Hung et al., Nature, vol. 259, No. 5543, pp. 449-502, Feb. 12, 1976.
Lee et al., Nature, vol. 270, No. 5635, pp. 366-369, Nov. 24, 1977.

Primary Examiner—Alvin E. Tanenholtz
Attorney, Agent, or Firm—Robert L. Niblack; Gildo E. Fato

[57] **ABSTRACT**

Described is a method of obtaining complete copying of the entire length of single stranded ribonucleic acid (RNA) into its complementary deoxyribonucleic acid (cDNA) by reverse transcription using binding protein. The method can be used in recombinant DNA research to copy total messenger RNA into DNA.

2 Claims, 1 Drawing Figure

United States Patent [19]
Findl et al.
[11] **4,256,832**
[45] **Mar. 17, 1981**

[54] **CARCINOGEN AND MUTAGEN SCREENING METHOD AND APPARATUS**

[75] Inventors: **Eugene Findl**, Amityville; **Anthony M. Cundell**, Huntington, both of N.Y.

[73] Assignee: **BioResearch Inc.**, Farmingdale, N.Y.

[21] Appl. No.: **968,695**

[22] Filed: **Dec. 12, 1978**

[51] **Int. Cl.**[3] **C12Q 1/68**; C12Q 1/29

[52] **U.S. Cl.** ..... **435/6**; 435/29; 435/34; 435/39; 435/291; 435/807; 23/230 B; 204/195 B; 204/195 P

[58] **Field of Search** ..... 435/6, 29, 32, 39, 34, 435/172, 287, 291, 299, 315, 356; 204/195 B, 195 P; 23/230 B; 429/2

[56] **References Cited**

U.S. PATENT DOCUMENTS

3,765,841	10/1973	Paulson et al.	435/291
4,038,143	7/1977	Juni	435/6
4,066,510	1/1978	Thilly	435/6
4,072,574	2/1978	Loeb et al.	435/6

FOREIGN PATENT DOCUMENTS

2747567 4/1978 Fed. Rep. of Germany

OTHER PUBLICATIONS

Ames et al., "Methods for Detecting Carcinogens and Mutagens with the Salmonella/Mammalian-Microsome Mutagenicity Test", *Mutation Research*, vol. 31 (1975), pp. 347-364.
Devoret, "Bacterial Tests for Potential Carcinogens", *Scientific American*, vol. 241, No. 2, (1979) pp. 40-49.
Ames et al., "An Improved Bacterial Test System for the Detection and Classification of Mutagens and Carcinogens", *Proc. Nat. Acad. Sci.*, vol. 70, No. 3, (1973), pp. 782-786.
McCann et al., "Detection of Carcinogens as Mutagens in the Salmonella/Microsome Test: Assay of 300 Chemicals", *Proc. Nat. Acad. Sci.*, vol. 72, No. 12 (1975), pp. 5135-5139.
McCann et al., "Detection of Carcinogens as Mutagens in the Microsome Test : Assay of 300 Chemicals Discussion", *Proc. Nat. Acad. Sci.*, vol. 73, No. 3 (1976), pp. 950-954.
McCann et al., "A Simple Method for Detecting Environmental Carginogens as Mutagens", *Annals N.Y. Acad. Sci.*, vol. 271, pp. 5-13.

Primary Examiner—Thomas G. Wiseman
Attorney, Agent, or Firm—Larson, Taylor and Hinds

[57] **ABSTRACT**

A method of screening a material for potential carcinogenic or mutagenic activity. A mutant stain of eucaryotic or prokaryotic test organism is provided which is capable of reverting to a normal form in the presence of a carcinogen or mutagen. A growth media is provided in which the test organism is capable of growth in one only of its mutant forms. For example, the test organism may be a bacteria which in its mutant form is incapable of substantial growth in the absence of an essential nutrient and, in its natural form, is capable of rapid growth in the absence of that nutrient. The test organism and growth media are combined with oxygen and a material to be screened. Oxygen consumption is then detected to determine if the mutant strain has reverted to its normal form. Reversion is indicated if a change in oxygen consumption occurs when the material being screened is present.

15 Claims, 4 Drawing Figures

United States Patent [19]
Cohen et al.
[11] **4,237,224**
[45] **Dec. 2, 1980**

[54] **PROCESS FOR PRODUCING BIOLOGICALLY FUNCTIONAL MOLECULAR CHIMERAS**

[75] Inventors: **Stanley N. Cohen**, Portola Valley; **Herbert W. Boyer**, Mill Valley, both of Calif.

[73] Assignee: **Board of Trustees of the Leland Stanford Jr. University**, Stanford, Calif.

[21] Appl. No.: **1,021**

[22] Filed: **Jan. 4, 1979**

Related U.S. Application Data

[63] Continuation-in-part of Ser. No. 959,288, Nov. 9, 1978, which is a continuation-in-part of Ser. No. 687,430, May 17, 1976, abandoned, which is a continuation-in-part of Ser. No. 520,691, Nov. 4, 1974.

[51] **Int. Cl.**[3] **C12P 21/00**

[52] **U.S. Cl.** ..... **435/68**; 435/172; 435/231; 435/183; 435/317; 435/849; 435/820; 435/91; 435/207; 260/112.5 S; 260/27R; 435/212

[58] **Field of Search** ..... 195/1, 28 N, 28 R, 112, 195/78, 79; 435/68, 172, 231, 183

[56] **References Cited**

U.S. PATENT DOCUMENTS

3,813,316	5/1974	Chakrabarty	195/28 R

OTHER PUBLICATIONS

Morrow et al., Proc. Nat. Acad. Sci. USA, vol. 69, pp. 3365-3369, Nov. 1972.
Morrow et al., Proc. Nat. Acad. Sci. USA, vol. 71, pp. 1743-1747, May 1974.
Hershfield et al., Proc. Nat. Acad. Sci. USA, vol. 71, pp. 3455 et seq. (1974).
Jackson et al., Proc. Nat. Acad. Sci. USA, vol. 69, pp. 2904-2909, Oct. 1972.
Mertz et al., Proc. Nat. Acad. Sci. USA, vol. 69, pp. 3370-3374, Nov. 1972.
Cohen, et al., Proc. Nat. Acad. Sci. USA, vol. 70, pp. 1293-1297, May 1973.
Cohen et al., Proc. Nat. Acad. Sci. USA, vol. 70, pp. 3240-3244, Nov. 1973.
Chang et al., Proc. Nat. Acad. Sci, USA, vol. 71, pp. 1030-1034, Apr. 1974.
Ullrich et al., Science vol. 196, pp. 1313-1319, Jun. 1977.
Singer et al., Science vol. 181, p. 1114 (1973).
Itakura et al., Science vol. 198, pp. 1056-1063 Dec. 1977.
Komaroff et al., Proc. Nat. Acad. Sci. USA, vol. 75, pp. 3727-3731, Aug. 1978.
Chemical and Engineering News, p. 4, May 30, 1977.
Chemical and Engineering News, p. 6, Sep. 11, 1978.

Primary Examiner—Alvin E. Tanenholtz
Attorney, Agent, or Firm—Bertram I. Rowland

[57] **ABSTRACT**

Method and compositions are provided for replication and expression of exogenous genes in microorganisms. Plasmids or virus DNA are cleaved to provide linear DNA having ligatable termini to which is inserted a gene having complementary termini, to provide a biologically functional replicon with a desired phenotypical property. The replicon is inserted into a microorganism cell by transformation. Isolation of the transformants provides cells for replication and expression of the DNA molecules present in the modified plasmid. The method provides a convenient and efficient way to introduce genetic capability into microorganisms for the production of nucleic acids and proteins, such as medically or commercially useful enzymes, which may have direct usefulness, or may find expression in the production of drugs, such as hormones, antibiotics, or the like, fixation of nitrogen, fermentation, utilization of specific feedstocks, or the like.

14 Claims, No Drawings

United States Patent [19]
Koprowski et al.
[11] 4,196,265
[45] Apr. 1, 1980

[54] METHOD OF PRODUCING ANTIBODIES

[75] Inventors: Hilary Koprowski, Wynnewood; Walter U. Gerhard; Carlo M. Croce, both of Philadelphia, all of Pa.

[73] Assignee: The Wistar Institute, Philadelphia, Pa.

[21] Appl. No.: 933,092

[22] Filed: Aug. 11, 1978

Related U.S. Application Data

[63] Continuation-in-part of Ser. No. 806,857, Jun. 15, 1977.

[51] Int. Cl.[2] A01N 1/02; A61K 39/42
[52] U.S. Cl. 435/2; 424/85; 424/86
[58] Field of Search 424/85, 86; 195/1.8

[56] References Cited

U.S. PATENT DOCUMENTS

2,768,114 10/1956 Koprowski et al. 424/89

FOREIGN PATENT DOCUMENTS

1300391 12/1971 United Kingdom .

OTHER PUBLICATIONS

Gerhard & Koprowski, Nature, vol. 266, Mar. 4, 1977, pp. 360–361.
Milstein & Herzenberg, Immune System, "Genetics & Regulation," edited by Sercarz et al., (Academic Press), Dec. 1977, pp. 273–275.
Koprowski, Gerhard & Croce, Proc. Nat. Acad. of Sci. (USA), vol. 74, Jul. 1977, pp. 2985–2988.
Milstein & Kohler, "Antibodies in Human Diagnosis & Therapy", edited by Haber & Krause (Raven), Feb. 17, 1977, pp. 271–284.
The Lancet, editorial, Jun. 11, 1977, pp. 1242–1243.
Kohler, Pearson & Milstein, Somatic Cell Genetics, vol. 3, Feb. 7, 1977, pp. 303–312.
Kohler et al., Nature, vol. 256, (Aug. 7, 1975), pp. 495 to 497.
Kohler et al., Eur. J. Immunol., vol. 16, (1976), pp. 511–519.
Galfre et al., Nature, vol. 266, (Apr. 1977), pp. 550–552.
Welsh, Nature, vol. 266, (Apr. 1977), p. 495.

Primary Examiner—Sam Rosen

[57] ABSTRACT

Continuous cell lines of genetically stable fused cell hybrids capable of producing large amounts of monoclonal antibodies against specific viruses and their antigenic determinants have been developed. The cell lines are fused cell hybrids between viral antibody producing cells and myeloma cells. Fused cell hybrids between influenza virus-primed mouse spleen cells and mouse myeloma cells can be maintained indefinitely in culture and continue to produce large amounts of anti-influenza antibody.

18 Claims, No Drawings

United States Patent [19]
Zhdanova et al.
[11] 4,237,228
[45] Dec. 2, 1980

[54] METHOD OF PRODUCING L-ISOLEUCINE USING *BREVIBACTERIUM FLAVUM*

[76] Inventors: Nelli I. Zhdanova, Leningradskoe shosse, 112, korpus 3, kv. 748; Tatyana V. Leonova, ulitsa Svobody, 81, korpus 5, kv. 852; Ljudmila F. Kozyreva, 4 Novopodmoskovny pereulok, 4, kv. 80, all of Moscow, U.S.S.R.

[21] Appl. No.: 917,989

[22] Filed: Jun. 22, 1978

[30] Foreign Application Priority Data

Jun. 29, 1977 [SU] U.S.S.R. 2501219

[51] Int. Cl.[3] C12P 13/06; C12N 15/00; C12R 1/13
[52] U.S. Cl. 435/116; 435/172; 435/840
[58] Field of Search 195/47, 96, 79, 112, 195/29; 435/106, 116, 172, 840

[56] References Cited

U.S. PATENT DOCUMENTS

3,058,888 10/1962 Chibata et al. 195/29
3,231,478 1/1966 Uemura et al. 195/29
3,262,861 7/1966 Kinoshita et al. 195/29
3,502,544 3/1970 Sugiskai et al. 195/29
3,767,529 10/1973 Yoshinaga et al. 195/30

FOREIGN PATENT DOCUMENTS

51-6237 2/1976 Japan 195/47
51-21077 6/1976 Japan 195/47
889187 2/1962 United Kingdom 195/30

OTHER PUBLICATIONS

Ikeda, et al., "Screening of L-Isoleucine Producers among Ethiomine Resistant Mutants of L-Threonine Producing Bacteria", *Agr. Biol. Chem.*, vol. 40, No. 3, (1976), pp. 511–516.
Kisumi, et al., "Isoleucine Accumulation by Regulatory Mutants of *Serratia Marcescens:* Lack of both Feeback Inhibition and Repression" J. Bact., vol. 110, No. 2, (1972), pp. 761–763.
Shilo, et al., "Production of L-Isoleucine by AHV Resistant Mutants of *Brevibacterium flavum*", *Agr. Biol. Chem.*, vol. 37, No. 9, (1973), pp. 2053–2061.
Kase, et al., "L-Isoleucine Production by Analog-resistant Mutants Derived from Threonine-Producing Strain of *Corgnebacterium glutamicam*", *Agr. Biol. chem.*, vol. 41, No. 1, (1977), pp. 109–116.

Primary Examiner—Thomas G. Wiseman
Attorney, Agent, or Firm—Fleit & Jacobson

[57] ABSTRACT

A method of producing L-isoleucine which comprises culturing the strain of *Brevibacterium flavum* VNII Genetika 10-89 deposited under the number CMIM B-1507 in a nutrient medium containing sources of nitrogen, carbon, mineral salts and vitamins and under aerobic conditions.

Said strain makes it possible to produce L-isoleucine with a yield of 17 g/l and more.

10 Claims, No Drawings

United States Patent [19]
Hillman
[11] 4,133,875
[45] Jan. 9, 1979

[54] METHOD OF CONTROLLING DENTAL CARIES WITH STREPTOCOCCUS MUTANS MUTANT STRAINS

[75] Inventor: Jeffrey D. Hillman, Jamaica Plain, Mass.

[73] Assignee: Forsyth Dental Infirmary for Children, Boston, Mass.

[21] Appl. No.: 880,499

[22] Filed: Feb. 23, 1978

[51] Int. Cl.[2] A61K 37/00; A61K 7/16
[52] U.S. Cl. 424/93; 424/50
[58] Field of Search 424/50, 93

[56] References Cited

PUBLICATIONS

Klein et al.-Chem. Abst., vol. 83 (1975), p. 41054c.
Freedman et al.-Chem. Abst., vol. 81, (1974), p. 118325k.

Primary Examiner—Sam Rosen
Attorney, Agent, or Firm—Richard P. Crowley

[57] ABSTRACT

Mutant strains have been isolated from *Streptococcus mutans* strain BHT-2(str) which are characterized by a single point mutation in the structural gene for the enzyme, L(+) lactate dehydrogenase, this enzyme being normally responsible for lactic acid production by this bacterium. *Streptococcus mutans* is believed to be a principal pathogen in dental caries, a disease characterized by the dissolution of the mineral portion of the tooth caused by acid resulting from the interaction of bacteria on the tooth surface with carbohydrates. The mutant strains of the invention will be found useful as prototype nonvirulent effector strains in controlling the incidence and severity of dental caries.

11 Claims, No Drawings

United States Patent [19]
Queener et al.
[11] 4,115,197
[45] Sep. 19, 1978

[54] PROCEDURE FOR OBTAINING PENICILLIUM SPECIES MUTANTS WITH IMPROVED ABILITY TO SYNTHESIZE MYCOPHENOLIC ACID

[75] Inventors: Stephen W. Queener, Indianapolis, Ind.; Claude H. Nash, III, Audubon, Pa.

[73] Assignee: Eli Lilly and Company, Indianapolis, Ind.

[21] Appl. No.: 828,392

[22] Filed: Aug. 29, 1977

Related U.S. Application Data

[63] Continuation of Ser. No. 779,670, Mar. 21, 1977, abandoned.

[51] Int. Cl.[2] C12D 9/06; C12D 9/10; C12K 1/02
[52] U.S. Cl. ..... 195/36 R; 195/30; 195/79; 195/81
[58] Field of Search ..... 195/36 R, 30, 81

[56] References Cited

PUBLICATIONS

Wilkerson et al., ASM News, vol. 42, No. 7, p. 423 (1976).
Wilkerson et al., "Polyene-Antibiotic Resistant Mutants of Penicillium Stoloniferum: Sterol Content and Mycophenolic Acid Synthesis" presented at Apr. 10, 1976 meeting of Indiana Branch of ASM.
Muth et al., Antimicrobial Agents and Chemotherapy, vol. 8, pp. 321–327 (1975).

Primary Examiner—Lionel M. Shapiro
Attorney, Agent, or Firm—Nancy J. Harrison; Arthur R. Whale

[57] ABSTRACT

A procedure for efficiently obtaining higher mycophenolic-acid-producing mutants from mycophenolic-acid-producing strains of the genus Penicillium by selecting mutants which are resistant to polyene antibiotics.

8 Claims, No Drawings

United States Patent [19]
Li
[11] **4,189,426**
[45] **Feb. 19, 1980**

[54] **RECOMBINANT HORMONAL COMPOSITIONS AND METHOD**

[75] Inventor: **Choh H. Li**, Berkeley, Calif.
[73] Assignee: **Hoffmann-La Roche, Inc.**, Nutley, N.J.

[21] Appl. No.: **938,278**
[22] Filed: **Aug. 31, 1978**

Related U.S. Application Data

[63] Continuation-in-part of Ser. No. 892,571, Apr. 3, 1978, abandoned, which is a continuation-in-part of Ser. No. 842,437, Oct. 14, 1977, abandoned, which is a continuation of Ser. No. 675,668, Apr. 12, 1976, abandoned.

[51] **Int. Cl.**[2] **C07C 103/52; A61K 37/00**
[52] **U.S. Cl.** ..... **260/112.5 R; 424/177**
[58] **Field of Search** ..... 260/112.5 R; 424/177

[56] **References Cited**

U.S. PATENT DOCUMENTS

3,475,534	10/1969	Fenichel et al.	260/112.5 R
3,853,832	12/1974	Li	260/112.5 R
3,907,765	9/1975	Wang	260/112.5 R
4,056,520	11/1977	Sonenberg et al.	260/112.5 R

OTHER PUBLICATIONS

Arch. Biochem. and Biophysic., 146, 233–236 (1971).
J. Org. Chem., 40, No. 9, 1227–1234 (1975).
J. Med. Chem. 18, No. 2 (1975), 124–126.
Endocrinol. 93, (1973), 848–857, 858–865, 866–873.
The Endocrine Society, 1970, 112.
Endocrinology 94, 1974, 883–891.
Endocrinology 96, 625–636.
Nature 237, 1972, 433–439.
Li, et al., Chem. Abst. 85, 1976, p. 186915K.

Primary Examiner—Delbert R. Phillips
Attorney, Agent, or Firm—Jon S. Saxe; George M. Gould

[57] **ABSTRACT**

Non-covalent complementation of peptide hormonal fragments produces a recombinant with the hormonal activity of the native hormone. The fragments employed can be natural, synthetic or mixed natural-synthetic origin and can contain less than the total amino acid sequence of the native hormone or fragments derived from related hormones. In a preferred embodiment the human growth hormone (HGH) fragments [Cys(Cam)^{53}-HGH-(1-134)] and [Cys(Cam)^{165,182,189}-HGH-(141-191)] undergo non-covalent complementation to yield a recombinant having full growth-promoting and prolactin potency of the native human growth hormone.

18 Claims, No Drawings

United States Patent [19]
Chain et al.
[11] **3,966,707**
[45] **June 29, 1976**

[54] **PROCESS FOR PREPARING DOUBLE STRANDED RNA**

[75] Inventors: **Ernst Boris Chain**, London; **Kenneth William Buck**, Crawley Down; **Joan Elizabeth Darbyshire**, London; **Geoffrey Talbot Banks**, Billingshurst; **Fred Himmelweit**; **Giulio Ratti**, both of London, all of England
[73] Assignee: **Beecham Group Limited**, United Kingdom

[22] Filed: **Aug. 2, 1974**
[21] Appl. No.: **494,334**

Related U.S. Application Data

[60] Continuation of Ser. No. 202,635, Nov. 26, 1971, abandoned, which is a division of Ser. No. 124,496, March 15, 1971, abandoned.

[52] **U.S. Cl.** ..... **260/211.5 R**; 195/15; 195/28 N; 424/85
[51] **Int. Cl.**[2] **C07C 21/02**
[58] **Field of Search** ..... 260/211.5 R

[56] **References Cited**

UNITED STATES PATENTS

3,597,318	8/1971	Sutherland et al.	260/211.5 R
3,629,235	12/1971	Lampson et al.	260/211.5 R

OTHER PUBLICATIONS

Moyer et al., "Chem. Abst.", vol. 60, p. 10968(b), 1964.

Primary Examiner—Johnnie R. Brown

[57] **ABSTRACT**

Virus particles capable of stimulating the production of interferon are isolated from fungal cells of the mould *Aspergillus foetidus* or *Aspergillus niger* or from the nutrient medium in which or on which *Aspergillus foetidus* or *Aspergillus niger* mould has been grown. Double-stranded RNA material can be isolated from the virus particles extracted from *Aspergillus foetidus* or *Aspergillus niger* and said RNA material is capable of stimulating production of interferon. Pharmaceutical compositions comprising said particles or said RNA material in combination with pharmaceutically acceptable carriers and excipients are also provided.

6 Claims, No Drawings

United States Patent [19]
Heslot et al.
[11] **4,172,764**
[45] **Oct. 30, 1979**

[54] **PROCESS FOR OBTAINING HYBRID STRAINS OF YEASTS**

[75] Inventors: **Henri Heslot**, Paris; **Anne Provost**, Massy; **Philippe Fournier**, Versailles, all of France
[73] Assignee: **Agence Nationale de Valorisation de la Recherche (ANVAR)**, Neuilly sur Seine, France

[21] Appl. No.: **834,937**
[22] Filed: **Sep. 20, 1977**

[30] **Foreign Application Priority Data**

Sep. 21, 1976 [FR] France 76 28360

[51] **Int. Cl.**[2] **C12K 1/02**
[52] **U.S. Cl.** **435/172**; 435/924; 435/248; 435/249; 435/259; 435/267
[58] **Field of Search** 195/82, 78, 79, 76, 195/1

[56] **References Cited**

U.S. PATENT DOCUMENTS

3,855,063 12/1974 Nagasawa et al. 195/79

OTHER PUBLICATIONS

Ferenczy et al., Nature, vol. 248, pp. 793 & 794 (1974).
Ferenczy et al., Experientia 31/1, pp. 50–52 (1975).
Ferenczy et al., Experientia 31/9, pp. 1028–1030.
Fodor et al., Proc. Natl. Acad. Sci. U.S.A., vol. 73, No. 6, pp. 2147–2150, Jun. 1976.

Primary Examiner—Alvin E. Tanenholtz
Attorney, Agent, or Firm—Cullen, Sloman, Cantor, Grauer, Scott & Rutherford

[57] **ABSTRACT**

The cell walls are removed from two distinct auxotropic mutant strains of yeast. The protoplasts thus obtained are fused and the cell walls regenerated. The strains obtained are cultured on a medium where the original auxotrophs cannot develop and the hybrid or recombinant strains are recovered. The strains obtained by the process are useful for preparing yeast proteins.

13 Claims, No Drawings

United States Patent [19]
Thirumalachar et al.
[11] **4,082,613**
[45] **Apr. 4, 1978**

[54] **PROCESS FOR THE PRODUCTION OF INSULIN BY GENETICALLY TRANSFORMED FUNGAL CELLS**

[75] Inventors: **Mandayam J. Thirumalachar**; **Mandayam J. Narasimhan**, both of Bangalore, India; **John A. Anderson**, St. Paul, Minn.
[73] Assignee: **The Regents of the University of Minnesota**, Minneapolis, Minn.

[21] Appl. No.: **679,565**
[22] Filed: **Apr. 23, 1976**

[51] **Int. Cl.**[2] **C12D 13/02**
[52] **U.S. Cl.** ..... **195/76**; 195/1; 195/80 R; 195/1.8; 195/81
[58] Field of Search ..... 195/28 N, 76, 81, 1

[56] **References Cited**

PUBLICATIONS

Vanek et al., Genetics of Industrial Microorganisms, vol. II, p. 38, Elsevier Pub. Co., 1973.
Willmer, Cells and Tissues in Culture, vol. 2, p. 674, Academic Press, 1965.

Primary Examiner—Alvin E. Tanenholtz
Attorney, Agent, or Firm—Burd, Braddock & Bartz

[57] **ABSTRACT**

A process for the production of insulin using fungal cells. Human insulin producing cells are extracted to obtain the functional genome (the genetic material which determines the capacity of the cells to produce insulin) which is used to transform fungal cells, making them capable of producing insulin. The insulin has been extracted and identified by radioimmune assay and by bioassay. The same process can also be applied to produce animal insulins using specific specie transforming functional insulinogenic genomes. A process for serial secondary culture of insulin producing cells is disclosed. The significance of the invention is related to the great need to produce human insulin in large amounts. Human insulin has distinct biological and clinical advantages when compared with commercially available animal insulins now used for the treatment of diabetes mellitus in man.

6 Claims, No Drawings

United States Patent [19]
Shibata et al.
[11] **4,080,261**
[45] **Mar. 21, 1978**

[54] **NOVEL ENDONUCLEASE AND PROCESS FOR PRODUCTION THEREOF**

[75] Inventors: **Takehiko Shibata**, Wako; **Tadahiko Ando**, Tokyo, both of Japan

[73] Assignee: **Rikagaku Kenkyusho**, Japan

[21] Appl. No.: **729,969**

[22] Filed: **Oct. 6, 1976**

[30] **Foreign Application Priority Data**

Oct. 8, 1975 Japan 50-121671

[51] **Int. Cl.**[2] **C12D 13/10; C12D 13/06**
[52] **U.S. Cl.** ..... **195/62;** 195/65; 195/66 R; 195/28 N
[58] **Field of Search** ..... 195/62, 65, 66 R, 28 N

[56] **References Cited**

U.S. PATENT DOCUMENTS

3,956,064 5/1976 Horikoshi et al. ..... 195/28 N

Primary Examiner—Lionel M. Shapiro
Attorney, Agent, or Firm—Bucknam and Archer

[57] **ABSTRACT**

The present invention relates to new enzymes which decompose nucleic acid and are endowed with a substrate specificity recognizing specific biological desoxyribonucleic acid and cleaving specific bonds thereof to produce fragments of desoxyribonucleic acid of specific sizes and which are obtained by culturing microorganisms belonging to genus Bucillus and purifying the cell free extract thereof by such treatment as streptomycin treatment, ammonium sulfate precipitation, ion exchange chromatography, gel filtration or combination of these processes.

6 Claims, 1 Drawing Figure

United States Patent [19]
Loeb et al.
[11] **4,072,574**
[45] **Feb. 7, 1978**

[54] **SYSTEM FOR IN VITRO ASSAY FOR MUTAGENICITY AND/OR CARCINOGENICITY OF CHEMICALS OR OTHER EXOGENOUS AGENTS**

[75] Inventors: **Lawrence A. Loeb**, Elkins Park; **Michael A. Sirover**, Philadelphia, both of Pa.

[73] Assignee: **The Institute for Cancer Research**, Fox Chase, Pa.

[21] Appl. No.: **710,314**

[22] Filed: **July 30, 1976**

[51] **Int. Cl.**[2] **C12K 1/00**
[52] **U.S. Cl.** ..... **195/103.5 R;** 195/28 N
[58] **Field of Search** ..... 195/103.5 R, 28 N

[56] **References Cited**

U.S. PATENT DOCUMENTS

3,816,263 6/1974 Rabin et al. ..... 195/103.5 R
3,850,749 11/1974 Kaufmann et al. ..... 195/28 N

Primary Examiner—Alvin E. Tanenholtz
Attorney, Agent, or Firm—Jackson, Jackson & Chovanes

[57] **ABSTRACT**

This involves an in vitro assay system to screen for mutagenic and/or carcinogenic agents based on alterations in the fidelity of DNA synthesis. In the system, chemicals will be tested for their mutagenicity or carcinogenicity by measuring increases in the number of mistakes incorporated by purified DNA polymerases using synthetic polynucleotide templates. This system offers the advantage of performing this analysis in the test tube so that all parameters in the reaction can be monitored. Agents that enhance misincorporation during DNA synthesis would be predicted to have a higher probability of being mutagens or carcinogens in the human population.

9 Claims, No Drawings

United States Patent [19]
Mayer et al.
[11] **4,064,011**
[45] **Dec. 20, 1977**

[54] **PROCESS FOR PRODUCING ECORI RESTRICTION ENDONUCLEASE WITH *E.COLI* MUTANTS**

[75] Inventors: **Hubert Mayer; Horst Schutte**, both of Wolfenbuttel, Germany

[73] Assignee: **Gesellschaft fur Biotechnologische Forschung mbH**, Braunschweig-Stockheim, Germany

[21] Appl. No.: **778,261**

[22] Filed: **Mar. 16, 1977**

[51] **Int. Cl.**[2] **C12D 13/10**
[52] **U.S. Cl.** ..... **195/65;** 195/66 R
[58] **Field of Search** ..... 195/62, 65, 66 R

[56] **References Cited**

PUBLICATIONS

Smith in Methods in Molecular Biology, vol. 7, 1974, pp. 71-85.

Primary Examiner—Lionel M. Shapiro
Attorney, Agent, or Firm—Scully, Scott, Murphy & Presser

[57] **ABSTRACT**

ECoRI restriction endonuclease is produced with certain mutant strains of *E.coli* which are not antibiotic resistant and do produce the said enzyme which is obtained from the *E.coli* mutant cells without destroying the cells by extraction procedures.

8 Claims, No Drawings

United States Patent [19]
Goust et al.
[11] **4,001,080**
[45] **Jan. 4, 1977**

[54] **PRODUCTION OF IMMUNOLOGICAL MATERIALS**

[75] Inventors: **Jean Michel Goust; Robert Louis Moulias**, both of Paris, France

[73] Assignee: **Piktor Limited**, Paris, France

[22] Filed: **May 5, 1975**

[21] Appl. No.: **574,256**

Related U.S. Application Data

[63] Continuation-in-part of Ser. No. 407,192, Oct. 17, 1973, abandoned.

[30] **Foreign Application Priority Data**

Oct. 20, 1972 United Kingdom 48486/72

[52] **U.S. Cl.** **195/1.8**
[51] **Int. Cl.**[2] **C12K 9/00**
[58] **Field of Search** 195/1.8

[56] **References Cited**

OTHER PUBLICATIONS

Dixon et al., Advances in Immunology, vol. 11 (1969) pp. 234 to 244.

Primary Examiner—Sam Rosen
Attorney, Agent, or Firm—Marn & Jangarathis

[57] **ABSTRACT**

Transfer factor is produced by in vitro culture of lymphoblastoid cell lines after induction with transfer factor, which may be mono- or poly- specific. The produced transfer factor is then extracted from the lymphoblastoid cell lines.

3 Claims, No Drawings

United States Patent [19]
Debabov et al.
[11] **4,278,765**
[45] **Jul. 14, 1981**

[54] **METHOD FOR PREPARING STRAINS WHICH PRODUCE AMINOACIDS**

[76] Inventors: **Vladimir G. Debabov**, ulitsa Miklukho-Maklaya, 43, kv. 57; **Jury I. Kozlov**, Mikroraion 2, korpus 3, kv. 178; **Nelli I. Zhdanova**, Leningradskoe shosse, 112, korpus 3, kv. 748; **Evgeny M. Khurges**, ulitsa Tikhvinskaya, 1/13, kv. 16; **Nikolai K. Yankovsky**, ulitsa Verkhnaya Radischevskaya, 13/15, kv. 59; **Mikhail N. Rozinov**, 3 Frunzenskaya ulitsa, 6, kv. 161; **Rustem S. Shakulov**, ulitsa Krasnogo Mayaka, 14, korpus 2, kv. 106; **Boris A. Rebentish**, ulitsa 11 Sokolnicheskaya, 12, kv. 16; **Vitaly A. Livshits**, ulitsa Kirovogradskaya, 24, korpus 3, kv. 8; **Mikhail M. Gusyatiner**, Suschevsky val, 22, kv. 28; **Sergei V. Mashko**, ulitsa Nizhnaya Pervomaiskaya, 5, kv. 16; **Vera N. Moshentseva**, ulitsa Krupskoi, 5, kv. 67; **Ljudmila F. Kozyreva**, 4 Novopodmoskovny pereulok, 4, kv. 80; **Raisa A. Arsatiants**, Mikroraion 2, korpus 3, kv. 178, all of Moscow, U.S.S.R.

[21] Appl. No.: **52,744**

[22] Filed: **Jun. 28, 1979**

[30] **Foreign Application Priority Data**

Jun. 30, 1978 [SU] U.S.S.R. 2639616

[51] **Int. Cl.**[3] **C12N 15/00**
[52] **U.S. Cl.** **435/172**; 435/115; 435/317; 435/820
[58] **Field of Search** 435/172

[56] **References Cited**

PUBLICATIONS

Sinsheimer, Ann. Rev. Biochem 46, 415–438, 1977.
Itokura et al., Science vol. 98, pp. 1056–1063.

Primary Examiner—Alvin E. Tanenholtz
Attorney, Agent, or Firm—Lackenbach, Lilling & Siegel

[57] **ABSTRACT**

A method for constructing strains which produce aminoacids comprising combining of a DNA chromosome fragment of a donor microorganism containing genes controlling the synthesis of a selected aminoacid and having a mutation destroying the negative regulation of the synthesis of this aminoacid with a vector DNA molecule to form a hybrid DNA molecule. Use is made of a vector DNA molecule capable of providing amplification of the hybrid DNA molecule. The resulting hybrid DNA molecule is used for transforming cells of the recipient strain having the mutation blocking the synthesis of the selected aminoacid in this strain and the mutation partly blocking the related step of metabolism of this aminoacid to yield the strain capable of increased productivity of the selected aminoacid.

4 Claims, 5 Drawing Figures

United States Patent [19]
Goodman et al.
[11] **4,283,489**
[45] **Aug. 11, 1981**

[54] **PURIFICATION OF NUCLEOTIDE SEQUENCES SUITABLE FOR EXPRESSION IN BACTERIA**

[75] Inventors: **Howard M. Goodman**, Seeburg; **John Shine**; **Peter Horst**, both of San Francisco, all of Calif.

[73] Assignee: **The Regents of the University of California**, San Francisco, Calif.

[21] Appl. No.: **97,049**

[22] Filed: **Nov. 23, 1979**

Related U.S. Application Data

[62] Division of Ser. No. 836,218, Sep. 23, 1977, abandoned.

[51] **Int. Cl.**[3] **C12Q 1/68**
[52] **U.S. Cl.** **435/6**; 435/89; 435/91
[58] **Field of Search** 435/6, 89, 91

[56] **References Cited**

U.S. PATENT DOCUMENTS

4,080,261 3/1978 Shibata et al. .

OTHER PUBLICATIONS

Panet et al., Biochemistry 12, pp. 5045–5050; 1973.
Roberts, Crit. Rev. Biochem. 4, pp. 123–164; 1976.
Sgaraniella et al., Proc. Nat. Acad. Sci. U.S.A., 67, pp. 1468–1475; 1970.
Ullrich et al., Science 196, pp. 1313–1319; 1977.
Maniatis et al., Biochemistry 14, pp. 3787–3794; 1974.
Maxam et al., Proc. Nat. Acad. Sci. U.S.A. 74, pp. 560–564; 1977.
Middleton et al., Journal of Nirology 10, pp. 42–50; 1972.
Modrick et al., J. Biol. Chem. 245, pp. 3626–3631; 1972.
Efstratiadis et al., Cell; 4, pp. 367–378; 1975.
Glisin et al., Biochemistry 13, pp. 2633–2637; 1974.
Horiuchi et al., Proc. Nat. Acad. Sci. U.S.A. 72, pp. 2555–2558; 1975.
Kacian et al., Methods in Enzymology 29, pp. 150–173; 1974.
Aviv et al., Proc. Nat. Acad. Sci. U.S.A. 69; 1408–1412 (1972).
Cox, Methods In Enzymology; 12B, pp. 120–129; 1968.
Dingman et al., Biochemistry 7, pp. 659–668.
Efstratiadis et al., Cell; 7, pp. 279–288; 1976.

Primary Examiner—Robert J. Warden
Attorney, Agent, or Firm—Keil & Witherspoon

[57] **ABSTRACT**

A method has been discovered for purifying a specific desired DNA sequence, starting from RNA heterogeneous in length and sequence. The steps of the method include making complementary DNA transcripts of the RNA by means of an enzyme such as reverse transcriptase, subjecting the DNA transcripts to the action of one or more selected restriction endonuclease enzymes, and fractionating the fragments produced by endonuclease action according to their length. By this method it is possible to isolate homogeneous length DNA fragments complementary to RNA sequences present in the original preparation in as low a frequency as two percent. A method is also disclosed for further purifying the homogeneous length fragments and for determining their final purity. Using the disclosed methods, a DNA fragment approximately 550 nucleotides in length coding for a portion of the peptide hormone, human chorionic somatomammotropin, has been purified to greater than 99% purity.

5 Claims, 5 Drawing Figures

United States Patent [19]
Johnson
[11] **4,277,564**
[45] **Jul. 7, 1981**

[54] **PREPARING ENTOMOCIDAL PRODUCTS WITH OLIGOSPOROGENIC MUTANTS OF BACILLUS THURINGIENSIS**

[75] Inventor: **Donovan E. Johnson**, Peoria, Ill.

[73] Assignee: **The United States of America as represented by the Secretary of Agriculture**, Washington, D.C.

[21] Appl. No.: **110,864**

[22] Filed: **Jan. 9, 1980**

[51] **Int. Cl.**[3] **C12N 3/00**
[52] **U.S. Cl.** **435/242**; 435/172; 435/253; 435/832
[58] **Field of Search** 435/242, 88, 832, 172, 435/253

[56] **References Cited**

U.S. PATENT DOCUMENTS

3,578,383 9/1973 Shieh et al. ..... 435/832 X
4,133,716 1/1979 Zamola et al. 435/242

OTHER PUBLICATIONS

Yousten, "A Method for the Isolation of Asporogenic Mutants of Bacillus Thuringiensis", Con. J. Microbiology, vol. 24 (1978) pp. 492–494.

Primary Examiner—R. B. Penland
Attorney, Agent, or Firm—M. Howard Silverstein; David G. McConnell; Curtis P. Ribando

[57] **ABSTRACT**

Six oligosporogenic mutant strains obtained from *Bacillus thuringiensis* subsp. kurstaki yield parasporal products substantially free of interfering spores when cultivated under normal sporulation conditions. These parasporal products have utility in the biological control of pest insects.

9 Claims, No Drawings

United States Patent [19]
Yukawa et al.
[11] **4,276,380**
[45] **Jun. 30, 1981**

[54] **PRODUCTION OF L-AMINO ACIDS**

[75] Inventors: **Hideaki Yukawa**; **Kazuoki Osumi**; **Terukazu Nara**; **Yoshihiro Takayama**, all of Ami, Japan

[73] Assignee: **Mitsubishi Petrochemical Co., Ltd.**, Tokyo, Japan

[21] Appl. No.: **120,963**

[22] Filed: **Feb. 13, 1980**

[30] **Foreign Application Priority Data**

Feb. 13, 1979 [JP] Japan 54-15341
May 18, 1979 [JP] Japan 54-61109

[51] **Int. Cl.**[3] **C12P 13/08**
[52] **U.S. Cl.** **435/115**; 435/247; 435/822; 435/172
[58] **Field of Search** 435/115

[56] **References Cited**

U.S. PATENT DOCUMENTS

3,907,641 9/1975 Nakayama et al. ..... 435/115 X
3,920,520 11/1975 Tanaka et al. 435/115

Primary Examiner—Lionel M. Shapiro
Attorney, Agent, or Firm—Sughrue, Rothwell, Mion, Zinn and Macpeak

[57] **ABSTRACT**

A process for producing L-valine or L-lysine which comprises aerobically culturing a bacterium belonging to the genus Acinetobacter, which utilizes ethanol and has an ability to produce and accumulate L-valine or L-lysine, in a culture medium in which ethanol is the main carbon source to produce and accumulate L-valine and/or L-lysine and collecting.

3 Claims, No Drawings

United States Patent [19]

Sugimoto et al.

[11] **4,285,929**

[45] * **Aug. 25, 1981**

[54] **TYPE II INTERFERON AND AGENTS THEREOF**

[75] Inventors: **Kaname Sugimoto; Shokichi Yuen,** both of Okayama, Japan

[73] Assignees: **Shin Ashida,** Hyogo; **Ken Hayashibara,** Okayama, both of Japan

[*] Notice: The portion of the term of this patent subsequent to Jun. 30, 1998, has been disclaimed.

[21] Appl. No.: **109,861**

[22] Filed: **Jan. 7, 1980**

Related U.S. Application Data

[63] Continuation-in-part of Ser. No. 5,585, Jan. 22, 1979.

[30] **Foreign Application Priority Data**

Jan. 18, 1979 [JP] Japan 54/4544

[51] **Int. Cl.**[3] **A61K 45/02; A61K 39/00**

[52] **U.S. Cl.** **424/85; 435/68; 435/811**

[58] **Field of Search** 424/85; 434/68, 811

[56] **References Cited**

PUBLICATIONS

Chemical Abstracts, vol. 82, p. 352, Abstract No. 1462v, Anjinsen et al., "Partial Purification of Human Interferon by Affinity Chromatography", 1974.

Chemical Abstracts, vol. 89, p. 598, Abstract No. 105634a, Berthold et al., "Purification and In Vitro Labeling of Interferon From a Human Fibroblastoid Cell Line", 1978.

Chemical Abstracts, vol. 83, p. 334, Abstract No. 25879v, Borecky et al., "Stimulation of Interferon Production in Macrophages", 1975.

Miyoshi, I., et al., Cancer, vol. 40, pp. 2999-3003, 1977.

Dianzani, F., et al., Advances in Experimental Medicine and Biology, vol. 110, pp. 119-131, 1978.

Klein, G., et al., "Sensitivity of Epstein-Barr Virus (EBV) Producer and Non-Producer Human Lymphoblastoid Cell Lines to Superinfection with E.B. Virus", *Int. J. Cancer,* 10, 44-57, (1972).

J.L.M., "Current and Future Sources of Interferon", *Science,* vol. 204, pp. 1184-1185, Jun. 15, 1979.

Epstein, L. B. "Mitogen and Antigen Induction of Interferon In Vitro and In Vivo", *Texas Reports on Biology and Medicine, vol. 35, 1977, pp. 42-56.*

Chemical Abstracts, vol. 81, p. 391, Abst. No. 167513d, Sano et al., "Production of Mouse Interferon . . . ", 1974.

Chemical Abstracts, vol. 79, p. 298, Abst. No. 90455k, Tovey et al., "Production of Interferon . . . ", 1973.

Chemical Abstracts, vol. 74, p. 190, Abst. No. 21415g, Khesin et al., "Cytological Study of a Peritoneal . . . ", 1971.

Chemical Abstracts, vol. 89, p. 382, Abst. No. 88763r, Zavetskii et al., "Matrix Synthesis of Mouse Interferon . . . ", 1978.

De Maeyer-Guignard, J., "Mouse Leukemia: Depression of Serum Interferon Production", *Science,* vol. 177, pp. 797-799, (1972).

Sata, J., "The Current Situation of the Maintenance and Duration of Tissue Culture Cell Lines in Japan", *Protein, Nucleic Acid and Enzyme;* vol. 20, No. 4, pp. 616-643, (1975).

Strander, H., et al., "Production of Human Lymphoblastoid Interferon", *Journal of Clinical Microbiology, vol. 1, No. 1, 116-117, Jan. 1975.*

Miyoshi, I., et al., "Human B Cell, T Cell and Null Cell Leukaemic Cell Liner Derived from Acute Lymphoblastic Leukaemiai", *Nature,* vol. 267, No. 5614, pp. 843-844, Jun. 30, 1977.

Interferon, by S. Kobayashi, Kodansha, Ltd., Tokyo, Japan, 1975.

Interferon and its Clinical Potential, by D. H. J Tyrell, William Heinemann Medical Books, Ltd., London, 1976.

Protein, Nucleic Acid and Enzyme, vol. 21, No. 4, (1976), "Interferon-Problems Concerning its Application".

Primary Examiner—Delbert R. Phillips
Assistant Examiner—Blondel Hazel
Attorney, Agent, or Firm—Browdy and Neimark

[57] **ABSTRACT**

The present invention relates to processes which are easily applicable for industrial production of Type II interferon and Type II interferon-containing agents.

Particularly, the present processes are based on the invention that a large amount of high-titred Type II interferon is easily obtainable by transplanting established human cells in other warm-blooded animal body or inoculating the cells in a culture medium charged in a filter-membrane-interposed diffusion chamber which is designed and fitted in or to the animal body so that the cells can grow on its nutrient body fluid, multiplying the transplanted or inoculated cells in the warm-blooded animal body or the diffusion chamber utilizing the body fluid, then exposing the multiplied cells to the action of a Type II interferon inducer in vivo or in vitro to induce Type II interferon, and purifying and separating the induced Type II interferon. The agents containing Type II interferon obtained by the method disclosed herein are effective and superior for treating and preventing Type II interferon-sensitive diseases.

10 Claims, No Drawings

United States Patent [19]

Curtiss, III

[11] **4,190,495**

[45] **Feb. 26, 1980**

[54] **MODIFIED MICROORGANISMS AND METHOD OF PREPARING AND USING SAME**

[75] Inventor: **Roy Curtiss, III,** Birmingham, Ala.

[73] Assignee: **Research Corporation,** New York, N.Y.

[21] Appl. No.: **727,365**

[22] Filed: **Sep. 27, 1976**

[51] **Int. Cl.**[2] **C12K 1/02**

[52] **U.S. Cl.** **435/172; 435/849**

[58] **Field of Search** ..... 195/28 N, 1, 96, 76, 195/78

[56] **References Cited**

PUBLICATIONS

J. Mol. Biol., vol. 53, pp. 159-162 (1970).

Science, vol. 185, p. 303 (1974).

Primary Examiner—Alvin E. Tanenholtz
Attorney, Agent, or Firm—Cooper, Dunham, Clark, Griffin & Moran

[57] **ABSTRACT**

Microorganisms have been developed which may be characterized as possessing substantially all of the following qualities or capabilities:

(a) capable of having foreign genetic information introduced thereinto and recovered therefrom along with its expression with production of useful gene products;

(b) the microorganism being dependent for growth and survival upon defined conditions;

(c) the microorganism being incapable of establishment or growth or colonization and/or survival under conditions or in ecological niches that are considered to be natural and/or undesirable for said microorganism;

(d) the microorganism being capable of causing genetic information incorporated therein to undergo degradation under conditions or ecological niches that are considered to be natural and/or undesirable for said microorganism;

(e) the microorganism being capable of permitting cloning vectors incorporated therein to be dependent for their replication, maintenance and/or function on said microorganism;

(f) the microorganism being substantially incapable of transmitting cloning vectors or recombinant DNA molecules incorporated therein to other organisms under conditions or ecological niches that are considered to be natural and/or undesirable for said microorganism;

(g) the microorganism being capable of being monitored by suitable means and/or techniques without substantial alteration of said microorganism; and

(h) the microorganism being susceptible of substantially minimal contamination with other organisms when recombinant DNA molecules are incorporated therein and being substantially incapable of contaminating other organisms when incorporated therein or consumed thereby when recombinant DNA molecules are incorporated in said microorganism.

Examples of such microorganisms are *Escherichia coli* K-12 χ1776, *Escherichia coli* K-12 χ1972, *Escherichia coli* K-12 χ1976 and *Escherichia coli* K-12 χ2076. Additionally, techniques have been developed and employed for imparting special properties, e.g. genetic properties, to microorganisms which render the resulting microorganisms unique. Also, techniques have been developed for the handling of plasmid and/or bacteriophage cloning DNA vectors for eventual insertion into microorganisms for testing therein, such as the above-mentioned microorganisms, and techniques have been developed for the transformation of microorganisms, such as the above-identified microorganisms, for the introduction of recombinant DNA molecules thereinto. Also, techniques have been developed in connection with the development or production of the above-identified microorganisms which impart special genetically-linked properties thereto, which techniques are applicable to a large number and diversity of microorganisms, including not only bacteria but also yeast and other cellular material.

11 Claims, No Drawings

MUTATION/GENETIC ENGINEERING

FOREIGN PATENT DOCUMENTS

Because of the importance of international patent activity in the field of genetic engineering, this profile includes a list of recent foreign patent documents in the International Patent Classification "Genetic Engineering" (C12N 15/00). The documents listed were published between August, 1980 and March, 1982.

Since a patent is enforceable only in the country which grants it, it is common practice to seek patent protection on a single invention in several countries. This multiple patent application filing results in the issuance of several patent documents, each from a different country, but all to the same invention. Such patents form a "family."

The documents listed in this section represent the first patent in a family to be published in a "major" country*. In some cases, no other family patents have, as yet, been granted. To eliminate duplication of the information, any patents which, at the present time, have a corresponding U.S. patent in the family are not included.

The following Table includes the publication date, the patent document number, the origin of the document, the subject of the disclosure, and the assignee or inventor.

The data resource used for this selection of patents is the data base developed by Derwent Publications Ltd., of London. By special arrangement, Derwent, a commercial patent information firm, has provided its data base to the U.S. Patent and Trademark Office for various purposes, including support of patent activity analysis.

---

*"Major" country is defined by Derwent Publications, Ltd., the developer of the data base used in selecting this information. Documents published in a "major" country include, among others, those published by the United States, Belgium, Federal Republic of Germany, France, Great Britain, the Netherlands, Japan and the Soviet Union. The expression also includes documents published by the European Patent Office, as well as "World Patents," which are published international applications filed under the Patent Cooperation Treaty.

MUTATION/GENETIC ENGINEERING: FOREIGN PATENT DOCUMENTS

DATE	DOCUMENT NO.	DOCUMENT ORIGIN*	SUBJECT MATTER	ASSIGNEE or INVENTOR
02-17-82	029229	JA	Breeding novel matsutake fungus	Topy Kogyo KK
03-24-82	48081	EP	DNA for replication and stable mitotic maintenance in host	University of California
03-17-82	47600	EP	DNA transfer vectors coding for bovine growth hormone	University of California
02-05-82	022697	JA	Insulin production	H. Taniguchi
02-05-82	2487851	FR	Human insulin production by culturing human cells	Hayashibara Seibutsu
03-03-82	46669	EP	New somatostatin and precursors	University of California
01-22-82	012994	JA	Restriction endonuclease preparation from Thermus thermophilus culture	Mitsubishi Chem Ind
01-22-82	2486961	FR	Mutant strain of Escherichia coli	Unisearch Ltd
02-17-82	46039	EP	Synthetic genes coding for urogastrone expression	G D Searle & Co
02-10-82	45573	EP	Eukaryotic autonomously replicating segment	Stanford University
10-22-81	135498	JA	Plasmid antibiotic material preparation	Upjohn Co
01-21-82	00158	WO	Amplification of eukaryotic genes in mammalian cells	Salk Inst for Biological Studies
04-27-81	823427	SU	Microbial lysogenic clone production	Rost Anti-Plague
04-27-81	823426	SU	Propionibacterium shermanii-149 microbial strain	Altai Butter Cheese
12-24-81	2485037	FR	Bacterial strain of Leuconostoc B-44-40	J. Silver
01-27-82	44722	EP	Human hybridoma cell production and monoclonal antibodies	Stanford University
01-27-81	44710	EP	Synthetic specific antigenic determinants	Scripps Clinic & Research Foundation
01-27-81	44441	EP	Monoclonal antibodies to drugs	Scripps-Miles Inc.
09-07-81	756839	SU	Microbiological production of protease	AS USSR Microbiol
12-18-81	2484448	FR	Preparation of L-arginine by fermentation	Ajinomoto KK
01-20-82	2079291	GB	Mature human leukocyte interferon polypeptides	Hoffmann-LaRoche; Genentech Inc
01-13-82	43718	EP	Rat myeloma cell line not expressing immunoglobulin chain	National Res Dev Corp
01-13-82	2078731	GB	Fermentative production of L-tryptophan	Showa Denko KK
01-06-82	43075	EP	Incorporating genetic material into intact cells	Studiengesellschaft Kohle MBH
12-24-81	03663	WO	Human cell line derived from hepatic tumor	Wistar Inst Anatomy
12-23-81	42246	EP	Non-glycosylated human fibroblast interferon	Japan Cancer Res; Harvard College
11-20-81	2482622	FR	Lysine production by culturing Corynebacterium or Brevibacterium	Ajinomoto KK
12-16-81	41767	EP	Cloning vectors containing lambda-phage promoter and operator	Biogen NV
12-11-81	889182	BE	Live herpes simplex vaccine	Asta Werke AG
12-10-81	03498	WO	Stimulating production of gamma interferon	New York University
12-09-81	41313	EP	DNA sequences and recombinant DNA molecules transformed hosts	Biogen NV

*KEY TO ABBREVIATIONS

BE	Belgium	FR	France	NL	Netherlands
DE	Federal Republic of Germany	GB	Great Britain	SU	Soviet Union
EP	European Patent	JA	Japan	WO	Published International Application (Patent Cooperation Treaty)

MUTATION/GENETIC ENGINEERING: FOREIGN PATENT DOCUMENTS

DATE	DOCUMENT NO.	DOCUMENT ORIGIN*	SUBJECT MATTER	ASSIGNEE or INVENTOR
12-09-81	2076853	GB	High yield fermentation production of L-glutamic acid	Ajinomoto KK
12-02-81	40963	EP	Hybrid plasmid pic1021	Upjohn Co
12-02-81	40922	EP	Polypeptides with foot and mouth disease antigen specificity	Biogen NV
11-25-81	40466	EP	Adaptor oligo-nucleotide containing recognition site	Canadian Pat & Dev Ltd
10-23-81	2480782	FR	Highly specific antibody production	T. Hamaoka
11-18-81	39743	EP	Small recombinant DNA plasmid rings	Microlife Technics
10-16-81	8101349	NL	Live vaccines against bacterial infection	Ramot University
11-11-81	2075056	GB	Proline producing Escherichia transformant	Ajinomoto KK
11-11-81	2075055	GB	Methionine producing Escherichia transformant	Ajinomoto KK
10-28-81	38765	EP	Transforming cells with hepatitis virus DNA	Inst Pasteur; Inst Nat Sante Recherche Medicale
10-28-81	38642	EP	Monoclonal antibodies to hepatitis B surface antigen	National Research Development Corp
10-21-81	38182	EP	Synthesis of mature protein or polypeptide	Harvard College
10-21-81	38156	EP	Plasmid PUC 10 of molecular weight 6.8 mega-daltons	Upjohn Co
10-15-81	102899	WO	Monoclonal antibody having specificity to interferon-alpha	D. S. Secher
10-14-81	37723	EP	Cloned DNA segments for expression in eucaryotic cells	University of California
10-14-81	37687	EP	Recombinant DNA segment for insertion into plasmid	Abbott Laboratories
01-23-81	798173	SU	Alpha-galactosidase microbiological production	AS USSR Biochem Ins
01-23-81	798172	SU	Microbiological production of citric acid	Lengd Food Ind Res
10-14-81	2073245	GB	Bovine growth hormone from new strains of E coli	Yeda Res & Dev Co Ltd
10-07-81	37273	EP	Genetically modified autotrophic or methylotropic bacteria	Imperial Chem Industries Ltd
08-31-81	109587	JA	Genetically recombined Corynebacterium microbial strain preparation	Kyowa Hakko Kogyo KK
09-30-81	36776	EP	Production of polypeptides from recombinant bacteria	Genentech Inc
09-23-81	36259	EP	Production of predetermined protein	Cetus Corp
09-23-81	36258	EP	Aspartame production from synthetic polypeptide	Cetus Corp
09-16-81	35914	EP	Cointegrate plasmids from E. coli and Streptomyces espinosus DNA	Upjohn Co
09-16-81	35831	EP	Glutamate dehydrogenase gene containing microorganism	Imperial Chem Industries Ltd
09-16-81	35781	EP	Manufacturing transfer vector containing sequence for mammalian peptide	University of California
09-03-81	02426	WO	Insertion of DNA into eucaryotic cells by co-transformation	R. Axel
09-03-81	02425	WO	Eucaryotic cells co-transformed with DNA linked to promoter	R. Axel

*KEY TO ABBREVIATIONS

BE	Belgium	FR	France	NL	Netherlands
DE	Federal Republic of Germany	GB	Great Britain	SU	Soviet Union
EP	European Patent	JA	Japan	WO	Published International Application (Patent Cooperation Treaty)

MUTATION/GENETIC ENGINEERING: FOREIGN PATENT DOCUMENTS

DATE	DOCUMENT NO.	DOCUMENT ORIGIN*	SUBJECT MATTER	ASSIGNEE or INVENTOR
09-09-81	35454	EP	Desacetyl-thymosin alpha 1 with immunostimulant activity	Genentech Inc
09-09-81	35384	EP	Deoxy nucleotide linkers for cloned DNA coding sequences	University of California
07-27-81	092784	JA	Acetic acid requiring Brevibacterium	Ajinomoto KK
08-26-81	34307	EP	Microbiologically produced interferon polypeptide	Hoechst AG
07-16-81	087600	JA	Recombinant containing transcriptase genes	Gan Kenkyukai ZH
08-26-81	2069504	GB	Microbiologically prepared human interferon	Hoechst AG
08-26-81	2069503	GB	Recombinant DNA containing amylase coding gene	CPC International Inc
12-09-81	785359	SU	Pseudomonas aeruginasa microbial strain	AS UKR Colloid Chem
12-09-81	785358	SU	Achromobacter eurydice TK microbial strain	AS UKR Colloid Chem
12-09-80	785357	SU	Micrococcus aurantiacus variety Micrococcus rubecseus 53	AS Kaza Microbiol
08-19-81	2068969	GB	Expression of gene coding by fusing gene	Upjohn Co
07-03-81	2472610	FR	Fermentative L-glutamic acid production	Ajinomoto KK
08-12-81	33702	EP	2-Nitro substituted naphthofuran derivatives	Agence Nat Valorisation Recherche
08-12-81	33579	EP	Monoclonal antibody reactive with monocytes and granulocytes	Ortho Pharm Corp
08-12-81	33578	EP	Monoclonal antibody reactive with peripheral T cells and thymocytes	Ortho Pharm Corp
08-12-81	33439	EP	20-Carboxy-pregna-1,4,17(20)-trienone and its methyl ester	Henkel KGAA
07-30-81	2067574	GB	Polypeptide with amino acid sequence of primate proinsulin	Hoechst AG
06-12-81	2470797	FR	Coproporphyrin III production by cultivation of Arthrobacter species	Nippon Oil KK
07-22-81	32238	EP	Recombination bacteriophage for heterologous cloning of DNA	Rochester University
07-16-81	887991	BE	Optimisation of Polypeptide production by microorganisms	Harvard College
11-15-81	779383	SU	Acid proteinase microbiological production	Antibiotics Enzymes
07-15-81	32134	EP	DNA sequences coding for interferon-like polypeptides	Biogen NV
05-29-81	2469456	FR	Uroporphyrin III production by culture of Arthrobacter strains	Nippon Oil KK
05-29-81	2469454	FR	Hybrid plasmids of yeast	Agence Nat Valorisation Recherche
10-23-80	773073	SU	Sparkling muscatel wine production	AS USSR Dagestan
10-23-80	773072	SU	Yeast strain Saccharomyces cerevisiae	Protein Biosynth
10-15-80	771159	SU	Microbiological production of neutral proteinase	AS Lith Biochem Ins
06-24-81	30815	EP	New monoclonal antibody against particular human thymocyte antigen	Ortho Pharm Corp
06-24-81	30814	EP	Monoclonal antibody against particular human thymocyte antigen	Ortho Pharm Corp
06-24-81	30727	EP	High yield microbiological production of L-valine	Ajinomoto KK
06-17-81	30450	EP	Hybridoma ATCC CRL-8014	Ortho Pharm Corp
06-17-81	30449	EP	Hybridoma ATCC CRL-8020	Ortho Pharm Corp
06-17-81	30391	EP	Production of L-glutamic acid	Ajinomoto KK

*KEY TO ABBREVIATIONS

BE	Belgium	FR	France	NL	Netherlands
DE	Federal Republic of Germany	GB	Great Britain	SU	Soviet Union
EP	European Patent	JA	Japan	WO	Published International Application (Patent Cooperation Treaty)

MUTATION/GENETIC ENGINEERING: FOREIGN PATENT DOCUMENTS

DATE	DOCUMENT NO.	DOCUMENT ORIGIN*	SUBJECT MATTER	ASSIGNEE or INVENTOR
10-03-80	767204	SU	Production of extra cellular exo-nuclease	Bio-Eng Res Inst
06-01-81	887397	BE	Gene for expressing protein similar to human interferon	G. D. Searle & Co
06-10-81	2063882	GB	Highly purified human interferon preparation	Yeda Res & Dev Co Ltd; Inst Pasteur
05-14-81	887290	BE	Synthetic gene containing repeating codon sequence	G. D. Searle & Co
09-23-80	765359	SU	Yeast strain Candida krusei	Sibe Tech Inst
04-15-81	039790	JA	Yeast body preparation via protoplast fusion	Noda Inst Sci Res
04-15-81	039778	JA	Variety of Corynebacterium glutamicum	Ajinomoto KK
09-10-80	761561	SU	Alkaline protease microbiological production	Appl Enzymology Res
04-14-81	039099	JA	Plasmids with decomposing properties	Mitsubishi Chem Ind
04-10-81	2464300	FR	Preparation of strains of Salmonella abortus ovis	Inst Nat Recherche Agronomique
04-10-81	2464299	FR	Preparation of strains producing amino acids	Genetics & Ind Micr
05-20-81	28902	EP	Monoclonal antibody production	Bio-Response Inc
04-08-81	035981	JA	Brevibacterium variant strain	Ajinomoto KK
08-10-80	753897	SU	Aspergillus awamori fungal strain	Ferment Prods Res
05-06-81	28033	EP	DNA coding for polypeptide with interferon activity	Japanese Cancer Res; Gan Kenkyukai ZH
03-20-81	2462476	FR	Cosmids with gene for kanamycin resistance	Inst Pasteur; ANVAR
04-29-81	27662	EP	Eukaryotic cells containing DNA inserted via lipid vesicles	Max Planck Gesellschaft Wissenschaften
02-06-81	2458585	FR	Genetically engineered proteins for nutrition	Inst Pasteur
02-05-81	011792	JA	Production of DNA relaxing enzyme	Rikagaku Kenkyusho
03-05-81	00577	WO	Nucleic acid coding for hepatitis B antigen	Inst Pasteur; F. Galibert; Inst Nat Sante Recherche Medicale; ANVAR
01-20-81	005093	JA	Heat-resisting enzyme preparation	Mitsubishi Chem Ind
03-11-81	2055805	GB	Fermentative production of L-histidine	Ajinomoto KK
02-11-81	23882	EP	Plasmid vectors and bacteria containing alkaline phosphatase gene	Schering AG
02-12-81	3027922	DE	L-lysine production by fermentation	Ajinomoto KK
02-11-81	2053906	GB	L-phenylalanine by fermentation of mutants	Ajinomoto KK
02-04-81	23397	EP	Hetero-polysaccharide biopolymer PS 87	Unilever Ltd
02-05-81	2930794	DE	Preparation of microorganisms with constitutive acylase	Gesellschaft Biotech Forschung
11-25-80	150893	JA	Arthrobacter simplex microbes	Mitsubishi Chem Ind
01-21-81	22685	EP	Vectors for transfer of genes in eukaryotic cells	Inst Pasteur
12-30-80	885196	BE	DNA transfer vectors containing codes for human insulin precursors	University of California
11-18-80	148083	JA	Mutant strain comprising microorganism of genus Nocardia	Mitsubishi Chem Ind
12-28-80	884012	BE	Cloning vector containing semi-synthetic gene	Genentech Inc

*KEY TO ABBREVIATIONS

BE	Belgium	FR	France	NL	Netherlands
DE	Federal Republic of Germany	GB	Great Britain	SU	Soviet Union
EP	European Patent	JA	Japan	WO	Published International Application (Patent Cooperation Treaty)

ENZYMES PER SE

This profile includes enzymes per se, enzyme compositions, and processes for preparing them. It also includes processes for separating enzymes from a source material, purifying enzymes, and treating enzymes to enhance or inhibit their activity. Enzymes are defined as proteinaceous materials which promote a chemical change in a starting material without being consumed in the reaction.

INCLUDED IN THIS PROFILE ARE ALL OF THE PATENTS FROM:

Class 435, Subclasses 183-234

ACTIVITY INDICES (1979-1981)

GROWTH	23.7%
FOREIGN SHARE	49.2%
CORPORATE OWNED	90.3%
GOVERNMENT OWNED	1.3%
U.S. OWNED OF FOREIGN	11.1%

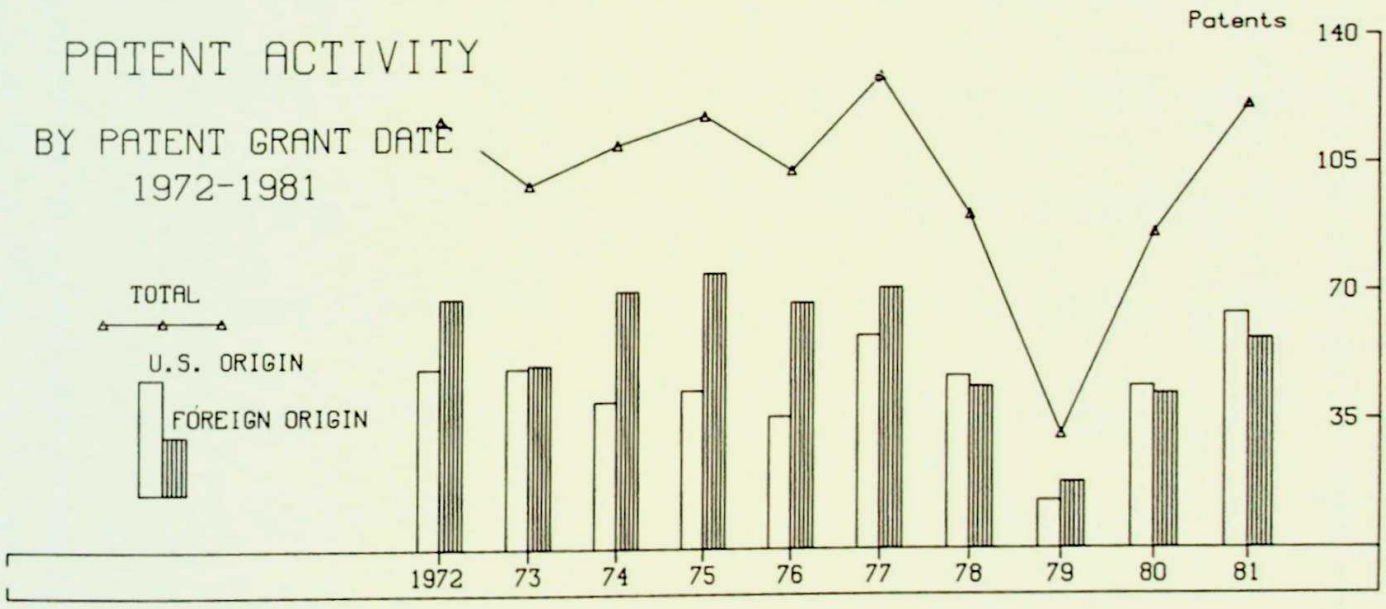

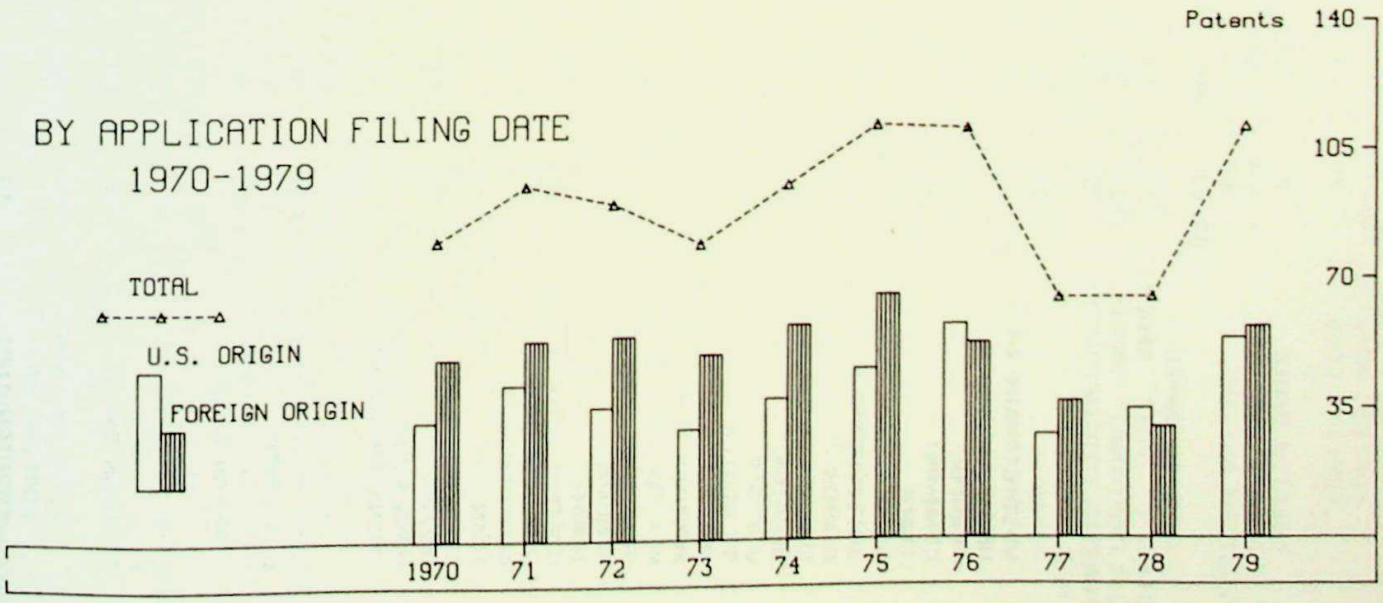

ENZYMES PER SE – PART 2A

PATENT ACTIVITY (1/63-12/81) BY DATE OF PATENT GRANT

	NUMBER OF PATENTS															
	63-67	1968	1969	1970	1971	1972	1973	1974	1975	1976	1977	1978	1979	1980	1981	TOTAL
TOTAL	208	30	48	40	87	117	99	110	118	103	129	91	31	86	121	1418
U.S. ORIGIN	131	18	37	20	48	49	49	40	43	36	58	47	13	44	64	697
FOREIGN ORIGIN	77	12	11	20	39	68	50	70	75	67	71	44	18	42	57	721
JAPAN	29	6	6	7	16	35	33	37	33	30	23	16	8	23	27	329
WEST GERMANY	10	2		5	10	12	3	7	12	10	10	7	4	6	7	105
UNITED KINGDOM	11		2	1		8	3	6	11	2	18	4	2	5	5	78
FRANCE	6	2		2	2	2	4	4	8	8	4	2			2	46
DENMARK	4				1	3	1	2	1	5	3	2			3	25
ITALY	2			1	1		2	1	1	2	3	3	1	1	5	23
NETHERLANDS	1				2	1	1	6	1		2	1	1	2	3	21
SWITZERLAND	4	1	1					3	1	1		4	2	1	1	19
CANADA	3		1	3		2	1		3	2	2	1				18
SWEDEN	4			1	1	2	1	2						2	1	14
BELGIUM			1		3	1	1		1	1	1			1		10
U.S.S.R.								1		1		3			2	7
S. AFRICA		1									2	1				4
AUSTRALIA					1				1	1						3
AUSTRIA	1									1	1					3
MEXICO									1	1						2
SPAIN	1										1					2
FINLAND											1			1		2
ISRAEL					1										1	2
CZECHOSLOVAKIA										1						1
NEW ZEALAND	1															1
ROMANIA								1								1
IRAN										1						1
IRELAND						1										1
HUNGARY									1							1
HONG KONG					1											1
CHINA (MAINLAND)						1										1
U.S. ORIGIN	131	18	37	20	48	49	49	40	43	36	58	47	13	44	64	697
U.S. CORP. OWNED	111	14	30	19	43	44	39	35	34	32	54	42	11	40	54	602
U.S. GOVT. OWNED	2	3	2		2	1	5		4	1	1	3			2	26
U.S. INDIV. OWNED	17		5		3	4	4	4	5	3	3	2	1	4	8	63
FOREIGN OWNED	1	1		1			1	1					1			6
FOREIGN ORIGIN	77	12	11	20	39	68	50	70	75	67	71	44	18	42	57	721
U.S. OWNED	4		1	2	8	8	3	6	5	6	5	4	2	4	7	65
FOREIGN OWNED	73	12	10	18	31	60	47	64	70	61	66	40	16	38	50	656
FOREIGN CORP.	63	11	10	14	30	50	45	60	66	51	56	36	15	35	46	588
FOREIGN GOVT.									2	1					1	4
FOREIGN INDIV.	10	1		4	1	10	2	4	2	9	10	4	1	3	3	64

ENZYMES PER SE

PATENT ACTIVITY (PATENTS GRANTED 1/67-12/81) BY DATE OF PATENT APPLICATION

	NUMBER OF PATENTED APPLICATIONS															
	PRE 68	1968	1969	1970	1971	1972	1973	1974	1975	1976	1977	1978	1979	1980	1981	TOTAL
TOTAL	175	70	92	81	96	91	80	96	112	111	65	65	111	16		1261
U.S. ORIGIN	110	37	43	32	42	36	30	38	46	58	28	35	54	10		599
FOREIGN ORIGIN	65	33	49	49	54	55	50	58	66	53	37	30	57	6		662
JAPAN	23	10	30	26	34	26	19	28	24	19	14	16	30	4		303
WEST GERMANY	12	11	5	9	2	6	8	11	8	7	9	3	6	2		99
UNITED KINGDOM	6	1	5	4	3	6	7	5	15	4	5	2	6			69
FRANCE	4	2	1	3	5	5	5	4	8	1	2		1			41
DENMARK	6	2	3			2	3	1		4	1	1	2			25
ITALY	1	1			2	1	1	2	3	4		5	1			21
NETHERLANDS		2	1		4	3	1		1	1	2	1	4			20
SWITZERLAND	4				1	3		1	1	4	2		1			17
CANADA	3	1		3			2	2		4						15
SWEDEN	2		1	2	2		1					1	2			11
BELGIUM	1	2	2		1	1		1		1		1				10
U.S.S.R.							1	1	1	1	1		2			7
S. AFRICA	1								1	1	1					4
AUSTRALIA	1						1	1								3
AUSTRIA	1							1	1							3
MEXICO							1		1							2
SPAIN									1							1
FINLAND										1			1			2
ISRAEL		1											1			2
CZECHOSLOVAKIA										1						1
NEW ZEALAND																
ROMANIA						1										1
IRAN																1
IRELAND				1												1
HUNGARY						1										1
HONG KONG			1													1
CHINA (MAINLAND)				1												1
U.S. ORIGIN	110	37	43	32	42	36	30	38	46	58	28	35	54	10		599
U.S. CORP. OWNED	94	33	39	26	34	32	26	30	43	55	20	30	49	9		520
U.S. GOVT. OWNED	6	2	2		4		1	4	1	1	2	1		1		25
U.S. INDIV. OWNED	7	2	2	5	3	4	3	4	2	2	5	4	5			48
FOREIGN OWNED	3			1	1						1					6
FOREIGN ORIGIN	65	33	49	49	54	55	50	58	66	53	37	30	57	6		662
U.S. OWNED	3	7	5	5	7	5	4	4	5	3	4		10			62
FOREIGN OWNED	62	26	44	44	47	50	46	54	61	50	33	30	47	6		600
FOREIGN CORP.	56	23	40	38	45	49	41	47	47	47	31	28	42	6		540
FOREIGN GOVT.							1	1	1				1			4
FOREIGN INDIV.	6	3	4	6	2	1	4	6	13	3	2	2	4			56

ENZYMES PER SE

Organizational Patenting: Ranked

NO. OF PATENTS	ASSIGNEES WITH 6 OR MORE PATENTS (1969-1981)
40	SYVA CO.
34	CPC INTERNATIONAL INC.
32	MILES LABORATORIES INC.
27	KYOWA HAKKO KOGYO CO. LTD.
26	HAYASHIBARA CO.
26	BOEHRINGER MANNHEIM G.M.B.H.
23	BAYER AKTIENGESELLSCHAFT
22	EASTMAN KODAK CO.
21	AJINOMOTO COMPANY INC.
18	STANDARD BRANDS INC.
18	PROCTER & GAMBLE CO.
17	MONSANTO CO.
16	A.E. STALEY MANUFACTURING CO.
15	TOYO JOZO CO., LTD.
15	BAXTER TRAVENOL LABORATORIES, INC.
14	TAKEDA CHEMICAL INDUSTRIES, LTD.
14*	AGENCE NATIONALE DE VALORISATION DE LA RECHERCHE (ANVAR)
13	KIKKOMAN SHOYU CO., LTD.
13	E.R. SQUIBB & SONS, INC.
10	GLAXO LABORATORIES LTD.
10	NOVO INDUSTRI A/S
10	IMPERIAL CHEMICAL INDUSTRIES LTD.
10	MERCK & CO. INC.
9	PABST BREWING CO.
9	RESEARCH CORP.
9	RIKAGAKU, KENKYUSHO
8	TANABE SEIYAKU CO. LTD.
8	SNAM PROGETTI S.P.A.
8	ABBOTT LABORATORIES
8	UNITED STATES OF AMERICA, AGRICULTURE
8	LEVER BROTHERS CO.
8	BEHRINGWERKE AKTIENGESELLSCHAFT
8	UPJOHN CO.
8*	NOVO TERAPEUTISK LABORATORIUM A/S
7	R.J. REYNOLDS TOBACCO CO.
7	COLGATE-PALMOLIVE CO.
7	AKZONA INC.
7	GREEN CROSS CORP.
7*	HAYASHIBARA BIOCHEMICAL LABORATORIES INC.
6	UNIVERSITY OF ILLINOIS FOUNDATION
6	EXXON RESEARCH & ENGINEERING CO.
6	HOKKAIDO SUGAR CO., LTD.
6*	MEIJI SEIKA KAISHA LTD.
6*	AMANO PHARMACEUTICAL CO., LTD.

*Composite Total. See Appendix A.

ORGANIZATIONAL PATENTING (1/69-12/81) - - ALPHA LISTING

ABBOTT LABORATORIES
3790447 - STREPTOCCOCCI DIAGNOSTIC METHOD
3865692 - METHOD FOR MAKING HIGHLY POTENT PLASMINOGEN
3930944 - UROKINASE PRODUCTION
3930945 - UROKINASE PRODUCTION
3957582 - PURIFICATION OF UROKINASE
4224408 - DEOXYRIBONUCLEIC ACID SYNTHESIS USING BINDING PROTEIN
4252896 - METHOD OF STABILIZING PEROXIDASE IN A SERUM PROTEIN BASED MEDIUM
4273866 - LIGAND ANALOG-IRREVERSIBLE ENZYME INHIBITOR CONJUGATES AND METHODS FOR USE

ADVANCE BIOFACTURES CORPORATION
3821364 - PROCESS OF PRODUCING COLLAGENASE

A. E. STALEY MANUFACTURING COMPANY
3532602 - PROCESS FOR REDUCING VISCOSITY OF STABILIZED STARCH SOLUTIONS
3556942 - METHOD FOR OBTAINING AMYLOSE FROM COOKED STARCH SOLUTIONS
3616219 - PROCESS FOR IMPROVED ENZYME CONVERTIBILITY OF STARCH
3630844 - STARCH CONVERSION SYRUPS
3654087 - METHOD OF PRODUCING AMYLO-1,6-GLUCOSIDASE
3654088 - METHOD OF PRODUCING AMYLO-1,6-GLUCOSIDASE
3654089 - PRODUCTION OF AMYLO-1,6-GLUCOSIDASE
3720583 - ENZYME HYDROLYSIS
3761420 - STABILIZED LIQUID ENZYME STAIN REMOVER
3783100 - NON-RETROGRADED THINNED HYDROLYZATES
3806415 - THINNING AND SACCHARIFICATION OF STARCH PASTES WITH GLUCOAMYLASE
3897305 - PROCESS FOR PRODUCING DEXTROSE
3956066 - GLUCOSE ISOMERIZING ENZYME
3963575 - PRODUCING PULLULANASE WITH ORGANISMS HAVING A SUPERIOR CAPACITY TO ELABORATE PULLULANASE
4026764 - DRY ISOMERASE ACTIVATION
4113565 - GLUCOSE ISOMERIZATION WITH IRON ION-THIOL ACTIVATOR ION-GLUCOSE ISOMERASE SYSTEMS

AGENCE NATIONALE DE VALORISATION DE LA RECHERCHE (ANVAR)
3616221 - ENZYMA METHOD FOR CONVERTING GLUCOSE IN GLUCOSE SYRUPS TO FRUCTOSE
3647625 - METHOD OF REDUCING RAFFINOSE CONTENT OF BEET MOLASSES
3689362 - ENZYMATIC METHOD FOR MANUFACTURE OF FRUCTOSE
3767526 - METHOD FOR INCREASING YIELD OF SUCROSE
3795585 - METHOD FOR MANUFACTURE OF ALPHA-GALACTOSIDASE
3832284 - METHOD FOR MANUFACTURE OF ALPHA-GALACTOSIDASE BY MICROORGANISMS
3833474 - ASPOROGENIC PROTEASE-PRODUCING STRAINS OF BACILLUS SUBTILIS
3920521 - SUPEROXIDE DISMUTASES AND THEIR APPLICATIONS AS OXIDATION INHIBITORS
3930028 - PROCESS FOR THE MICROBIOLOGICAL PURIFICATION OF DAIRY EFFLUENTS
3981773 - PROCESS FOR THE PREPARATION OF GALACTOSE AND BEVERAGES BASED ON GALACTOSE FROM SOLUTIONS CONTAINING LACTOSE
3992261 - METHOD FOR MANUFACTURE OF MALTOSE FROM STARCH BY ENZYMES CO-PRODUCED BY A SINGLE MICROORGANISM
3997402 - SUPEROXIDE DISMUTASE AND PROCESS FOR PRODUCTION
4013512 - METHOD FOR ADSORPTION AND ELUTION OF LIPID HYDROLYZING ENZYMES

AGRICULTURAL BIOLOGICALS CORPORATION
3705083 - PROCESS FOR PRODUCING COLLAGENASE

AJINOMOTO COMPANY INCORPORATED
3616234 - METHOD OF PREPARING PROTEASE FROM CANDIDA LIPOLYTICA
3622459 - METHOD OF PREPARING A PROTEOLYTIC ENZYME BY FERMENTATION
3677898 - ACID PROTEASE AND METHOD OF PREPARING THE SAME
3707505 - ENZYME-CONTAINING DETERGENT COMPOSITION
3715279 - RECOVERY OF PROTEASE VALUES FROM FERMENTATION BROTHS
3767532 - METHOD OF PRODUCING PROTEASE BY MICROORGANISM

ORGANIZATIONAL PATENTING (1/69-12/81) - - ALPHA LISTING

AJINOMOTO COMPANY INCORPORATED (CONTINUED)

3791924 - BIOLOGICAL METHOD OF PRODUCING PHENOLIC AMINO ACIDS
3808101 - BIOLOGICAL METHOD OF PRODUCING TRYPTOPHAN AND 5-SUBSTITUTED TRYPTOPHANS
3847744 - METHOD OF PRODUCING ELASTASES BY BACTERIA
3871963 - MICROBIAL PROTEASE AND PREPARATION THEREOF
3930948 - ENZYMATIC METHOD FOR PRODUCING AROMATIC ETHYLAMINES
3950223 - STABILIZING AND ENHANCING UROKINASE ACTIVITY
3957581 - METHOD OF PRODUCING PEPTIDASE
3960661 - METHOD FOR PRODUCING INOSINE BY FERMENTATION
4010258 - MICROBIAL AMYLASE INHIBITOR AND PREPARATION THEREOF WITH THE USE OF STREPTOMYCES DIASTICUS VAR. AMYLOSTATICUS
4022666 - ALPHA-AMYLASES FROM <I BACILLUS SUBTILIS
4071405 - METHOD OF PRODUCING SULFUR CONTAINING L-AMINO ACIDS
4106989 - THERMOSTABLE CELLULASE AND A METHOD FOR PRODUCING THE SAME
4119620 - NOVEL DIPEPTIDE DERIVATIVES, SALTS THEREOF, AND METHOD OF MEASURING ENZYME ACTIVITY
4169764 - PROCESS FOR PRODUCTION OF UROKINASE
4228241 - METHOD FOR PRODUCING A PEPTIDASE

AKTIEBOLAGET ASTRA
3509024 - ASPERGILLOPEPTIDASE FOR USE IN THERAPY AND A PROCESS FOR THE PREPARATION THEREOF
3622462 - PROCESS FOR MANUFACTURE OF AN ENZYME PREPARATION

AKZONA INCORPORATED
3791932 - PROCESS FOR THE DEMONSTRATION AND DETERMINATION OF REACTION COMPONENTS HAVING SPECIFIC BINDING AFFINITY FOR EACH OTHER
3839153 - PROCESS FOR THE DETECTION AND DETERMINATION OF SPECIFIC BINDING PROTEINS AND THEIR CORRESPONDING BINDABLE SUBSTANCES
3850752 - PROCESS FOR THE DEMONSTRATION AND DETERMINATION OF LOW MOLECULAR COMPOUNDS AND OF PROTEINS CAPABLE OF BINDING THESE COMP OUNDS SPECIFICALLY
3879262 - DETECTION AND DETERMINATION OF HAPTENS
4169012 - STABILIZED PEROXIDASE REAGENT FOR ENZYME IMMUNOASSAY
4228240 - STABILIZATION OF PEROXIDASE
4292403 - DETECTION AND/OR DETERMINATION OF IGM, IGA, IGD AND IGE IMMUNOGLOBULINS

ALFA FARMACEUTICI S.P.A.
3766009 - PROCEDURE FOR ENZYMATIC PRODUCTION OF SEMI-SYNTHETIC PENICILLINS

ALPHA PATENT LIMITED
4259447 - PROCESS FOR THE PRODUCTION OF UROKINASE IN PURE CONDITION

ALZA CORPORATION
3875013 - ARTICLE FOR DETECTING THE FERTILE PERIOD AND METHOD FOR USING SAME
3968011 - TEST IMPLEMENT AND TEST METHOD FOR COLORIMETRICALLY DETERMINING WHETHER A FEMALE IS FERTILE OR PREGNANT

AMANO PHARMACEUTICAL CO., LTD.
3875007 - LIPID METABOLISM IMPROVING AND ANTI-ATHEROMATIC AGENT
3983002 - PROCESS FOR PREPARATION OF CELLULASE
4229538 - PROCESS FOR PREPARING ACYL-COA SYNTHETASE LCF-18
4269942 - PROCESS FOR PREPARING ACYL-COA SYNTHETASE LCF-18

AMANO SEIYAKU KABUSHIKI KAISHA
3431175 - METHOD FOR THE PREPARATION OF A LIPOPROTEIN LIPASE BY CULTIVATING ORGANISMS
3728223 - PRODUCTION OF HYALURONIDASE FROM A STRAIN OF STREPTOMYCES

AMERICAN CYANAMID COMPANY
3434929 - PROCESS FOR PURIFYING PLASMIN
3444045 - PROCESS FOR PURIFYING STREPTOKINASE
3809617 - DEVICE FOR DETECTING ANTICHOLINESTERASE MATERIALS

ORGANIZATIONAL PATENTING (1/69-12/81) - - ALPHA LISTING

AMERICAN HOME PRODUCTS CORPORATION
3455784 - CONTROL OF ENZYME ACTIVITY IN FROZEN SYSTEMS

AMERICAN HOSPITAL SUPPLY CORPORATION
3898130 - RAPID ENZYMATIC HYDROLYSIS OF TRIGLYCERIDES
4223090 - REAGENTS FOR THE ENZYMATIC DETERMINATION OF TRIGLYCERIDES

A. NATTERMANN CIE GMBH
3925158 - PROCESS OF MANUFACTURING ENZYME PREPARATION RICH IN LIPASE
4088539 - PROCESS OF MANUFACTURING ENZYME PREPARATION RICH IN LIPASE

ANHEUSER-BUSCH, INCORPORATED
3813320 - METHODS OF MAKING GLUCOSE ISOMERASE AND OF COVERTING GLUCOSE TO FRUCTOSE
3992262 - MEDIA CONTAINING MOLASSES AND CORN STEEP LIQUOR FOR PRODUCING GLUCOSE ISOMERASE FROM ACTINOPLANES AND METHOD
4003793 - MEDIA CONTAINING MOLASSES AND SOY FLOUR FOR PRODUCING GLUCOSE ISOMERASE AND METHOD
4035235 - METHOD OF MAKING LIPOPHILIC STARCH DERIVATIVES

ARMOUR PHARMACEUTICAL COMPANY
3986927 - PROCESS FOR THE PURIFICATION AND STERILIZATION OF ACIDOPHILIC BIOLOGICALS BY EXTREME ACIDIFICATION AT COLD TEMPERATURES

ASAHI BREWERIES LTD.
3472737 - METHOD OF MAKING CEREAL MALT

ASAHI KASEI KOGYO KABUSHIKI KAISHA
4028187 - METHOD OF OBTAINING UROKINASE

A/S ORTHANA KEMISK FABRIK
4254535 - METHOD AND AN APPARATUS FOR MAKING BASIC MATERIAL FOR THE PRODUCTION OF A BIOLOGICALLY ACTIVE PREPARATION

ASTRA LAKEMEDEL AKTIEBOLAG
3684658 - ENZYMES AND PROCESS FOR THEIR PREPARATION
3838008 - STEREOSELECTIVE PREPARATION OF L-DOPA AND L-M-TYROSINE AND NOVEL COMPOUNDS
3849552 - PROTEASE INHIBITORS AND METHOD FOR PREPARATION

AYERST, MCKENNA + HARRISON LTD.
3912704 - PROTEASE INHIBITOR FROM HORSE URINE

BASF AKTIENGESELLSCHAFT
4235973 - MACROPOROUS POLYMERIC CARRIER FOR COVALENTLY BINDING PROTEINS, ITS PREPARATION AND ITS USE FOR FIXING ACTIVE PROTEINS
4266030 - MACROPOROUS POLYMERIC CARRIER FOR COVALENTLY BINDING PROTEINS, ITS PREPARATION AND ITS USE FOR FIXING ACTIVE PROTEINS

BATTELLE MEMORIAL INSTITUTE
4066505 - PROCESS FOR EXTRACTING A POLYPEPTIDE FROM AN AQUEOUS SOLUTION

BAXTER TRAVENOL LABORATORIES, INC.
3558433 - PROCESS FOR PURIFICATION OF CHYMOPAPAIN
3616233 - REMOVING ESTERASE FROM MICROBIAL RENNIN
3620924 - PRODUCTION OF ACID-ACTIVE LACTASE
3623957 - PREPARATION OF MICROBIAL ALKALINE PROTEASE BY FERMENTATION WITH BACILLUS SUBTILIS, VARIETY LICHENIFORMIS
3627643 - HIGH STRENGTH DEXTRANASE AND PROCESS OF PREPARATION
3629073 - ACID-ACTIVE LACTOSE
3684710 - MANNAN DEPOLYMERASE ENZYME COMBINATION
3708397 - SYRUP CONVERSION WITH IMMOBILIZED GLUCOSE ISOMERASE
3763010 - STABILIZED MICROBIAL RENNET
3855065 - PRODUCTION OF STREPTOKINASE
3899395 - LIPOLYTIC ENZYME RECOVERY METHOD

ORGANIZATIONAL PATENTING (1/69-12/81) - - ALPHA LISTING

BAXTER TRAVENOL LABORATORIES, INC. (CONTINUED)
3966543 - ENZYME-TREATED PAPER
4104030 - PHOTOMETRIC DETERMINATION OF PROTEIN, AND OF ENDOTOXIN WITH LIMULUS PROTEIN
4267272 - PROSTATIC ACID PHOSPHATASE IMMUNO ASSAY
4286056 - METHOD FOR MAKING THERAPEUTIC ENZYME COMPOSITIONS

BAYER AKTIENGESELLSCHAFT
3555000 - PLASMINOGEN ACTIVATOR AND ISOLATION THEREOF FROM STROMATA OF HUMAN ERYTHROCYTES
3558773 - CRYSTALLINE KALLIKREIN-INACTIVATOR AND PROCESS FOR PREPARING THE SAME
3620926 - PROCESS FOR THE ENRICHMENT OF L-ASPARAGINASE
3622461 - PROCESS FOR THE EXTRACTION OF L-ASPARAGINASE
3625829 - PURIFICATION OF CARBOXYPEPTIDASE B
3634196 - PROCESS FOR THE SEPARATION OF PYROGENS FROM CRUDE PREPARATIONS OF L-ASPARAGINASE
3650902 - PROCESS FOR THE STABILIZATION AND PURIFICATION OF L-ASPARAGINASE
3660237 - PROCESS FOR OBTAINING KALLEKREIN FROM PANCREAS OR SUBMANDIBULARIS GLANDS OF PIGS
3660239 - FIBRINOLYSOKINASES FROM STREPTOMYCES
3773624 - PROCESS FOR THE ENRICHMENT OF L-ASPARAGINASE
3834990 - ISOLATION OF ENZYMES AND ENZYME INHIBITORS
3871962 - PENICILLIN ACYLASE
3871964 - WATER-INSOLUBLE PEPTIDE MATERIALS
3876766 - GLYCOSIDE-HYDROLASE ENZYME INHIBITORS
3879546 - SACCHARASE INHIBITORS
3887434 - MICROBIOLOGICAL PRODUCTION OF INVERTASE
3905870 - PURIFICATION OF KALLIKREIN
3926730 - SEPARATION AND PURIFICATION OF ALPHA-AMYLASE
3930949 - PROCESS FOR THE PRODUCTION OF 7-AMINO-DELTA\3/ -CEPHEM DERIVATIVES
3951745 - GLYCOSIDE-HYDROLASE ENZYME INHIBITORS
4013510 - GLYCOSIDE-HYDROLASE ENZYME INHIBITORS
4019960 - PROCESS FOR THE PRODUCTION OF A SACCHARASE INHIBITOR
4144128 - POLYMERIC CARRIER BOUND LIGANDS

BECKMAN INSTRUMENTS INC.
3787289 - METHOD OF PRODUCING DEXTRANASE
4036697 - KINETIC ASSAY FOR ALPHA-AMYLASE
4097336 - REAGENT SYSTEM FOR BETA-AMYLASE ASSAY
4218535 - DETERMINATION OF ENZYME SUBSTRATE CONCENTRATION

BECTON, DICKINSON AND COMPANY
4038147 - METHOD FOR DETECTING ENDOTOXINS

BEECHAM GROUP LIMITED
3919415 - SUBSTANCE MM 4550 AND PROCESS FOR PRODUCING SAME
4113856 - ANTIBIOTIC MM 13902
4230804 - WATER-INSOLUBLE PENICILLIN ACYLASE PREPARATION
4267273 - ENZYME PREPARATION HAVING AFFINITY FOR WATER-IMMISCIBLE LIQUIDS
4285932 - ENZYME DERIVATIVES FOR USE IN THE TREATMENT OF VENOUS THROMBOSIS

BEHRINGWERKE AKTIENGESELLSCHAFT
3732146 - PROCESS FOR THE ISOLATION OF NATIVE, HIGHLY PURIFIED PLASMINOGEN
3901870 - DERIVATIVE OF ALPHA/1\ -FETOSPECIFIC SERUM PROTEIN AND PROCESS FOR ITS MANUFACTURE
3930953 - GLUCOSE OXIDASE POOR IN CATALASE AND PROCESS FOR OBTAINING IT
3983004 - PREPARATION OF A DIAGNOSTIC AGENT FOR MEASURING THE COAGULABILITY OF BLOOD
4007265 - METHOD FOR TREATING TETANUS TOXIN WITH A PROTEINASE TO PRODUCE AN ATOXIC IMMUNOGENIC PRODUCT
4011142 - PROCESS FOR MEASURING THE PLASMINOGEN CONTENT OF A SAMPLE
4217339 - GLYCOPROTEIN AND PROCESS FOR ISOLATING IT
4308204 - PROCESS FOR PREPARING THE THIRD COMPONENT OF THE COMPLEMENT FROM HUMAN BLOOD PLASMA

ORGANIZATIONAL PATENTING (1/69-12/81) - - ALPHA LISTING

BERNARD WOLNAK AND ASSOCIATES, INC.
4259443 - SYNTHESIS OF ASCORBIC ACID FROM LACTOSE

BIOCHEMIE GESELLSCHAFT M.B.H.
3737375 - PROCESS FOR THE PRODUCTION OF 6-AMINOPENICILLONIC ACID

BIODATA S.P.A.
4279999 - MEANS FOR ACCELERATING PRECIPITATION IN IMMUNOASSAY AND IMMUNOASSAY METHOD

BIORESEARCH LIMITED
3954726 - DOUBLE SALTS OF S-ADENOSIL-L-METHIONINE
4028183 - PROCESS OF PREPARING DOUBLE SALTS OF S-ADENOSYL-L-METHIONINE

BIOREX LABORATORIES LIMITED
4152212 - PROCESS FOR THE PURIFICATION OF GLUCURONOGLYCOSAMINOGLYCAN HYALURONATE LYASE

BJORKSTEN, JOHAN
3775254 - PURIFICATION OF LOW MOLECULAR WEIGHT ENZYMES

BOARD OF REGENTS FOR EDUCATION OF THE STATE OF RHODE ISLAND
4105800 - IMMOBILIZED ENZYME METHOD TO ASSESS FISH QUALITY

BOARD OF TRUSTEES OF THE LELAND STANFORD UNIVERSITY
3687808 - SYNTHETIC POLYNUCLEOTIDES

BOEHRINGER MANNHEIM G.M.B.H.
3509025 - METHOD AND AGENT FOR THE ENZYMATIC DETERMINATION OF GLUCOSE
3616231 - PROCESS FOR THE PRODUCTION OF URICASE
3639211 - PROCESS FOR THE PREPARATION OF CREATINE PHOSPHATE
3645851 - RECOVERY OF GLUCOSE OXIDASE
3677901 - PROCESS FOR THE PRODUCTION OF GLYCEROKINASE
3759793 - PROCESS FOR THE QUANTITATIVE DETERMINATION OF TRI-, DI- AND MONOGLYCERIDES
3794562 - PROCESS FOR THE ENRICHMENT OF PROTEINS USING POLYETHYLENE-IMINE
3806416 - CREATINE AMIDOHYDROLASE AND PROCESS FOR ITS PREPARATION
3806420 - PROCESS FOR THE PREPARATION OF CREATININE AMIDOHYDROLASE
3907644 - CREATININE AMIDOHYDROLASE COMPOSITION AND PROCESS FOR THE DETERMINATION OF CREATININE
3912588 - CREATINE AMIDOHYDROLASE IN THE CONVERSION OF CREATININE TO CREATINE
3925164 - METHOD FOR THE DETERMINATION OF CHOLESTEROL
3947377 - STABILIZED INDICATOR COMPOSITIONS CONTAINING 9-GAMMA-AMINOPROPYL)-3-AMINOCARBAZOLE
3948728 - STEROID-DELTA-ISOMERASE
3951744 - PURIFICATION OF DEHYDROGENASES
4008127 - PROCESS FOR THE PREPARATION OF CHOLESTEROL OXIDASE
4066508 - PROCESS AND REAGENT FOR DETERMINING TRIGLYCERIDES
4080262 - STABILIZING AGENT FOR ENZYMES
4118279 - STABILIZING AGENT FOR ENZYMES
4123384 - CONTROL SERUM CONTAINING ALKALINE PHOSPHATASE OF CONSTANT ACTIVITY
4144129 - CHOLESTEROLOXIDASE AND METHOD FOR ITS PRODUCTION FROM MICROORGANISMS
4186052 - NADH PEROXIDASE FOR HYDROGEN PEROXIDE DETERMINATION
4188465 - STABILIZED UREASE COMPOSITION
4237221 - PROCESS FOR OBTAINING MALTOSE PHOSPHORYLASE AND +62 -PHOSPHOGLUCOMUTASE AND METHOD OF DETERMINING +60 -AMYLASE USING SAM
E
4273870 - METHOD AND COMPOSITION FOR THE DETERMINATION OF GLYCEROL
4276376 - CREATINE KINASE CONTROL SERUM

BREWING PATENTS LIMITED
3896001 - MALTING PROCESSES

ORGANIZATIONAL PATENTING (1/69-12/81) - - ALPHA LISTING

BRISTOL-MYERS COMPANY
4053360 -

BURROUGHS WELLCOME CO.
3943451 - MICROORGANISM PORDUCTION
4097337 - BACTERIAL CULTURE MEDIUM
4219621 - STABILIZED THYMIDINE PHOSPHORYLASE PREPARATION AND CULTURE MEDIUM
4298685 - DIAGNOSTIC REAGENT

CALBIOCHEM-BEHRING CORP.
4228237 - METHODS FOR THE DETECTION AND DETERMINATION OF LIGANDS
4234680 - METHOD FOR TERMINATING A PEROXIDASE CATALYZED REACTION

CALBIOCHEM
3539450 - STABILIZATION OF ENZYMES
3703591 - TRIGLYCERIDE HYDROLYSIS AND ASSAY
3994783 - DIFFERENTIAL ASSAY OF CREATINE PHOSPHOKINASE ISOENZYMES

CALIFORNIA INSTITUTE OF TECHNOLOGY
4013507 - IONENE POLYMERS FOR SELECTIVELY INHIBITING THE VITRO GROWTH OF MALIGNANT CELLS

CANADA PACKERS LIMITED
3679548 - PROCESS FOR THE ENZYMIC UNHAIRING OF HIDES
4065355 - PURIFICATION OF DEOXYRIBONUCLEASE

CANADIAN PATENTS AND DEVELOPMENT LIMITED
3515641 - PROTEOLYTIC ENZYMES
3734831 - PRODUCTION OF CELLULASE
3862007 - EXTRACTION OF CHITINASE
3904481 - DETERMINATION OF NITROGENASE
4066753 - NEOMYCIN AND PAROMOMYCIN DERIVATIVES

CASE WESTERN RESERVE UNIVERSITY
3981983 - RAPID, RADIOCHEMICAL-LIGAND BINDING ASSAY FOR METHOTREXATE

CASTLE + COOKE INC.
3475277 - ION EXCHANGE TREATMENT OF BROMELAIN
3539451 - PRODUCTION OF REVERSIBLY INACTIVATED PAPAIN AND FICIN
3658651 - ION EXCHANGE TREATMENT OF BROMELAIN

CENTER FOR BLOOD RESEARCH, INC.
4303592 - AMIDINOPHENYLMETHYLSULFONYLFLUORIDE

CENTURY LABORATORIES INC.
3477910 - METHOD OF PRODUCTION OF UROKINASE
3477911 - METHOD OF PRODUCTION OF UROKINASE
3477912 - METHOD OF PRODUCTION OF UROKINASE
3477913 - METHOD OF PRODUCTION OF UROKINASE
3544427 - METHOD OF PRODUCTION OF UROKINASE

CESKOSLOVENSKA AKADEMIE VED
3983001 - ISOLATION OF BIOLOGICALLY ACTIVE COMPOUNDS BY AFFINITY CHROMATOGRAPHY

CETUS CORPORATION
4247641 - METHOD FOR PRODUCING EPOXIDES AND GLYCOLS FROM ALKENES

ORGANIZATIONAL PATENTING (1/69-12/81) - - ALPHA LISTING

CHEMBRO HOLDINGS (PROPRIETARY) LIMITED
4059490 - MEASUREMENT OF ALKALINE PHOSPHATASE LEVELS IN BODY FLUIDS

CHILDREN S HOSPITAL MEDICAL CENTER
4040908 - POLAROGRAPHIC ANALYSIS OF CHOLESTEROL AND OTHER MACROMOLECULAR SUBSTANCES

CHINOIN GYOGYSZER ES VEGYESZETI TERMEKEK GYARA RT.
3875003 - PROCESS FOR THE PREPARATION OF PROSTAGLANDIN

CHIYODA CHEMICAL ENGINEERING & CONSTRUCTION CO., LTD.
4275162 - PROCESS FOR THE PRODUCTION OF SPHINGOMYELINASE

CHOAY S.A.
3796631 - PROCESSES FOR PREPARING POLYNUCLEOTIDES
3886043 - PROCESS FOR PREPARING PURE PORCINE BETA-TRYPSIN
3926727 - UROKINASE PREPARATIONS
4029767 - PHARMACEUTICAL COMPOSITIONS OF STABLE UROKINASE-HEPARIN COMPLEXES AND METHODS FOR USE THEREOF
4106992 - PURIFICATION OF UROKINASE

CHUGAI SEIYAKU KABUSHIKI KAISHA
3658650 - CELL-WALL LYTIC ENZYME AND PROCESS FOR THE PRODUCTION THEREOF
3786141 - METHOD OF THE PRODUCTION OF ANTI-TUMOR SUBSTANCES
4067963 - SUBSTANCE ACTING TO PREVENT AND IMPROVE CEREBRAL FUNCTION DISORDER AND PROCESS FOR PREPARING THE SAME

CIBA-GEIGY CORPORATION
3844891 - FLOWABLE PANCREATIN PREPARATION OF LOW GERM CONTENT, AND A PROCESS FOR ITS MANUFACTURE
3923599 - PROCESS FOR PREPARING PLANT ENZYME PREPARATIONS OF LOW GERM CONTENT
3962036 - PROCESS FOR THE MANUFACTURE OF 7-AMINO-CEPHALOSPORANIC ACID-TYPE COMPOUNDS
4118515 - PREPARATION OF A STABLIZED PAPAIN SOLUTION

CITY OF HOPE NATIONAL MEDICAL CENTER
3448009 - STABILIZATION OF ENZYMES

COCA-COLA COMPANY
3736147 - PROCESS FOR PREPARING PROTEIN PRODUCTS

COLGATE-PALMOLIVE COMPANY
3687853 - GRANULATION PROCESS
3691015 - METHOD FOR PURIFYING ENZYMES
3773671 - PRODUCTION OF GRANULAR MIXTURES
3775331 - MANUFACTURE OF ENZYME SPHERES
4016040 - PREPARATION OF ENZYME-CONTAINING BEADS
4087368 - WATER-SOLUBLE ENZYME GRANULES
4115546 - ORAL COMPOSITIONS CONTAINING DEXTRANASE

COLONIAL SUGAR REFINING COMPANY LIMITED
3607647 - TREATMENT OF SUGAR SOLUTIONS
3875009 - BIOLOGICAL PRODUCTS

COMMERCIAL SOLVENTS CORPORATION
3696000 - PROCESS FOR THE PRODUCTION OF ALKALINE PROTEINASE

CONOCO, INC.
3769167 - CONCURRENT PRODUCTION OF A PLURALITY OF ENZYMES
4019959 - BACTERIAL PRODUCTION OF LIPASE AND PYOCYANINE FROM N-PARAFFINS

ORGANIZATIONAL PATENTING (1/69-12/81) - - ALPHA LISTING

CORNING GLASS WORKS
3868304 - METHOD OF MAKING FRUCTOSE WITH IMMOBILIZED GLUCOSE ISOMERASE
4002576 - ENZYME CARRIER REGENERATION
4282315 - PREPARATION OF ENRICHED WHOLE VIRUS RADIOLIGAND

CORN PRODUCTS COMPANY
3425910 - PRODUCTION OF CYCLODEXTRIN

COULTER ELECTRONICS INC.
4087331 - COLORIMETRIC METHOD FOR DETERMINING GAMMA-GLUTAMYL TRANSPEPTIDASE AND COMPOSITIONS USEFUL THEREIN
4242446 - METHOD FOR DETERMINING A SUBSTANCE IN A BIOLOGICAL FLUID AND REAGENT COMBINATION FOR USE IN THE METHOD

CPC INTERNATIONAL INC.
3549496 - PROCESS FOR MAKING HIGH MALTOSE SYRUP
3565765 - PREPARATION OF HIGH MALTOSE CONVERSION PRODUCTS
3619396 - ENZYMATIC PRODUCTION OF GLUCONIC ACID
3622463 - PRODUCTION OF EXTRACELLULAR GLUCOSE ISOMERASE BY STREPTOMYCES
3640847 - PROCEDURE FOR PRODUCTION OF ALPHA-CYCLODEXTRIN
3663372 - METHOD OF PREPARING A DRIED GLUCOAMYLASE PREPARATION
3681195 - METHOD OF TREATING YEAST
3770589 - PROCESS FOR THE PRODUCTION OF GLUCOSE ISOMERASE
3806419 - PREPARING PULLULANASE ENZYME
3813318 - PRODUCTION OF XYLOSE (DEXTROSE) ISOMERASE ENZYME PREPARATIONS
3826714 - THERMOPHILIC GLUCOSE ISOMERASE ENZYME PREPARATION
3849194 - LOW D.E. STARCH CONVERSION PRODUCTS
3860536 - ENZYME-DETERGENT COMBINATION
3910821 - ENZYMATIC ISOMERIZATION PRODUCT
3922196 - ENZYMATIC HYDROLYSIS OF GRANULAR STARCH
3922197 - PROCESS FOR CONVERTING GRANULAR STARCH TO DEXTROSE
3922198 - PROCESS FOR CONVERTING GRANULAR STARCH TO DEXTROSE
3922200 - ENZYMATIC HYDROLYSIS OF GRANULAR STARCH
3922201 - PREPARATION OF LEVULOSE FROM GRANULAR STARCH
3935070 - PRODUCTION OF SWEET SYRUP FROM DEXTROSE MOTHER LIQUOR
3941655 - METHOD FOR RECOVERING XYLOSE ISOMERASE
3956065 - INERT, NON-POROUS GRANULES FOR FLOW CONTROL IN A PLUG FLOW REACTOR
3957587 - PRODUCTION OF XYLOSE (DEXTROSE) ISOMERASE ENZYME PREPARATIONS
3960663 - PROCESS FOR THE CONTINUOUS ISOMERIZATION OF DEXTROSE
4040861 - PROCESS OF REFINING ENZYMATICALLY PRODUCED LEVULOSE SYRUPS
4113509 - ENZYMATICALLY PRODUCED MALTOSE-MALTOTRIOSE STARCH HYDROLYSATE
4169013 - PROCESS FOR PREPARING GLUCOAMYLASE
4202939 - GLUCOAMYLASE IMMOBILIZED ON CATIONIC COLLOIDAL SILICA
4235970 - PROTEASE INACTIVATED +60 -AMYLASE PREPARATIONS
4247637 - HIGHLY THERMOSTABLE GLUCOAMYLASE AND PROCESS FOR ITS PRODUCTION
4254225 - NOVEL NEUTRAL GLUCOAMYLASE AND METHOD FOR ITS PRODUCTION
4263400 - IMMOBILIZED ENZYMES
4276379 - PREPARATION OF HIGH FRUCTOSE SYRUPS FROM SUCROSE
4284722 - HEAT AND ACID-STABLE ALPHA-AMYLASE ENZYMES AND PROCESSES FOR PRODUCING THE SAME

CROWN ZELLERBACH CORPORATION
3558434 - STIMULATION OF THE GROWTH OF MICROORGANISMS

CUTTER LABORATORIES INC.
4229540 - HYDROLASE PURIFIED FROM HUMAN PLASMA

DAINIPPON PHARMACEUTICAL CO. LTD.
3923600 - PURIFICATION OF MICROORGANISM CELLS LYTIC ENZYME

ORGANIZATIONAL PATENTING (1/69-12/81) - - ALPHA LISTING.

DAINIPPON PHARMACEUTICAL CO. LTD. (CONTINUED)
3927200 - STABILIZATION OF MICROORGANISM CELLS LYTIC ENZYME
3929579 - DENTAL CARIES-INDUCING MICROORGANISM CELLS LYTIC ENZYME
3986930 - LIPASE ACTIVITY DETERMINING METHOD AND REAGENT

DAIWA KASEI KABUSHIKI KAISHA
4237230 - NOVEL LACTASE

DAWE S LABORATORIES, INC.
3701715 - METHOD FOR THE PRODUCTION OF GLUCOSE OXIDASE

DDS KROYER A/S
3910820 - METHOD OF MAKING STARCH HYDROLYSATES BY ENZYMATIC HYDROLYSIS

DENKI KAGAKU KOGYO KABUSHIKI KAISHA
4205128 - PROCESS FOR PRODUCING IMMOBILIZED ENZYME COMPOSITIONS

DEUTSCHE GOLD- UND SILBER-SCHEIDEANSTALT VORMALS ROESSLER
3597319 - PROCESS FOR THE PRODUCTION OF HELLEBRIGENIN
3956491 - MEDICINE CONTAINING THE MAIN SAPOGENIN OF HELLEBORUS
4004976 - PROCESS FOR RECOVERING THE MAIN SAPOGENINS FROM THE ROOTS OF RHIZOMES OF HELLEBORUS

DIAGNOSTIC DATA, INC.
4070459 - N-CARBAMYLATED ORGOTEIN

DIRECTOR OF NATIONAL FOOD RESEARCH INSTITUTE
3868303 - METHOD OF PRODUCING ENZYME AND ITS UTILIZATION THEREOF

DOW CHEMICAL COMPANY
3776693 - DRY CLEANING COMPOSITION AND PROCESS
4056442 - LIPASE COMPOSITION FOR GLYCEROL ESTER DETERMINATION
4246350 - PROTEIN IMMOBILIZATION ON CHELATING RESINS
4279994 - LIPASE DETERMINATION METHOD AND REAGENT
4308349 - ISOMERIZATION OF GLUCOSE TO FRUCTOSE USING GLUCOSE ISOMERASE FROM AMPULLARIELLA

DYNASCIENCES CORPORATION
4301245 - CHROMOGENIC METHOD OF DETECTING ENDOTOXINS IN BLOOD

EARLY WARNING COMPANY
3876504 - PROCEDURE FOR DETERMINATION OF ANTIGENS AND ANTIBODIES AND ARTICLES FOR USE THEREWITH

EASTMAN KODAK COMPANY
3515551 - PHOTOGRAPHIC PROCESSES AND ELEMENTS
3869349 - METHOD FOR THE ENZYMATIC HYDROLYSIS OF CHOLESTEROL ESTERS
3884764 - METHOD AND COMPOSITION FOR BLOOD SERUM CHOLESTEROL ANALYSIS
3909359 - METHOD FOR THE PREPARATION OF CHOLESTEROL OXIDASE
4035237 - METHOD FOR THE PREPARATION OF CHOLESTEROL OXIDASE
4042461 - METHOD FOR PURIFYING CHOLESTEROL ESTERASE
4052263 - PRODUCTION OF CHOLESTEROL ESTERASE USING <I NOCARDIA CHOLESTEROLICUM
4055469 - PURIFICATION OF MICROBIAL ENZYME EXTRACTS USING SYNTHETIC POLYELECTROLYTES
4062731 - PRODUCTION OF URICASE FROM MICROCOCCUS LUTEUS
4064010 - PURIFICATION OF URICASE
4072568 - METHOD FOR THE PREPARATION OF CHOLESTEROL OXIDASE
4093517 - METHOD FOR PRODUCING CHOLESTEROL OXIDASE IN THE PRESENCE OF A NONIONIC SURFACTANT
4166005 - PROCESS FOR THE PRODUCTION OF +60 -GLYCEROPHOSPHATE OXIDASE
4166763 - ANALYSIS OF LACTIC ACID OR LACTATE USING LACTATE OXIDASE

ORGANIZATIONAL PATENTING (1/69-12/81) - - ALPHA LISTING

EASTMAN KODAK COMPANY (CONTINUED)
4211844 - BILIRUBIN-SPECIFIC FUNGAL ENZYME PREPARATION
4269938 - ASSAY OF PEROXIDATIVELY ACTIVE MATERIALS
4275151 - HYDROLYSIS OF PROTEIN-BOUND CHOLESTEROL ESTERS
4275152 - HYDROLYSIS OF PROTEIN-BOUND CHOLESTEROL ESTERS
4275164 - PROCESS AND NUTRIENT MEDIUM FOR GROWING MICROORGANISM
4275166 - PROCESS FOR THE RECOVERY OF INTRACELLULAR ENZYME
4276377 - CREATININE IMINOHYDROLASE FREE FROM UREASE ACTIVITY
4283491 - ANALYTICAL ELEMENTS WITH IMPROVED REAGENT STABILITY

E-C APPARATUS CORPORATION
4013513 - ION EXCHANGE CHROMATOGRAPHIC ISOENZYME SEPARATION AND ISOLATION

ECONOMICS LABORATORY INC.
3773623 - SLIME CONTROL IN INDUSTRIAL WATERS
3824184 - SLIME CONTROL IN INDUSTRIAL WATERS

E. I. DU PONT DE NEMOURS AND COMPANY
3542662 - ENZYME ELECTRODE
3668074 - PROCESS FOR ISOLATION BY CRYSTALLIZATION OF THE MO-FE PROTEIN OF THE ENZYME NITROGENASE
3963578 - STABILIZATION OF PHOSPHOENOL PYRUVATE CARBOXYLASE
3974037 - PROCESS FOR MEASURING CARBON DIOXIDE CONTENT OF THE BODY FLUID
4039383 - PROCESS FOR PRODUCING MALTOPENTAOSE

EISAI CO., LTD.
3513074 - METHOD OF ACCELERATING THE CRYSTALLIZATION OF ALBUMEN LYSOZYME
3523871 - STABILIZATION OF CATALASE
3716454 - PROCESS FOR THE PRODUCTION OF ALPHA-AMINOBENZYLPHENICILLIN
3904479 - PROCESS FOR PREPARING PANCREATIC ELASTASE
4071410 - PROCESS FOR PREPARATION OF PANCREATIC ELASTASE

ELI LILLY AND COMPANY
3542647 - METHOD FOR PRODUCING L-ASPARAGINASE
3594281 - CRYSTALLINE COMBINATION OF L-ASPARAGINASE AND A METAL OR METALLOID AND METHOD OF ITS MANUFACTURE
3904480 - ENHANCED PRODUCTION OF PLASMINOGEN ACTIVATOR
3972774 - ENZYMATIC DE-ESTERIFICATION OF CEPHALOSPORIN PARA-NITROBENZYL ESTERS

ENZYMIC MALT COMPANY LIMITED, THE AND
3485720 - MALTING OF BARLEY OR OTHER CEREALS
3619373 - PROCESS FOR MALTING GERMINATED GRAIN

E. R. SQUIBB + SONS, INC.
3446705 - METHOD FOR THE PRODUCTION OF 6-AMINO-PENICILLANIC ACID
3462487 - CHEMICAL COMPOUNDS AND METHODS FOR PREPARING THE SAME
3463791 - 7-CHLORO-4-DEDIMETHYLAMINO-12,12ALPHA-SECOTETRACYCLINE- 12-OIC ACID-6,12-LACTONES
3493465 - PROCESS FOR HALOGENATING 15-KETOTOLOLACTONES
3511754 - PROCESS FOR ISOLATING L-ASPARAGINASE
3511755 - SYNTHESIS OF L-ASPARAGINASE
3517036 - HYDROXY, ACYLOXY AND 11-KETO-1,3,5(10),7- ESTRATETRAENES
3528887 - SYNTHESIS OF L-ASPARAGINASE
3576719 - ALKALINE PROTEINASE
3646218 - PENICILLIC ACID DERIVATIVES AND RELATED COMPOUNDS AND METHOD OF PRODUCING THEM
3734830 - CONTINUOUS PROCESS FOR PREPARING DELTA-DEHYDROGENASE
3817835 - PROCESS FOR THE PRODUCTION OF ANTIMICROBIAL AGENTS
4205068 - +62 -LACTAMASE INHIBITOR EM4615

ENZYMES PER SE

ORGANIZATIONAL PATENTING (1/69-12/81) - - ALPHA LISTING

ETABLISSEMENT PUBLIC DET" AGENCE NATIONALE DE VALORISATION D
4029819 - SUPEROXIDE DISMUTASE AND ITS APPLICATION AS AN OXIDATION INHIBITOR

ETHYL CORPORATION
4262092 - PROCESS FOR PRODUCING N-ACYL-D-PHENYLALANINE ESTER

EXXON RESEARCH + ENGINEERING CO.
3616222 - PROCESS FOR SACCHARIFICATION OF CELLULOSIC AND WOODY TISSUES BY FUNGI OR ENZYMES FROM FUNGI
3897308 - IMMOBILIZED ENZYMES AND METHOD FOR PREPARATION
4250259 - MICROBIOLOGICAL PRODUCTION OF KETONES FROM C/3\ -C/6 \ SECONDARY ALCOHOLS
4266034 - METHOD FOR PRODUCING MICROBIAL CELLS AND USE THEREOF TO PRODUCE OXIDATION PRODUCTS
4268630 - MICROBIOLOGICAL PRODUCTION OF KETONES FROM C/3\ -C/6 \ ALKANES
4269940 - MICROBIOLOGICAL ALKANE OXIDATION PROCESS

FABRICA DE ANTIBIOTICE IASI
3798127 - MEDIUM FOR THE CULTURE OF THE ESCHERICHIA COLT STRAIN

FMC CORPORATION
3666399 - ENZYMATIC PEROXYDIPHOSPHATE HYDROLYSIS

FORSCHUNGSINSTITUT FUR DIE GARUNGSINDUSTRIE
3616235 - PROCESS FOR PRECIPITATING ENZYMES AND ENZYMATIC INACTIVE PROTEINS IN SOLUTION WITH SYNTHETIC TANNING MATERIALS

FORSYTH DENTAL INFIRMARY FOR CHILDREN
4250262 - METHOD OF PREPARING A PURIFIED GLUCOSYLTRANSFERASE

FUJI OIL COMPANY, LIMITED
4024000 - STABILIZATION OF BETA-AMYLASE IN AQUEOUS MEDIUM

FUJI PHOTO FILM CO., LTD
3746621 - PREPARATION OF ENZYME-CONTAINING MICROCAPSULE

FUJISAWA PHARMACEUTICAL CO., LTD.
4258134 - NOVEL HYALURONIDASE BMP-8231 AND PRODUCTION THEREOF

GATES RUBBER COMPANY
3808102 - PROCESS FOR PREPARING ALPHA AMYLASE

GB FERMENTATION INDUSTRIES, INC.
4065580 - LIPOLYTIC ENZYME FLAVORING SYSTEM
4086139 - DIFFERENTIAL INACTIVATION OF AMYLASE IN AMYLASE-PROTEASE MIXTURES
4101379 - ENZYME COMPLEX HYDROLYZING BACTERIAL MUCUS
4136201 - MICROBIAL RENNIN

G. D. SEARLE & CO.
3776900 - STABILIZATION OF REDUCED COENZYMES
3838010 - PHOTOMETRIC METHOD FOR DETERMINING LACTIC ACID DEHYDROGENASE OR GLUCOSE-6-PHOSPHATE DEHYDROGENASE
3935185 - POLYNUCLEOTIDES OF POLY(5-HYDROXYCYTIDYLIC ACIDS)
3947324 - METHOD FOR ISOLATING HIGH PURITY PEROXIDASE

GENERAL ELECTRIC COMPANY
3812013 - SOLUBLE CELLULASE ENZYME PRODUCTION
4094742 - PRODUCTION OF ETHANOL FROM CELLULOSE USING A THERMOPHILIC MIXED CULTURE

GENERAL FOODS CORPORATION
3565764 - SUGAR PRODUCTION FROM AMYLACEOUS MATERIALS

ORGANIZATIONAL PATENTING (1/69-12/81) - - ALPHA LISTING

GESELLSCHAFT FUR BIOTECHNOLOGISCHE FORSCHUNG MBH
4064011 - PROCESS FOR PRODUCING ECORI RESTRICTION ENDONUCLEASE WITH <I E.COLI <B MUTANTS
4144130 - PROCESS FOR THE SEPARATION OF ENZYMES

GIST-BROCADES N.V.
3838007 - WATER-INSOLUBLE ENZYME COMPOSITION
3855064 - PREPARATION OF A PROTEOLYTIC ENZYME
3912593 - WATER-INSOLUBLE NITROGEN-CONTAINING BIOLOGICALLY ACTIVE ORGANIC SUBSTANCES
4002572 - ALKALINE PROTEASE PRODUCED BY A BACILLUS
4242219 - NOVEL ENZYME PARTICLES AND THEIR PREPARATION

GIVAUDAN CORPORATION
4137126 - PROCESS FOR PREPARING GLUCOSE ISOMERASE USING STREPTOMYCES GLAUCESCENS MUTANTS
4201857 - NOVEL CONDENSATION PRODUCTS HAVING HIGH ACTIVITY TO INSOLUBILIZE PROTEINS AND PROTEIN-INSOLUBILIZED PRODUCTS

GLAXO LABORATORIES LIMITED
3436310 - HYDROLYSIS OF THE ACETOXYMETHYL GROUP AT THE 3- POSITION OF THE CEPHALOSPORIN NUCLEUS
3658649 - CEPHALOSPORIN DERIVATIVES
3697378 - DEXTRINIZATION OF STARCH WITH X-AMYLASE FROM BACILLUS COAGULANS
3801458 - PROCESS FOR PREPARING CEPHALOSPORIN DERIVATIVES
3880713 - CEPHALOSPORIN COMPOUNDS
3880742 - BETA-1,4,/BETA1,3 GLUCANASE
3976546 - CEPHALOSPORINS
4011136 - BIOCHEMICAL PROCESS
4075061 - METHOD FOR PRODUCING CEPHALOSPORINS
4164447 - O-TRANSCARBAMOYLASE

GODO SHUSEI KABUSHIKI KAISHA
3661594 - PRODUCTION OF BACTERIAL RENNET FOR MAKING CHEESE
3930954 - NEUTRAL PROTEASE USEFUL FOR ANIMAL TISSUE AND CELL CULTURE
3948725 - NEUTRAL PROTEASE USEFUL FOR ANIMAL TISSUE AND CELL CULTURE

GRAY INDUSTRIES, INC.
3645849 - STABILITY OF ENZYMES

GREAT WESTERN SUGAR COMPANY
4097333 - ENZYMATIC METHOD OF PRODUCING GLUCOSE FROM ETHYLENE TREATED CELLULOSE
4241185 - METHOD OF STABILIZING +60 -GALACTOSIDASE

GREEN CROSS CORPORATION
3542646 - PROCESS FOR FRACTIONALLY OBTAINING UROKINASE AND BLOOD COAGULATION ACCELERATOR IN HUMAN URINE
3627642 - LYSOZYME SALTS
3945889 - PREPARATION OF HUMAN PLACENTAL HYALURONIDASE
4010074 - METHOD FOR PURIFICATION AND RECOVERY OF UROKINASE
4104125 - PROCESS FOR PRODUCING HUMAN LYSOZYME
4286063 - METHOD FOR PRODUCING THROMBOLYTIC PREPARATION
4306025 - METHOD FOR RECOVERING MYELOPEROXIDASE AND PHARMACEUTICAL COMPOSITION CONTAINING MYELOPEROXIDASE AS MAJOR CONSTITUENT

HAYASHIBARA BIOCHEMICAL LABORATORIES INCORPORATED
3812011 - METHOD OF CONVERTING STARCH TO BETA-CYCLODEXTRIN
3832285 - METHOD OF PRODUCING MALTOSE OF HIGH PURITY
3988206 - HEAT STABLE CYCLODEXTRIN GLYCOSYLTRANSFERASE
4028186 - PROCESS FOR THE PRODUCTION OF SACCHARIFIED STARCH PRODUCTS

HAYASHIBARA COMPANY
3492203 - EXTRACTION OF BETA-AMYLASE FROM WHEAT BRAN

ORGANIZATIONAL PATENTING (1/69-12/81) - - ALPHA LISTING

HAYASHIBARA COMPANY (CONTINUED)

3560345 - PROCESS FOR PRODUCING BACTERIAL ISOAMYLASE
3622460 - PROCESS FOR PRODUCING A LARGE AMOUNT OF ISOAMYLASE
3632475 - PROCESS FOR PREPARING LONG-CHAIN AND SHORT-CHAIN AMYLOSES FROM STARCHES
3677896 - PROCESS FOR PREPARING CRYSTALLINE MALTOSE
3691013 - PROCESS FOR PRODUCING KETOSE
3692580 - PROCESS FOR THE PRODUCTION OF STARCH SYRUPS
3701714 - PROCESSES FOR THE PRODUCTION OF OLIGOSACCHARIDE HAVING FRUCTOSE MOLECULES ON THEIR REDUCING ENDS
3716455 - METHOD FOR PRODUCING ISOAMYLASE BY FERMENTATION
3721605 - PROCESS FOR PRODUCING AMYLOSE IN INDUSTRIAL SCALE
3723253 - PRODUCTION OF ALPHA-1,6-GLUCOSIDASE
3729380 - PROCESS FOR PRODUCING LOW MOLECULAR AMYLOSE ON A COMMERCIAL BASIS
3730840 - PROCESS FOR PREPARING LOW MOLECULAR WEIGHT AMYLOSES
3741873 - METHOD FOR THE STABILIZATION OF ALPHA-1,6-GLUCOSIDASES
3766014 - PRODUCTION OF ALPHA-1,6-GLUCOSIDASES
3769168 - PROCESS FOR THE PURIFICATION OF AMYLASES
3795584 - PROCESS FOR PRODUCING HIGH PURITY MALTOSE
3801461 - PROCESS FOR THE EXTRACTION OF ENZYMES FROM MICROORGANISMS
3801462 - PRODUCTION OF BETA-AMYLASE
3804715 - PROCESS FOR PREPARING SUGAR CONTAINING MALTOSE OF HIGH PURITY
3804718 - METHOD OF PRODUCING BETA-AMYLASE BY BACTERIAL FERMENTATION
3827940 - PREPARATION OF ALPHA-1,6-GLUCOSIDASE
3838006 - PROCESS FOR PRODUCING HEAT-RESISTANT STARCH SYRUPS
3870704 - NITROGEN CONTAINING AMYLOSE DERIVATIVES
3888738 - METHOD FOR PURIFYING CYCLODEXTRIN-PRODUCING ENZYMES
4001435 - PROCESS FOR PREPARING FOODS AND DRINKS

HAZLETON LABORATORIES, INCORPORATED
3575811 - METHOD FOR THE DETECTION OF CANCER

HENKEL + CIE G.M.B.H.
4016039 - PROCESS FOR THE RECOVERY OF PROTEINS FROM AQUEOUS SOLUTIONS OF PROTEINS

HENKEL KOMMANDITGESELLSCHAFT AUF AKTIEN(HENKEL KGAA)
4062732 - PROCESS OF PRODUCING ACID STABLE PROTEASE
4142999 - STABILIZED LIQUID ENZYME CONTAINING COMPOSITIONS

HITACHI CHEMICAL COMPANY, LTD.
4025390 - METHOD FOR RECOVERING UROKINASE FROM A UROKINASE-CONTAINING SOLUTION
4048014 - METHOD FOR OBTAINING UROKINASE

HOECHST AKTIENGESELLSCHAFT
3490995 - PROCESS FOR THE BIOSYNTHESIS OF CELL- BOUND PULLULANASE BY AEROBACTER AEROGENES
3511753 - PROCESS FOR PREPARING A LIPOLYTIC ENZYME

HOFFMANN-LA ROCHE INC.
3755086 - DIAGNOSTIC METHOD UTILIZING SYNTHETIC DEOXYRILIONUCLEOTIDE OLIGOMER TEMPLATE
3883508 - PROCESS FOR THE PREPARATION OF GUANOSINE TETRA- AND PENTA-PHOSPHATES AND PRODUCTS

HOKKAIDO SUGAR COMPANY, LTD.
3664927 - APPARATUS FOR CONTINUOUS HYDROLYSIS OF RAFFINOSE
3836432 - CONTINUOUS PROCESS FOR THE HYDROLYSIS OF RAFFINOSE
3867256 - METHOD FOR PRODUCTION OF ALPHA-GALACTOSIDASE BY MICROORGANISM
3894913 - METHOD FOR PRODUCTION OF ALPHA-GALACTOSIDASE
3957578 - METHOD FOR MANUFACTURE OF ALPHA-GALACTOSIDASE BY MICROORGANISM
3972777 - METHOD FOR RECOVERY OF REFINED ALPHA-GALACTOSIDASE

ORGANIZATIONAL PATENTING (1/69-12/81) - - ALPHA LISTING

HONEYWELL INC.
3941659 - BLOOD ALCOHOL ANALYZER

HOYASHIBARA BIOCHEMICAL LABORATORIES, INCORPORATED
3806421 - AMYLASE INHIBITOR AND METHOD OF PRODUCING THE SAME

HYCEL, INC.
4229369 - TRIS (HYDROXYMETHYL) AMINOMETHANE SALT OF 2-MERCAPTOSUCCINIC ACID

ICN PHARMACEUTICALS INC.
3976545 - 1,2,4-TRIAZOL E-3-CARBOXAMIDES AS ANTIVIRAL AGENTS

IDEMITSU KOSAN COMPANY LIMITED
3983008 - METHOD OF EXTRACTING USEFUL COMPONENTS FROM MICROBIAL CELLS

IMPERIAL CHEMICAL INDUSTRIES LIMITED
3713981 - ENZYMES FROM ARMILLARIA MELLEA
3892629 - PROCESS FOR GROWING A FUNGUS
3903069 - POLYPEPTIDES OBTAINED BY MODIFICATION OF PORCINE OR BOVINE INSULIN
4032633 - POLYPEPTIDES
4035485 - POLYPEPTIDES
4053361 - PROCESS FOR THE PREPARATION OF GLUCOSE ISOMERASE USING CURTOBACTERIUM
4059489 - PRODUCTION OF GLUCOSE ISOMERASE
4069104 - CONVERSION OF ALDOSE TO KETOSE IN THE PRESENCE OF OXYANIONS OR MIXED OXYANIONS OF TIN OR GERMANIUM
4183787 - CIRCULATION OF GAS/LIQUID MIXTURES
4234687 - +62 -GALACTOSIDASE

INOLEX CORPORATION
3796636 - PROCESS FOR PREPARING HIGH ACTIVITY PEPSIN

INSTITUT FRANCAIS DU PETROLE
3772152 - PROCESS FOR MANUFACTURING ENZYMES FROM HYDROCARBONS

INSTITUT NATIONAL DE LA SANTE ET DE LA RECHERCHE MEDICALE
4298686 - METHOD OF IMMUNOENZYMATIC ASSAY UTILIZING +66 /5\ ,3+L -KETO-STEROID ISOMERASE

INSTITUTO DE FARMACOLOGIA ESPANOLA, S.L. (FUNDACION MARQUES
4038419 - ENZYMATIC CLARIFICATION OF LIQUIDS

INTERNATIONAL TELEPHONE AND TELEGRAPH CORPORATION
4299848 - MODIFIED ENZYME SYSTEM TO INHIBIT BREAD FIRMING METHOD FOR PREPARING SAME AND USE OF SAME IN BREAD AND OTHER BAKERY PROD
UCTS

IOWA STATE UNIVERSITY RESEARCH FOUNDATION INC.
4228150 - METHOD OF INHIBITING DEXTRANSUCRASE AND ORAL COMPOSITIONS FOR USE THEREIN

ISTITUTO SIEROTERAPICO E VACCINOGENO TOSCANO SCLAVO S.P.A.
4220714 - COMPOSITION FOR INHIBITING ADENYLATE-KINASE AND ITS USE

J. K. AND SUSIE L. WADLEY RESEARCH INSTITUTE AND BLOOD BANK
3597323 - METHOD OF PURIFYING L-ASPARAGINASE
3616230 - METHOD FOR PRODUCTION OF L-ASPARAGINASE
3637462 - PURIFICATION OF ENZYMES

JOSEPH E. SEAGRAM SONS, INC.
3988204 - PRODUCTION OF GLUCOAMYLASE FOR CONVERSION OF GRAIN MASHES IN THE PRODUCTION OF GRAIN SPIRITS

ORGANIZATIONAL PATENTING (1/69-12/81) - - ALPHA LISTING

J. P. SIMPSON AND CO. (ALNWICK) LIMITED
4277505 - PROCESS FOR THE MALTING OF GRAIN

KABUSHIKI KAISHA HAYASHIBARA SEIBUTSU KAGAKU KENKYUJO
4254227 - PROCESSES FOR PRODUCING SYRUPS OF SYRUP SOLIDS CONTAINING FRUCTOSE-TERMINATED OLIGOSACCHARIDES

KABUSHIKI-KAISHA HAYASHIBARA SELBUTSUKAGAKU KENKYUJO
4032403 - PROCESS FOR THE PRODUCTION OF SACCHARIFIED STARCH PRODUCTS WHEREIN MALTOSE IS THE PREDOMINANT CONSTITUENT

KALI-CHEMIE PHARMA GMBH
4019958 - CONTINUOUS PROCESS OF PRODUCING PANCREATIN AND PRODUCT THEREOF

KAYASHIBARA COMPANY
3703440 - PROCESS FOR THE PRODUCTION OF STARCH SYRUPS THAT HAVE FRUCTOSE ON THEIR MOLECULAR ENDS

KEEVER COMPANY
3498882 - METHOD OF MAKING A ZINC LIPASE COMPLEX

KEN HAYASHIBARA
3819484 - PROCESS FOR PREPARING SUCROSE-STARCH SWEETENER FREE FROM REDUCING SUGAR

KERNFORSCHUNGSANLAGE JULICH GMBH
4250261 - PROCESS FOR THE MICROBIAL PRODUCTION OF ALCOHOLOXIDASE

KETTERING, CHARLES F., FOUNDATION
3560344 - REDUCTION OF GASEOUS NITROGEN TO AMMONIA

KETTERING SCIENTIFIC RESEARCH INC.
3423289 - REDUCTION OF GASEOUS NITROGEN TO AMMONIA

KIKKOMAN SHOYU CO., LTD.
3619372 - ACID RESISTANT LIPASE AND PROCESS FOR PREPARATION THEREOF
3645850 - PREPARATION OF ACID CARBOXYPEPTIDASE
3674644 - PRODUCTION OF NOVEL ACIDSTABLE AND THERMOSTABLE PROTEASE
3713983 - METHOD FOR PREPARING A THERMOSTABLE AND ALKALI-STABLE PROTEASE
3717470 - HYDROLYSIS OF GLUTAMINE WITHIN FOODS AND BEVERAGES TO GLUTAMIC ACID
3721606 - GLUTAMINASE GA
3796633 - PEPTIDOGLUTAMINASE
3816260 - BACTERIAL CELLWALL LYTIC ENZYME AND PROCESS FOR PRODUCING THE SAME
3897570 - PREPARATION OF AN ACIDIC BEVERAGE
3926725 - PROCESS FOR PRODUCING CYCLIC-3,5-CYTIDYLIC ACID BY FERMENTATION
4061540 - CHOLESTEROL OXIDAZE AND PROCESS FOR PREPARING SAME
4200694 - NOVEL PECTIN ESTERASE, PROCESS FOR ITS PRODUCTION, AND PROCESS FOR PRODUCING DEMETHOXYLATED PECTIN BY THE USE OF SAID PE CTIN ESTERASE
4247632 - METHYLGUANIDINE-DECOMPOSING ENZYME AND PROCESS FOR ITS PRODUCTION

KIRIN BEER KABUSHIKI KAISHA
3716452 - LYSIS OF YEAST CELL WALLS
3917510 - LYSIS OF YEAST CELL WALLS

KOCH-LIGHT LABORATORIES LIMITED
4043869 - WATER INSOLUBLE BIOLOGICALLY ACTIVE MATERIAL

KONINKLIJKE NEDERLANDSCHE GISTEN-EN SPIRITUSFABRIEK N.V.
3801463 - PREPARATION OF ENZYMES IN PARTICULATE FORM

ORGANIZATIONAL PATENTING (1/69-12/81) - - ALPHA LISTING

KUMIAI CHEMICAL INDUSTRY CO., LTD.
3890198 - CELL WALL-LYSING COMPLEX ENZYMES AND A PROCESS FOR THE PRODUCTION THEREOF
3969189 - CELL WALL-LYSING COMPLEX ENZYMES AND A PROCESS FOR THE PRODUCTION THEREOF
4032663 - PROCESS FOR USING CELL WALL-LYSING ENZYMES
4229539 - +62 -GALACTOSIDASE AND PRODUCTION THEREOF

KURTH MALTING CORPORATION
3759792 - METHOD OF MALTING
4251630 - PREPARATION OF MALT HIGH IN ALPHA-1,6-HYDROLASE

KYOWA HAKKO KOGYO CO., LTD
3579427 - PROCESS FOR PRODUCING METHIONINE DECARBOXYLASE
3594282 - PROCESS FOR PURIFYING L-ASPARAGINASE
3607654 - PROCESS FOR PRODUCING PURIFIED L-ASPARAGINASE
3607655 - PROCESS FOR PRODUCING MILK CLOTTING ENZYME
3620925 - PROCESS FOR PURIFYING L-ASPARAGINASE
3627639 - PROCESS FOR PRODUCING L-ASPARAGINASE
3655514 - PROCESS FOR PURIFYING L-ASPARAGINASE
3669842 - PURIFICATION OF L-ASPARAGINASE
3677899 - PROCESS FOR PRODUCING CELLULASE
3682777 - PROCESS FOR PRODUCING PENICILLIN DERIVATIVES
3682778 - PRODUCTION OF MICROBIAL CELL-LYTIC ENZYMES
3692632 - PROCESS FOR PRODUCING LIPASE
3694316 - PROCESS FOR PREPARING PROTEASE BY MICROORGANISM OF THE BASIDIOMYCETES
3717548 - METHOD FOR PREPARING AMINOCYCLOHEXYLPENICILLIN
3776816 - PROCESS FOR PRODUCING STEROID DEHYDROGENASE
3787288 - METHOD FOR PREPARING ALPHA-AMINOBENZYLPENICILLIN
3819481 - PROCESS FOR PREPARING NICOTINAMIDE ADENINE DINUCLEOTIDE PHOSPHATE
3827936 - PROCESS FOR PREPARING CYCLIC ADENOSINE MONOPHOSPHATE
3838009 - PROCESS FOR PRODUCING DETERGENT RESISTING ALKALINE PROTEASE
3878191 - PROCESS FOR PREPARING SOLUBLE FLAVONOID GLYCOSIDES
4011138 - PROCESS FOR THE PREPARATION OF CHOLESTEROL ESTERASE
4087329 - CREATININE DESIMIDASE AND ITS METHOD OF PRODUCTION
4134793 - CREATININE DESIMIDASE IN THE QUANTITATIVE DETERMINATION OF CREATININE
4202941 - GLYCEROL OXIDASE AND PROCESS FOR THE PRODUCTION THEREOF AND METHOD FOR THE QUANTITATIVE DETERMINATION OF GLYCEROL BY GLY CEROL OXIDASE
4245050 - PROCESS FOR THE PREPARATION OF CHOLINE OXIDASE BY FERMENTATION
4255519 - GLYCEROL OXIDASE AND PROCESS FOR THE PRODUCTION THEREOF
4273874 - ACIDIC URICASE AND PROCESS FOR PRODUCTION THEREOF

LABATT, JOHN LIMITED
3482997 - MAKING CHEESE USING A MODIFIED BACTERIAL ENZYME COMPLEX FROM THE GENUS BACILLUS
3507750 - PROCESS FOR PREPARING MILK COAGULATING ENZYME COMPLEX

LEAF PROTEINS, INC.
4268632 - PROCESS FOR ISOLATION OF RIBULOSE 1,5-DIPHOSPHATE CARBOXYLASE FROM PLANT LEAVES

LEHIGH UNIVERSITY
3677900 - METHOD OF PRODUCING COLLAGENASE WITH A SPECIES OF VIBRIO

LES PRODUITS ORGANIQUES DU SANTERRE ORSAN
3933586 - METHOD OF MAKING L-ASPARTIC ACID FROM FUMARIC ACID

LEVER BROTHERS COMPANY
3652397 - PREPARATION OF PHOSPHATIDES
3663371 - METHOD OF PRODUCING DEXTRANASE

ENZYMES PER SE

ORGANIZATIONAL PATENTING (1/69-12/81) - - ALPHA LISTING

(CONTINUED)

LEVER BROTHERS COMPANY
3723327 - GRANULAR PROTEOLYTIC ENZYME COMPOSITION
3748233 - ALKALINE PROTEASE, METHOD FOR ITS PRODUCTION, AND DETERGENT COMPOSITION
3784476 - DETERGENT COMPOSITION
4009076 - ENZYME GRANULES
4016041 - PROCESS OF MAKING GRANULAR ENZYMES OF REDUCED STICKINESS
4261868 - STABILIZED ENZYMATIC LIQUID DETERGENT COMPOSITION CONTAINING A POLYALKANOLAMINE AND A BORON COMPOUND

LIFELINE PRODUCTS, INC.
4211842 - STARCH-DEGRADING BENZYMES DERIVED FROM +I CLACOSPORIUM RESINAE

LKB-PRODUKTER AB
4235961 - METHOD FOR PHOTOMETRIC DETERMINATION OF THE SUBUNIT B OF CREATINE KINASE AND A REAGENT FOR CARRYING OUT THE METHOD
4246340 - METHOD AND REAGENT FOR BIOLUMINISCENCE

LOUISIANA STATE UNIVERSITY FOUNDATION
4062727 - PROCESS FOR MANUFACTURING HIGH DENSITY CELL CULTURES

LYCKEBY STARKELSEFORADLING AB
3651221 - SUGAR SUBSTITUTE ADDITIVE PREPARATIONS OF SORBITOL AND GLUCONIC ACID

MALLINCKRODT, INC.
3950133 - REAGENT FORMULATIONS FOR ASSAYING BIOLOGICAL SPECIMENS AND METHODS OF PREPARING AND USING SAME

MARUKIN SHOYU COMPANY, LIMITED
3725201 - MANUFACTURE OF URIDINE-5-DIPHOSPHOGLUCURONIC ACID

MASSACHUSETTS GENERAL HOSPITAL
4205129 - METHOD FOR PURIFYING GALACTOSYLTRANSFERASE ISOENZYMES AND PRODUCT
4261976 - METHOD AND GLYCOPROTEIN COMPOSITION FOR INHIBITION OF GROWTH OF TRANSFORMED CELLS AND TUMORS

MASSACHUSETTS INSTITUTE OF TECHNOLOGY
4066510 - ASSAY FOR MUTAGENESIS IN DIPLOID HUMAN LYMPHOBLASTS

MAX-PLANCK-GESELLSCHAFT ZUR FORDERUNG DER WISSENSCHAFTEN E.V
3791928 - PURIFICATION OF THYMIDINE KINASE
3810822 - PROCESS FOR OBTAINING A PHOSPHODIESTERASE FROM DICTYOSTELIUM DISCOIDEUM

MAYASHIBARA COMPANY
3669835 - PROCESS FOR PREPARING VITAMIN B/2\ GLUCOSIDE

MEAD JOHNSON + COMPANY
3594284 - LYSOSTAPHIN FERMENTATION WITH ACCELERATED TIME CYCLE

MEDICO ELECTRONIC INC.
3899397 - GLUTAMIC OXALACETIC TRANSMINASE ASSAY METHOD

MEIJI SEIKA KAISHA LTD.
3492204 - PROCESS FOR THE PRODUCTION OF ACID PROTEASE BY CULTIVATION OF MICROORGANISMS
3868464 - PRODUCTION OF MALTOSE WITH AMYLASES PRODUCED BY STREPTOMYCES
3905869 - BACILLOPEPTIDASE C, A NEW ALKALINE PROTEASE AND ITS PRODUCTION BY CULTIVATING BACILLUS BACTERIA
3975235 - PROCESS FOR THE PRODUCTION OF CEPHAMYCIN TYPE ANTIBIOTIC SUBSTANCES
3998696 - METHOD FOR PRODUCING MALTOSE

MEITO SANGYO KABUSHIKI KAISHA
3950221 - PROCESS FOR IMPROVING THE QUALITY OF MICROBIAL RENNET

ORGANIZATIONAL PATENTING (1/69-12/81) - - ALPHA LISTING

MEITO SANGYO KABUSHIKI KAISHA (CONTINUED)
4283494 - MICROBIAL LIPASE, PROCESS FOR ITS PREPARATION AND MICROBIOLOGICALLY PURE CULTURE THEREFOR

MERCK + CO., INC.
3623949 - PROCESS FOR THE PREPARATION OF 1-CHLORO-2- HYDROXYPROPYLPHOSPHONIC ACID
3652401 - PURIFICATION OF DEXTRANASE USING IRON SALTS
3664926 - CRYSTALLIZATION OF L-ASPARAGINASE
3716551 - DEUTERATED L-AMINO ACID MIXTURE
3719562 - PRODUCTION OF POLYNUCLEOTIDE PHOSPHORYLASE
3897309 - PROCESS FOR REMOVING PYROGENIC MATERIAL FROM AQUEOUS SOLUTIONS
4017360 - METHOD FOR PURIFYING HEPATITIS B ANTIGEN
4135978 - PRODUCTION OF N-ACYL-THIENAMYCINS
4264734 - PROCESS FOR PRODUCING ANTIBIOTIC DESACETYL 890A/10
4282322 - PROCESS FOR ENZYMATIC DEACYLATION OF ANTIBIOTICS

MERCK E., A.G.
3591457 - ENZYMATIC DECOMPOSITION OF GLUCANS

MERCK PATENT GESELLSCHAFT MIT BESCHRANKTER HAFTUNG
4067775 - PROCESS AND COMPOSITION FOR DETERMINING THE ACTIVITY OF CREATINEKINASE-MB

MICHAEL REESE RESEARCH FOUNDATION
4082612 - PLASMINOGEN ACTIVATOR COMPLEX

MIDWEST BIOCHEMICAL CORPORATION
4006056 - CONTROLLED RELEASE COMPOSITION CONTAINING STABILIZED UREASE

MIEJR SEIKA KAISHA, LTD.
3804717 - PRODUCTION OF NEW AMYLASES BY CULTIVATION OF STREPTOMYCES AND USES OF THESE NEW AMYLASES

MILES LABORATORIES INC.
3424654 - RECOVERY OF MICROCOCCAL NUCLEASE
3483084 - AMYLOGLUCOSIDASE PURIFICATION
3483085 - REMOVAL OF TRANSGLUCOSIDASE FROM AMYLOGLUCOSIDASE
3483090 - PROCESS FOR PURIFYING AMYLOGLUCOSIDASE
3549390 - MILK-CLOTTING ENZYME PRODUCT AND PROCESS THEREFOR
3592739 - PURIFICATION OF LACTASE
3625828 - PROCESS FOR PRODUCTION OF GLUCOSE ISOMERASE
3634195 - PRODUCTION OF LIPASE
3655513 - PURIFICATION OF PROTEASE
3661716 - PROCESS FOR SIMULTANEOUS FRACTIONATION AND PURIFICATION OF PROTEASE AND RIBONUCLEASE OF RHIZOPUS MOLD
3728224 - ENZYME PURIFICATION PROCESS
3737377 - PURIFICATION OF LACTASE
3792039 - POLY 2'-FLUORO-2'-DEOXYURIDYLIC ACID
3917513 - REMOVAL OF TRANSGLUCOSIDASE FROM AMYLOGLUCOSIDASE
3962037 - COMPOSITION FOR STABILIZING AN ENZYME-CONTAINING REAGENT
3974036 - PROCESS FOR CONDITIONING BACTERIAL CELLS CONTAINING GLUCOSE ISOMERASE ACTIVITY
4003792 - CONJUGATES OF ACID POLYSACCHARIDES AND COMPLEX ORGANIC SUBSTANCES
4061541 - PREPARATION OF ALKALINE ALPHA-AMYLASE
4070242 - METHOD FOR THE PREPARATION OF PROSTAGLANDIN SYNTHETASE
4129417 - MULTISYSTEM TEST MEANS
4134792 - SPECIFIC BINDING ASSAY WITH AN ENZYME MODULATOR AS A LABELING SUBSTANCE
4186251 - COMPOSITION AND METHOD FOR DETERMINATION OF CHOLESTEROL
4225485 - CHEMILUMINESCENT NAPHTHALENE-1,2-DICARBOXYLIC ACID HYDRAZIDE-LABELED POLYPEPTIDES AND PROTEINS
4226978 - +62 -GALACTOSYL-UMBELLIFERONE-LABELED AMINOGLYCOSIDE ANTIBIOTICS AND INTERMEDIATES IN THEIR PREPARATION
4230798 - UNITIZED URIC ACID TEST COMPOSITION AND DEVICE

ORGANIZATIONAL PATENTING (1/69-12/81) - - ALPHA LISTING

MILES LABORATORIES INC. (CONTINUED)
4238395 - DIMETHYL 7-+8 +107 -N-(PHTHALIMIDO)ALKYL+9 AMINONAPHTHALENE-1,2-DICARBOXYLATES
4238565 - SPECIFIC BINDING ASSAY WITH A PROSTHETIC GROUP AS A LABEL COMPONENT
4251632 - PREPARATION OF A BACTERIAL CELL AGGREGATE
4259233 - BETA-GALACTOSYL-UMBELLIFERONE-LABELED PROTEIN AND POLYPEPTIDE CONJUGATES
4268631 - APOGLUCOSE OXIDASE PREPARATION
4279992 - SPECIFIC BINDING ASSAY EMPLOYING AN ENZYME-CLEAVABLE SUBSTRATE AS LABEL
4297273 - CHEMILUMINESCENT PHTHALHYDRAZIDE-LABELED PROTEIN AND POLYPEPTIDE CONJUGATES

MITSUBISHI CHEMICAL INDUSTRIES LTD.
3974031 - PROCESS FOR PRODUCING L-CYSTEINE OR ITS DERIVATIVES
4078970 - INSOLUBILIZED GLUCOSE ISOMERASE
4106993 - METHOD FOR PRESERVATION OF AQUEOUS GLUCOSE ISOMERASE SOLUTION
4205127 - PROCESS FOR THE RENEWAL OF AN INSOLUBILIZED GLUCOSE ISOMERASE
4304864 - LONG-CHAIN ACYL-COENZYME-A SYNTHETASE

MITSUBISHI GAS-CHEMICAL COMPANY, INC.
4092220 - PROCESS FOR MANUFACTURE OF L(+)-TARTARIC ACID OR SALTS THEREOF

MITSUI SUGAR CO., LTD.
4191810 - PROCESS FOR THE PRODUCTION OF IMMOBILIZED GLUCOSE ISOMERASE

MOCHIDA PHARMACEUTICAL CO., LTD.
3723251 - METHOD FOR EXTRACTING UROKINASE
3723252 - METHOD FOR REMOVING PYROGENIC SUBSTANCES OUT OF UROKINASE
4218335 - STABILIZER FOR AN IMMUNOCHEMICAL MEASURING REAGENT

MONSANTO COMPANY
3573170 - ENZYME PRODUCTS
3578460 - PROCESS FOR THE PREPARATION OF PROTEINACEOUS MATERIALS
3578461 - PROCESS FOR THE PREPARATION OF PROTEINACEOUS MATERIALS
3578641 - RESINOUS ESTERS OF POLYMERIC N-HYDROXYIMIDES
3592736 - PURIFICATION AND SEPARATION OF NEUTRAL PROTEASE FROM PIGMENT AND ALKALINE PROTEASE
3592737 - PURIFICATION AND FRACTIONATION OF PROTEASE AND AMYLASE ACTIVITIES IN ENZYME MIXTURE
3592738 - PURIFICATION AND RECOVERY OF NEUTRAL AND ALKALINE PROTEASE USING CATIONIC SULFONATED PHENOL-FORMAL- DEHYDE RESIN
3594325 - AGGLOMERATED ENZYME PRODUCTS
3616232 - PURIFICATION AND FRACTIONATION OF ENZYME MIXTURE FROM AQUEOUS SOLUTION
3623955 - PURIFICATION AND RECOVERY OF USING CATIONIC EXCHANGE RESIN
3634258 - DETERGENT COMPOSITIONS CONTAINING SOLUBLE POLYMER-ENZYME PRODUCT
3634267 - ENZYME ADDITIVES
3692630 - COMPOSITION FOR PREPARING PROCESS CHEESE
3796635 - PROCESS FOR THE PREPARATION OF HEAT RESISTANT NEUTRAL PROTEASE ENZYME
3846239 - PROCESS FOR THE PREPARATION OF HEAT-RESISTANT ALPHA-GALACTOSIDASE ENZYME
4045297 - TRIGLYCERIDES DETERMINATION METHOD
4190708 - PRODUCTION OF UROKINASE

NALCO CHEMICAL COMPANY
4055467 - ENZYMATIC DISPERSION OF BIOLOGICAL SLIMES

NATIONAL PATENT DEVELOPMENT CORPORATION
3576760 - WATER SOLUBLE ENTRAPPING

NATIONAL RESEARCH DEVELOPMENT CORPORATION
3657416 - THROMBIN-LIKE DEFIBRINATING ENZYME FROM THE VENOM ANCISTRODON RHODOSTOMA
3674767 - NOVEL POLYMERIC MATERIALS CONTAINING TRIAZINYL GROUPS
3907642 - CHOLESTEROL OXIDASE AND METHOD OF EXTRACTING FROM NOCARDIA

ORGANIZATIONAL PATENTING (1/69-12/81) - - ALPHA LISTING

NATIONAL RESEARCH DEVELOPMENT CORPORATION (CONTINUED)
3907645 - CHOLESTEROL ASSAY
4275000 - PEPTIDE MACROMOLECULAR COMPLEXES

NATIONAL STARCH AND CHEMICAL CORPORATION
3893890 - PROCESS FOR INHIBITING THE ACTION OF PEPSIN

NIHON RIKA SEISHI KABUSHIKI KAISHA
3770672 - PASTE FOR GUMMED TAPE AND PROCESS FOR PRODUCING THE SAME FROM HYDROLYZED STARCH

NIPPON OIL COMPANY LTD.
4086138 - PROCESS FOR PRODUCING GLUCOSE ISOMERASE

NIPPON SODA COMPANY LIMITED
4225675 - ADSORBENT FOR UROKINASE AND PROCESS FOR THE PRODUCTION OF UROKINASE
4259448 - PROTEIN ADSORBENT AND PROCESS FOR THE PURIFICATION OF UROKINASE

NISSHIN FLOUR MILLING CO., LTD.
3767528 - PROCESS FOR THE MANUFACTURE OF 3,4-DISUBSTITUTED PHENYL-1-ALANINES

NISSIN SHOKUHIN KAISHA, LTD.
3827939 - PROCESS FOR MAKING A PROTEASE FOR FOODSTUFFS

NITTO BOSEKI CO., LTD.
4209459 - NOVEL L-LEUCYL-4-HYDROXYANILIDE DERIVATIVES

NITTO CHEMICAL INDUSTRY CO., LTD.
4248968 - PROCESS FOR PRODUCING ACRYLAMIDE OR METHACRYLAMIDE UTILIZING MICROORGANISMS

NODA INSTITUTE FOR SCIENTIFIC RESEARCH
3767530 - PROCESS FOR PRODUCING HALOPHILIC ALPHA-AMYLASE
3767533 - PROCESS FOR PRODUCING URICASE
3896000 - HALOPHILIC NUCLEASE AND A PROCESS FOR PRODUCING THE SAME
4039384 - CREATININE AMIDOHYDROLASE AND CREATINE AMIDINOHYDROLASE AND PROCESS FOR PRODUCING THEM

NONO TERAPEUTISK LABORATORIUM A/S
3840433 - DEHAIRING OF LEATHER

NORTH AMERICAN CORPORATION
3446707 - COATING MALT WITH GELATINIZED STARCH
3446708 - MALT PELLETS

NORTH CAROLINA STATE UNIVERSITY AT RALEIGH
4284553 - REVERSIBLE METHOD FOR COVALENT IMMOBILIZATION OF BIOCHEMICALS

NOVO INDUSTRI A/S
3979261 - PRODUCTION OF GLUCOSE ISOMERASE BY BACILLUS COAGULANS
3980521 - IMMOBILIZATION OF GLUCOSE ISOMERASE
4025389 - PROCESS AND ISOMERIZING GLUCOSE
4042460 - METHOD FOR PRODUCING GLUCOSE ISOMERASE
4064008 - GELATIN EXTRACTION
4080259 - PROCESS OF PREPARING L AND D ALPHA-AMINO ACIDS BY ENZYME TREATMENT OF DL-ALPHA-AMINO ACID AMIDE
4106991 - ENZYME GRANULATE COMPOSITION AND PROCESS FOR FORMING ENZYME GRANULATES
4110163 - BETA-GLUCANASE
4152211 - IRON CONTAINING CELL MASS GLUCOSE ISOMERASE PREPARATION
4266031 - PROTEASE PRODUCT OF REDUCED ALLERGENICITY

ORGANIZATIONAL PATENTING (1/69-12/81) - - ALPHA LISTING

NOVO LABORATORIES, INCORPORATED
4138290 - GLUCOSE ISOMERIZATION UNDER EXPANDED BED CONDITIONS

NOVO TERAPEUTISK LABORATORIUM A/S
3669843 - PROCESS FOR THE PRODUCTION OF URICASE
3674643 - PREPARATION OF PROTEOLYTIC ENZYMES HAVING MAXIMUM ACTIVITY AT HIGH ALKALINITY
3677902 - PREPARATION OF AMYLOGLUCOSIDASE
3723250 - PROTEOLYTIC ENZYMES, THEIR PRODUCTION AND USE
3827938 - ENZYME PRODUCTS
3950513 - PROCESS OF STABILIZING THERAPEUTICALLY USEFUL PLASMIN SOLUTIONS
3988207 - PREPARATION OF A MILK-COAGULATING ENZYME

ONO PHARMACEUTICAL COMPANY
3475276 - METHOD OF PRODUCING URICASE FROM YEAST
3862885 - DETERMINATION OF URIC ACID IN BLOOD WITH URICASE
4003794 - PROCESS FOR PRODUCING CHOLESTEROL OXIDASE
4030977 - METHOD FOR PURIFICATION OF PHYSIOLOGICALLY ACTIVE SUBSTANCE USING ENZYME-ENZYME INHIBITOR SYSTEM

ORGANON INC.
3591388 - PURIFICATION OF MICROBIAL RENNETS
3654090 - METHOD FOR THE DETERMINATION OF ANTIGENS AND ANTIBODIES

ORIENTAL YEAST CO., LTD.
3810823 - METHOD FOR ISOLATION OF ENZYMES

OSCAR MAYER + CO., INC.
3549501 - RECOVERY OF PEPSIN FROM LININGS OF PIG STOMACHS

OTSUKA PHARMACEUTICAL CO., LTD.
3674646 - METHOD FOR MANUFACTURING PROTEASE

OWENS-ILLINOIS INC.
4008126 - IMMOBILIZATION OF PROTEINS BY IN-SITU POLYMERIZATION

OXFORD PAPER COMPANY
3513072 - INACTIVATION OF ALPHA AMYLASE ENZYMES BY FLUOROSILICATE COMPOUNDS

PABST BREWING COMPANY
3594278 - PREPARATION OF POLYNUCLEOTIDES
3607653 - BACTERIAL PROTEASE COMPOSITIONS AND PROCESS FOR PREPARING THEM
3654086 - BACTERIAL PROTEASE AND BACTERIAL AMYLASE COMPOSITIONS
3700561 - RECOVERY OF ENZYMES
3717550 - LIQUID COMPOSITIONS OF BACTERIAL PROTEASE AND/OR AMYLASE AND PREPARATION THEREOF
3737376 - NON-DUSTING AND MOISTURE-RESISTANT ENZYME COMPOSITIONS
3741901 - WASHING COMPOSITIONS AND PROCESS
3795586 - RECOVERY OF ENZYMES
4247633 - REAGENT FOR COLORIMETRIC DETERMINATION OF CREATIVE PHOSPHOKINASE

PARKE DAVIS + COMPANY
4055718 - 9-(2-O-ACYL-BETA-D-ARABINOFURANOSYL)-ADENINE COMPOUNDS AND METHOD FOR THEIR PRODUCTION

PAULS + SANDARS, LIMITED
3708002 - MALTING OF DEHUSKED GRAIN

PENICK + FORD LIMITED
4014743 - METHOD FOR CONTINUOUS PREPARATION OF COOKED THINNED STARCH PASTES

ORGANIZATIONAL PATENTING (1/69-12/81) - - ALPHA LISTING

PENICK + FORD LIMITED (CONTINUED)
4029546 - COLUMN APPARATUS AND PROCESS FOR IMMOBILIZED ENZYME REACTIONS

PENNWALT CORPORATION
4116772 - FREE-FLOWING FUNGAL ENZYME COMPOSITION

PENTAPHARM A.G.
3849252 - ENZYME COMPOSITION AND PROCESS FOR THE MANUFACTURE THEREOF
4070245 - SUBSTRATE FOR THE QUANTITATIVE DETERMINATION OF PROTEOLYTIC ENZYMES
4137127 - PROCESS FOR THE PREPARATION OF THROMBIN-LIKE ENZYMES FROM SNAKE VENOMS

PFEIFER + LANGEN
3969538 - RECOVERY OF ENZYMES WITH ION EXCHANGERS
4111714 - PROCESS FOR OBTAINING AMINO ACIDS FROM THE RAW JUICES OF SUGAR MANUFACTURE

PFIZER INC.
3753860 - PRESERVATION OF BOVINE STOMACHS FOR RENNET EXTRACTION
3766015 - PRESERVATION OF BOVINE STOMACHS FOR RENNET EXTRACTION
3770587 - CHEMICALLY MODIFIED PROTEOLYTIC ENZYMES

PHARMEXBIO A.G.
3468760 - METHOD FOR OBTAINING UROKINASE

PHILIP MORRIS INCORPORATED
3636097 - ISOLATION OF MALIC ACID FROM TOBACCO

PIERCE CHEMICAL COMPANY
4002531 - MODIFYING ENZYMES WITH POLYETHYLENE GLYCOL AND PRODUCT PRODUCED THEREBY

PILLSBURY COMPANY
3423288 - PROCESS FOR PREPARING GENTIOBIOSE

PRESIDENT AND FELLOWS OF HARVARD COLLEGE
4111751 - METHOD OF PURIFYING ALCOHOL DEHYDROGENASE
4131727 - METHOD OF PURIFYING ALCOHOL DEHYDROGENASE AND AFFINITY RESIN THEREFOR

PROCTER + GAMBLE COMPANY
3451935 - GRANULAR ENZYME-CONTAINING LAUNDRY COMPOSITION
3557002 - STABILIZED AQUEOUS ENZYME PREPARATION
3558498 - GRANULAR DETERGENT COMPOSITION CONTAINING ENZYMES AND ENVIRONMENTAL CONTROL COMPONENTS
3560392 - DETERGENT COMPOSITIONS CONTAINING ENZYME- STABILIZING COLLAGEN-DERIVED PROTEINS
3574120 - HIGHLY ALKALINE DETERGENT COMPOSITION CONTAINING AN ENZYME DERIVED FROM THERMOPHILIC STREPTOMYCES RECTUS VAR. PROTEOLYTI
CUS
3627683 - DETERGENT COMPOSITION
3627688 - STABILIZED AQUEOUS ENZYME CONTAINING COMPOSITIONS
3629123 - STABILIZED AMYLASE COMPOSITIONS
3634266 - LIQUID DETERGENT COMPOSITIONS CONTAINING AMYLOLYTIC ENZYMES
3661786 - DETERGENT COMPOSITIONS CONTAINING STABILIZED ALPHA-AMYLASE
3707504 - DETERGENT COMPOSITION CONTAINING PROTEOLYTIC ENZYME ELABORATED BY THERMOACTINOMYCES VULGARIS ATCC 15734
3749671 - PROCESS OF PRODUCING ENZYME COMPOSITIONS
3755085 - PREVENTION OF ENZYME DEACTIVATION BY CHLORINE
3773674 - DETERGENT COMPOSITION CONTAINING ENZYMES
3819528 - STABILIZED AQUEOUS ENZYME COMPOSITIONS
3944470 - STABILIZATION AND ENHANCEMENT OF ENZYMATIC ACTIVITY
3985686 - DETERGENT COMPOSITIONS CONTAINING ENZYMES
4011169 - STABILIZATION AND ENHANCEMENT OF ENZYMATIC ACTIVITY

ORGANIZATIONAL PATENTING (1/69-12/81) - - ALPHA LISTING

PROJEKTIERUNG CHEMISCHE VERFAHRENSTECHNIK GMBH
4275159 - PROCESS FOR THE PRODUCTION OF XYLOSE BY ENZYMATIC HYDROLYSIS OF XYLAN

PROSPA S.A.
4202884 - DERIVATIVE OF LYSOZYME

RADIOCHEMICAL CENTRE LIMITED
4062733 - RADIO-ASSAY OF OESTROGEN

RAND LABORATORIES, INC.
3650903 - METHOD OF PRODUCTION OF FIBRINOLYTIC MATERIAL
3755083 - METHOD FOR RECOVERING URONTNASE FROM URINE CONTAINING THE SAME

RESEARCH CORPORATION
3522346 - NONTHROMBOGENIC MICROCAPSULES
3692631 - METHOD FOR BACTERIAL PROTEINASE
3766167 - ORALLY ACTIVE ANTI-COAGULANT
3768200 - APPARATUS FOR THE PRODUCTION OF ALGAE INDICATING A FILTERING MACHINE
3790446 - CYTOPHAGA ISOAMYLASE
3860483 - NOVEL METHOD OF DIAGNOSIS OF SCHISTOSOMIASIS AND REAGENTS THEREFORE
4071408 - NEURAMINIDASE
4108726 - SARCOIDOSIS TEST
4116770 - WAXY BARLEY STARCH WITH UNIQUE SELF-LIQUEFYING PROPERTIES

RESEARCH FOUNDATION FOR MICROBIAL DISEASES OF OSAKA UNIVERSI
3912594 - METHOD OF PRODUCING DEXTRANASE

RESEARCH FOUNDATION OF CHILDREN S HOSPITAL
4067776 - METHOD FOR DIFFERENTIAL DIAGNOSIS OF MENINGITIS WITH A LIMULUS LYSATE TEST

RESEARCH PRODUCTS REHOVOT LTD.
4251631 - CROSS-LINKED ENZYME MEMBRANE

RESEARCH TRIANGLE INSTITUTE
4053644 - PROCESS OF REMOVING THE COOKED FLAVOR FROM MILK
4087328 - PURIFICATION AND IMMOBILIZATION OF SULFHYDRYL OXIDASE

RHONE POULENC INDUSTRIES
3941657 - PURIFICATION OF D-AMINOACID OXIDASE
4288556 - MICROORGANISM AND PROTEOLYTIC ENZYME DERIVED THEREFROM

RHONE-POULENC S.A.
3753970 - CYCLOPEPTIDES DERIVED FROM POLYMYXINS AND THEIR PREPARATION
3875005 - THROMBOLYTIC AND FIBRINOLYTIC ENZYME FROM STREPTOMYCES
3875006 - PROTEOLYTIC ENZYME FROM STREPTOMYCES HYGROSCOPICUS
3906113 - NEW AMYLASE AND ITS PREPARATION BY FERMENTATION OF A PENICILLIUM

RIKAGAKU, KENKYUSHO
3826715 - NOVEL AMYLASE AND PROCESS FOR PREPARING THE SAME
3844890 - ALKALINE CELLULASE AND PREPARATION OF THE SAME
3923598 - PROCESS FOR PRODUCING CYCLODEXTRINS
3956064 - DEOXYRIBONUCLEASE AND PROCESS FOR ITS PREPARATION
4052262 - PREPARATION OF AN ALKALINE PROTEASE
4080261 - NOVEL ENDONUCLEASE AND PROCESS FOR PRODUCTION THEREOF
4135977 - PROCESS FOR PRODUCTION OF CYCLODEXTRIN
4161424 - NOVEL ENDONUCLEASE AND PROCESS FOR PRODUCTION THEREOF

ORGANIZATIONAL PATENTING (1/69-12/81) - - ALPHA LISTING

RIKAGAKU, KENKYUSHO (CONTINUED)
4259446 - PROCESS FOR PREPARATION OF DEOXYRIBONUCLEASES

RIKER LABORATORIES, INC.
4286064 - PROCESS FOR ISOLATING ACTIVE DEBRIDING AGENT FROM BROMELAIN

R. J. REYNOLDS TOBACCO COMPANY
3645848 - PROCESS OF PREPARING GLUCOSE ISOMERASE
3935068 - CONTINUOUS ISOMERIZATION PROCESS UTILIZING IMMOBILIZED FLOCCULATE ENZYME
3989596 - AGGREGATE OF DRIED FLOCCULATED CELLS
3989597 - AGGREGATE OF FLOCCULATED CELLS
4060456 - GLUCOSE ISOMERIZATION PROCESS
4061539 - PREPARATION AND USE OF GLUCOSE ISOMERASE
4179335 - THERMOSTABLE LACTASE DERIVED FROM +I BACILLUS COAGULANS

ROBERTSHAW CONTROLS COMPANY
4106995 - MICROORGANISM GROWTH INHIBITOR DEVICE

ROCKEFELLER UNIVERSITY
4245051 - HUMAN SERUM PLASMINOGEN ACTIVATOR

ROHM AND HAAS COMPANY
3649456 - SEPARATION OF POLYPEPTIDE SUBSTANCES WITH MACRORETICULAR RESINS
3816259 - THERMOSTABLE LACTASE
4010073 - FREE-FLOWING ENZYME COMPOSITION
4233405 - PROCESS FOR SPRAY DRYING ENZYMES

ROHM G.M.B.H. CHEMISCHE FABRIK
4247643 - PREPARATION OF STABILIZED CARRIER-BOUND PROTEINS

ROQUETTE FRERES
3890300 - STARCH HYDROLYSATE METHODS FOR ITS PREPARATION AND PRODUCTS BASED THEREON

ROUSSEL-UCLAF
3661715 - PROCESS FOR THE PREPARATION OF PROTEASES ACTIVE IN ALKALINE MEDIUM
3741872 - PROCESS FOR PURIFYING ENZYMES OF THE ASPARAGINASE-TYPE

SAGAMI CHEMICAL RESEARCH CENTER
4119493 - PROCESS FOR PRODUCING A PEPTIDE
4212945 - PROCESS FOR RECOVERING PROTEASE

SANDOZ LTD.
4061538 - ENZYMATICALLY OXIDIZING INTERFERON

SANKYO COMPANY LIMITED
3702805 - PROCESS FOR THE PRODUCTION OF A DEXTRAN-DEGRADING ENZYME
3985621 - STOPPING AGENTS FOR ENZYME REACTIONS OF DEHYDROGENASE SYSTEMS

SANRAKU-OCEAN CO., LTD.
3622458 - PRODUCTION OF A NEW PROTEASE
4059487 - PURINE NUCLEOSIDE 5' -PHOSPHATE(MONO, DI OR TRI)3' (2')-DIPHOSPHATES AND PROCESSES FOR THEIR PREPARATION
4152209 - NUCLEOTIDE PYROPHOSPHOTRANSFERASE AND METHOD OF PREPARATION

SCHERING AKTIENGESELLSCHAFT
3987159 - STABLE SENSITIZED ERYTHROCYTES AND PREPARATION MEANS

ORGANIZATIONAL PATENTING (1/69-12/81) - - ALPHA LISTING

SCHERING CORPORATION
3455968 - 9ALPHA-HALOGENO-11BETA-AZIDO-STEROIDS AND METHODS FOR THEIR MANUFACTURE

SCHWARZ BIORESEARCH, INC.
3459637 - ENZYME DIGESTION OF NUCLEIC ACIDS

SEIKAGAKU KOGYO CO., LTD.
3549500 - NOVEL CHONDROITINASE AND METHOD OF ITS RECOVERY
3994782 - METHODS FOR EXTRACTING AND PURIFYING KALLIDINOGENASE
4038141 - METHODS FOR EXTRACTING AND PURIFYING KALLIDINOGENASE

SHIONOGI + CO. LTD.
3915801 - PROCESS FOR PREPARING 6-AMINOPENICILLANIC ACID
3925155 - PREPARATION OF 6-AMINOPENICILLANIC ACID 1-OXIDE
3926728 - NEW PROCESS FOR THE PREPARATION OF 6-AMINOPENICILLANIC ACID
4073687 - ENZYMATIC ACYLATION TO AFFORD BETA-LACTAM ANTIBIOTICS

SMITHKLINE CORPORATION
4104379 - SUBSTITUTED 1-ALKYLTHIOPHENYL-2,3,4,5-TETRAHYDRO-1H-3-BENZAZEPINE COMPOUNDS

SNAM PROGETTI S.P.A.
4008363 - PROCESS FOR THE PREPARATION OF ADENINE DERIVATIVES MADE FUNCTIONAL AND PRODUCTS OBTAINED THEREFROM
4065353 - METHOD FOR THE PREPARATION OF D-CARBAMYL AMINOACIDS AND THE CORRESPONDING D-AMINOACIDS
4088639 - MACROMOLECULAR ADENINE NUCLEOTIDE DERIVATIVES
4100029 - METHOD FOR IMPROVING THE ACTIVITY OF OXIREDUCTASE ENZYMES EMBEDDED IN FILAMENTARY STRUCTURES
4248704 - PHENYLALANINE AMMONIA LYASE OCCLUDED FIBERS FOR REDUCING PHENYLALANINE BLOOD-LEVEL
4248967 - ENZYMIC COMPLEXES ADAPTED TO CONVERT RACEMIC HYDANTOINS INTO OPTICALLY ACTIVE AMINOACIDS, AND THEIR APPLICATIONS
4250253 - COMPOSITION ADAPTED FOR THE DETERMINATION OF TRI-IODO THYRONINE AND DIAGNOSIS METHOD EMPLOYING SAME
4291123 - PRODUCTION OF FRUCTOSE AND FRUCTOSE-BASE SYRUPS AND MEANS FOR CARRYING OUT SUCH PRODUCTION

SOCIETA ITALIANA RESINE S.I.R. S.P.A.
3813319 - PROCESS FOR THE MANUFACTURE OF PROTEASES
3898133 - PROCESS OF PREPARING AN ENZYME WITH LIPOLYTIC ACTIVITY

SOCIETE ANONYME LES PRODUITS ORGANIQUES DU
3705085 - METHOD FOR EXTRACTING AND SEPARATING ENZYMES

SOCIETE ANONYME ROURE BERTRAND DUPONT
4055594 - INTERMEDIATES USEFUL FOR THE PRODUCTION OF NORPATCHOULENOL

SOCIETE D ASSISTANCE TECHNIQUE POUR PRODUITS NESTLE S.A.
3852478 - MILK-CLOTTING ENZYME
3966555 - ALPHA-GALACTOSIDASE PRODUCTION
4081330 - PRODUCTION OF A MILKCURDLING ENZYME

SOCIETE D ETUDES ET D APPLICATIONS BIOCHIMIQUES AND
3620923 - URATE OXIDASE AND PROCESS FOR THE PRODUCTION THEREOF
3810820 - URATE OXIDASE AND PROCESS FOR THE PRODUCTION THEREOF

SOCIETE RAPIDASE, S.A.
3623956 - PREPARATION OF MICROBIAL ALKALINE PROTEASE BY FERMENTATION WITH BACILLUS SUBTILIS, VARIETY LICHENIFORMIS

SPA-SOCIETA PRODOTTI ANTIBIATICS S.P.A.
3515643 - PROCESS FOR THE PRODUCTION OF LYSOZYME
3586607 - PROCESS FOR THE RECOVERY AND PURIFICATION OF LYSOZYME
3937815 - LYSOZYME DERIVATIVES

ORGANIZATIONAL PATENTING (1/69-12/81) - - ALPHA LISTING

SRI INTERNATIONAL
4243752 - PRODUCTION OF INCREASED YIELDS OF CELLULOLYTIC ENZYMES FROM +I THIELAVIA TERRESTRIS +B AND SEPARATING METHODS THEREFOR

STAMICARBON B.V.
4247645 - PROCESS FOR REMOVING MELAMINE FROM MELAMINE-CONTAINING LIQUIDS

STANDARD BRANDS INCORPORATED
3524798 - STABILIZATION OF ALPHA-AMYLASE PREPARATIONS
3544345 - METHOD
3623953 - METHOD FOR ISOMERIZING GLUCOSE SYRUPS
3630845 - PROCESS FOR PREPARING DEXTROSE CONTAINING SYRUPS
3642582 - ALPHA PURIFICATION OF AMYLASE
3660236 - PRODUCTION OF GLUCOAMYLASE
3666628 - PROCESS FOR GROWING MICROORGANISMS
3694314 - PROCESS FOR ISOMERIZING GLUCOSE TO FRUCTOSE
3725202 - ENZYME TREATMENT
3736232 - PROCESS FOR GROWING MICROORGANISMS
3784409 - PROCESS FOR PURIFYING GLUCOSE SYRUPS CONTAINING FRUCTOSE
3829362 - PROCESS FOR ENZYMATICALLY ISOMERIZING GLUCOSE TO FRUCTOSE
3834940 - METHOD OF REFINING AN ENZYMATICALLY PRODUCED FRUCTOSE-CONTAINING SOLUTION
4001083 - PROCESS FOR PRODUCING ISOAMYLASE
4001084 - PROCESS FOR PRODUCING ISOAMYLASE
4011137 - PROCESS FOR PRODUCING DEXTROSE USING MIXED IMMOBILIZED ENZYMES
4011139 - PROCESS FOR PRODUCING ALPHA-1,6 GLUCOSIDASES USING THERMOPHILIC MICROORGANISMS
4089745 - PROCESS FOR ENZYMATICALLY CONVERTING CELLULOSE DERIVED FROM CORN HULLS TO GLUCOSE

STANFORD RESEARCH INSTITUTE
4081328 - PRODUCTION OF CELLULASE BY A THERMOPHILIC THIELAVIA TERRESTRIS

STANFORD UNIVERSITY, LELAND JUNIOR, THE BOARD OF TRUSTEES OF
4237224 - PROCESS FOR PRODUCING BIOLOGICALLY FUNCTIONAL MOLECULAR CHIMERAS

SUMITOMO CHEMICAL COMPANY, LIMITED
4147592 - PURIFICATION OF UROKINASE
4189350 - PROCESS FOR PURIFYING UROKINASE
4244943 - METHOD FOR PREPARING UROKINASE INJECTION
4255521 - METHOD FOR ISOLATION OF GLUCOSE ISOMERASE

SWIFT + COMPANY
3442764 - PROCESS OF PURIFYING BROMELAIN
3798208 - MODIFICATION OF PROTEIN WITH ETHYLENIMINE
4001480 - ENCAPSULATION PROCESS UTILIZING MICROORGANISMS AND PRODUCTS PRODUCED THEREBY
4024285 - PROCESS FOR PREPARING PLANT PROTEASE SOLUTIONS

SYNTEX (U.S.A) INC.
3880934 - NITROPHENYLOXY-BUTANEDIOLS
4070453 - DIPLOID PORCINE EMBRYONIC CELL STRAINS, CULTURES PRODUCED THEREFROM, AND USE OF SAID CULTURES FOR PRODUCTION OF VACCINES

SYVA COMPANY
3690834 - LIGAND DETERMINATION WITH SPIN LABELED COMPOUNDS BY RECEPTOR DISPLACEMENT
3817837 - ENZYME AMPLIFICATION ASSAY
3852157 - COMPOUNDS FOR ENZYME AMPLIFICATION ASSAY
3867366 - OPIATE IMIDATES AND PROTEIN CONJUGATES THEREOF
3875011 - ENZYME IMMUNOASSAYS WITH GLUCOSE-6-PHOSPHATE DEHYDROGENASE
3878187 - POLYPEPTIDE DERIVATIVES OF AMPHETAMINE AND ANALOGS FOR IMMUNOASSAYS
3880715 - IMMUNOASSAY FOR HAPTENS

ORGANIZATIONAL PATENTING (1/69-12/81) - - ALPHA LISTING

SYVA COMPANY (CONTINUED)

3884898 - NORMORPHINE DERIVATIVES BONDED TO PROTEINS
3905871 - LACTAM CONJUGATES TO ENZYMES
3917582 - ISOTHIOCYANATE AND THIOUREA DERIVATIVES OF BENZOYL ECGONINE CONJUGATED TO POLYPEPTIDES
3935074 - ANTIBODY STERIC HINDRANCE IMMUNOASSAY WITH TWO ANTIBODIES
3966556 - COMPOUNDS FOR ENZYME AMPLIFICATION ASSAY METHADONE ANALOGS
3975237 - COMPOUNDS FOR ENZYME AMPLIFICATION ASSAY - - ECGONINE ANALOGS
4039385 - CARDIAC GLYCOSIDE ENZYME CONJUGATES
4040907 - IODOTHYRONINE ENZYME CONJUGATES
4043872 - POLYIODOTHYRONINE IMMUNOASSAY
4045420 - NON-OXO-CARBONYL CONTAINING BENZOYL ECGONINE AND COCAINE COMPOUNDS POLYPEPTIDE AND DERIVATIVES THEREOF
4046636 - DIAZEPAM ENZYME CONJUGATES
4058511 - TEGRETOL ANTIGENS AND ANTIBODIES
4065354 - LYSOZYME CONJUGATES FOR ENZYME IMMUNOASSAYS
4067774 - COMPOUNDS FOR ENZYME AMPLIFICATION ASSAY
4069105 - LIDOCAINE ANTIGENS AND ANTIBODIES
4121975 - PRETREATMENT OF SAMPLES FOR POLYIODOTHYRONINE ASSAYS
4130462 - RECEPTOR STERIC HINDRANCE IMMUNOASSAY FOR RECEPTOR DETERMINATION
4171244 - ENZYME-BOUND-POLYIDOTHYRONINE
4191613 - MALATE DEHYDROGENASE CONJUGATES FOR ENZYME IMMUNOASSAYS
4193983 - LABELED LIPOSOME PARTICLE COMPOSITIONS AND IMMUNOASSAYS THEREWITH
4203802 - INHIBITABLE ENZYME AMPLIFICATION ASSAY
4220722 - METHOD FOR CONJUGATING TO POLYAMINO COMPOUNDS EMPLOYING HALOACYL GROUPS AND COMPOSITIONS PREPARED THEREBY
4230805 - THEOPHYLLINE ANTIGENS AND ANTIBODIES
4233401 - ANTIENZYME HOMOGENEOUS COMPETITIVE BINDING ASSAY
4235969 - PROCAINAMIDE ANTIGEN CONJUGATES AND ANTIBODIES
4241177 - PROPANOLOL ANTIGEN CONJUGATES AND ANTIBODIES
4262089 - THEOPHYLLINE ANTIGENS AND ANTIBODIES
4275160 - IMIPRAMINE DERIVATIVES AND POLY(AMINO ACID) CONJUGATES
4281061 - DOUBLE ANTIBODY FOR ENHANCED SENSITIVITY IN IMMUNOASSAY
4281065 - PHENCYCLIDINE CONJUGATES TO ANTIGENIC PROTEINS AND ENZYMES
4282325 - ENZYME BOUND CORTICOSTEROIDS
4287300 - CHARGE EFFECTS IN ENZYME IMMUNOASSAYS
4288553 - DISOPYRAMIDE COMPOUNDS FOR CONJUGATING PROTEINS USED IN IMMUNOASSAYS FOR DISOPYRAMIDE

TAISHO PHARMACEUTICAL CO., LTD.
3652400 - PROCESS FOR THE PREPARATION OF AMYLASE
3911111 - ENZYME INHIBITOR SPECIFIC AGAINST THIOL PROTEASE AND PROCESS FOR PRODUCTION THEREOF

TAKEDA CHEMICAL INDUSTRIES LTD.
3443969 - METHOD FOR PREPARING CONDIMENTS FROM YEASTS
3515642 - METHOD FOR PREPARING A STABILIZED ENZYME COMPOSITION
3649454 - BACTERIOLYTIC ENZYME AND PROCESS FOR THE PRODUCTION THEREOF
3652399 - ALKALI PROTEASE
3660564 - INTERFERON INDUCTION
3691014 - METHOD FOR PRODUCING PROTEASE
3749642 - METHOD FOR THE PRODUCTION OF AMINOPENICILLINS
3798128 - METHOD FOR THE PRODUCTION OF GRANULAR ENZYME PREPARATION
3816253 - METHOD FOR THE PRODUCTION OF CEPHALOSPORINS
3846240 - PREPARATION OF A DUCTLESS POWDERY PROTEASE-CONTAINING COMPOSITION
3933790 - PHOSPHORYLXYLOSTASIN
3945888 - METHOD FOR THE PRODUCTION OF CEPHALOSPORINS
4014860 - PLASMINOSTREPTIN (ENZYME INHIBITOR) AND METHOD FOR PRODUCING IT FROM STREPTOMYCES
4075405 - BETA-1,3-GLUCAN DERIVATIVES

ORGANIZATIONAL PATENTING (1/69-12/81) - - ALPHA LISTING

TANABE SEIYAKU CO. LTD.
3484255 - PREVENTION OF CLOUDING OF SYRUP IN WHICH CANNED ORANGE SEGMENTS ARE PRESERVED
3652402 - ASPARAGINASE HAVING ANTI-TUMOR ACTIVITY AND PROCESS FOR PREPARING THE SAME
3730838 - ENZYMATIC PREPARATION OF L-CITRULLINE
3791926 - PROCESS FOR THE PRODUCTION OF L-ASPARTIC ACID
3898127 - PROCESS FOR PREPARING UROCANIC ACID
3898128 - PROCESS FOR PREPARING L-ALANINE
4090919 - WATER-INSOLUBLE TANNIN PREPARATION FOR IMMOBILIZATION OF PROTEINS
4160697 - METHOD FOR PURIFICATION OF CRUDE UROKINASE

TECHNICON INSTRUMENTS CORPORATION
4194067 - PROCESS FOR THE PURIFICATION OF CARBOHYDRATE CONTAINING ENZYMES
4206286 - IMMOBILIZATION OF PROTEINS ON INORGANIC SUPPORTS

TEMPLE UNIVERSITY
3674645 - KERATINOLYTIC ENZYME ISOLATED FROM TRICHOPHYTON MENTAGORPHYTES AND PROCESS THEREFOR
3793149 - CELL-BOUND KERATINOLYTIC ENZYMES OF TRICHOPHYTON MENTAGROPHYTES AND PROCESS THEREFOR

THE UNIVERSITY OF WATERLOO
3975236 - FERMENTATION PROCESSES FOR MAKING PENICILLIN AND CELLULASE

TOHO PHARMACEUTICAL INDUSTRIES CO., LTD.
4252902 - PROCESS FOR PURIFICATION OF CRUDE KALLIKREIN

TOKUYAMA SODA KABUSHIKI KAISHA
4010072 - PROCESS FOR PREPARING L-TARTARIC ACID
4017362 - MICROBIOLOGICAL PROCESS FOR PREPARING L-TARTARIC ACID IN PRESENCE OF SURFACTANTS

TOKYO TANABE COMPANY, LIMITED
3919049 - PROCESS FOR PREPARING BETA-GALACTOSIDASE

TOWNSEND AND TOWNSEND
3781212 - AEROSOL ENZYME DETERGENTS STABILIZED WITH CARBON DIOXIDE

TOYO BOSEKI KABUSHIKI KAISHA
3431176 - PREPARATION OF URICASE
4301244 - QUANTITATIVE ANALYSIS OF FREE FATTY ACID AND REAGENT COMPOSITION THEREFOR

TOYO JOZO COMPANY, LTD.
3649455 - PRODUCTION OF LIPASE
3737383 - PROCESS FOR PRODUCTION OF ENZYME ALKALINE DEXTRANASE
3761354 - PROCESS FOR THE PRODUCTION OF CEPHALEXIN
3763000 - ENZYMATIO PRODUCTION OF CEPHALEXIN
3821081 - PROCESS FOR PRODUCING 7-AMINO DESACETOXY CEPHALOSPORANIC ACID
3901763 - METHOD FOR THE PURIFICATION OF GLYCERO-LIPID-SPLITTING ENZYMES
3909360 - PROCESS FOR PRODUCING INSOLUBILIZED ENZYME
3915798 - PROCESS FOR PRODUCING 7-AMINO DESACETOXY CEPHALOSPHORANIC ACID
3960662 - PROCESS FOR THE PRODUCTION OF 7-AMINO-CEPHEM COMPOUNDS
4135980 - CHOLINE OXIDASE
4216292 - PROCESS FOR THE PRODUCTION OF SARCOSINE OXIDASE
4237222 - LACTATE OXIDASE PROCESS FOR THE MANUFACTURE THEREOF AND ANALYTICAL METHOD AND KIT FOR THE USE OF THE SAME
4237267 - DISULFIDE COMPOUNDS OF A CARRIER, HAVING S+13 S EXCHANGE REACTIVITY
4246342 - PROCESS FOR THE MANUFACTURE OF PYRUVATE OXIDASE, AND ANALYTICAL METHOD AND KIT FOR THE USE OF THE SAME
4275161 - PROCESS FOR THE MANUFACTURE OF L-ALPHA-GLYCEROPHOSPHATE OXIDASE

ORGANIZATIONAL PATENTING (1/69-12/81) - - ALPHA LISTING

TOYO SODA MANUFACTURING CO., LTD.
4212946 - PROCESS FOR RECOVERING PROTEASE

TRUSTEES OF TUFTS COLLEGE
4078972 - METHOD OF PURIFICATION OF CARBOXYPEPTIDASE G/1

TWYFORD LABORATORIES LIMITED
3711376 - COAGULANTS

UNILEVER N.V.
3579425 - PREPARATION OF PROSTAGLANDINS

UNITED BRANDS COMPANY
3440143 - METHOD OF PREPARING ENZYMES FROM PLANT TISSUES CONTAINING PHENOLS

UNITED KINGDOM OF GREAT BRITAIN AND NORTHERN IRELAND, -
3783102 - PRODUCTION OF L-ASPARAGINASE
3843445 - ASPARAGINASE PRODUCTION

UNITED STATES OF AMERICA, AGRICULTURE
3562113 - RAPID MICROBIOLOGICAL PRODUCTION OF ALPHA- GALACTOSIDASE
3583894 - ENZYME PREPARATION OF HESPERETIN DIHYDROCHALCONE GLUCOSIDE
3589982 - PRODUCTION OF L-ASPARAGINASE
3725085 - FLAVOR ENHANCEMENT OF ALLIUM PRODUCTS
3729379 - HYDROXY-CONJUGATED FATTY ACIDS
3736231 - PREPARATION OF INSOLUBILIZED ENZYMES
3869345 - LIMONOATE DEHYDROGENASE AND PREPARATION THEREOF
3917512 - LIMONOATE"NAD (P) OXIDOREDUCTASE

UNITED STATES OF AMERICA, ARMY
3764475 - ENZYMATIC HYDROLYSIS OF CELLULOSE TO SOLUBLE SUGARS
4275163 - CELLULASE-PRODUCING MICROORGANISM

UNITED STATES OF AMERICA, DEPARTMENT OF ENERGY
3972775 - CONVERSION OF CELLULOSIC MATERIALS TO SUGAR

UNITED STATES OF AMERICA HEALTH EDUCATION AND WELFARE, MESNE
3910822 - ISOLATION OF GLUCOCEREBROSIDASE FROM HUMAN PLACENTAL TISSUE
3912595 - METHOD OF PURIFYING ENZYMES USING BORONIC ACIDS COVALENTLY BONDED TO AN INSOLUBLE SUPPORT
4275057 - SEVEN-MEMBERED RING COMPOUNDS AS INHIBITORS OF CYTIDINE DEAMINASE

UNITED STATES OF AMERICA, INTERIOR
4113567 - INSOLUBILIZATION OF ENZYMES ON MODIFIED PHENOLIC POLYMERS

UNITED STATES OF AMERICA, NATIONAL AERONAUTICS AND SPACE ADM
3423290 - LYOPHILIZED REACTION MIXTURES
3437560 - USE OF THE ENZYME HEXOKINASE FOR THE REDUCTION OF INHERENT LIGHT LEVELS
3660240 - FLAVIN CO-ENZYME ASSAY
3745089 - PROTEIN STERILIZATION METHOD OF FIREFLY LUCIFERASE USING REDUCED PRESSURE AND MOLECULAR SIEVES

UNITED STATES OF AMERICA, NAVY
4066506 - METHOD OF SEPARATING AND PURIFYING TWO ACTIVE FORMS OF UROKINASE USING AFFINITY CHROMATOGRAPHY
4069106 - IMMOBILIZATION OF ENZYMES ON KERATIN

UNITED STATES OF AMERICA
4001087 - AFFINITY LABELLING ENZYMES WITH ESTERS OF AROMATIC SULFONIC ACIDS

ORGANIZATIONAL PATENTING (1/69-12/81) - - ALPHA LISTING

UNITIKA LTD.
4273873 - PREPARATION OF ANTITHROMBOGENIC POLYMERIC MATERIALS

UNIVERSITY OF ALABAMA IN BIRMINGHAM MEDICAL AND EDUCATIONAL
4022667 - SUBSTRATE SOLUTION FOR CARBOXYLIC ESTER HYDROLASE DETERMINATION
4071407 - NOVEL MALTASE ENZYME PRODUCED BY A NEW YEAST STRAIN
4081326 - A METHOD FOR REMOVING MALTOTETRAOSE AND LOWER SACCHARIDES FROM SOLUTION

UNIVERSITY OF ARKANSAS FOUNDATION
4220721 - METHOD FOR ENZYME REUTILIZATION

UNIVERSITY OF CALIFORNIA, THE REGENTS OF
3749643 - MEASUREMENT OF URINARY D(-)VANILLYLMANDELIC ACID
3817830 - METHOD FOR OBTAINING OPTICALLY ACTIVE COMPOSITION FROM RACEMATE OF VANILLYLMANDELIC ACID
3817833 - ENZYME COMPOSITION FOR MEASUREMENT OF URINARY D-VANILLYLMANDELIC ACID
4007283 - PRODUCTION AND UTILIZATION OF LACTASE

UNIVERSITY OF DELAWARE
4172763 - PREPARATION OF HIGH PURITY XANTHINE OXIDASE FROM BOVINE MILK
4238566 - XANTHINE OXIDASE

UNIVERSITY OF EDINBURGH
3875004 - ENZYMATIC PROCESS FOR PRODUCING PROSTAGLANDINS C
4058664 - PROSTAGLANDIN C/3

UNIVERSITY OF ILLINOIS FOUNDATION
3444041 - IN VITRO SYNTHESIS OF RIBONUCLEIC ACIDS AND ENZYME THEREFOR
3444042 - PURIFIED REPLICASES AND THEIR USES
3444043 - INTERFERENCE WITH BIOLOGICALLY ACTIVE RNA FORMATION
3444044 - REPLICATION OF MUTANT NUCLEIC ACIDS
3661893 - SYNTHESIS IN VITRO OF NUCLEIC ACIDS AND PRODUCTS USED THEREIN AND PRODUCTS PRODUCED THEREFROM
3689475 - SYNTHESIZED MUTANT RNA AND METHODS OF PREPARING SAME

UNIVERSITY OF MINNESOTA, THE REGENTS OF
3510402 - NONDISCRIMINATING PROTEINASE AND THE PRODUCTION THEREOF

UNIVERSITY OF PENNSYLVANIA
4165258 - PLASMINOGEN ACTIVATING ENZYME-SPECIFIC COMPETITIVE INHIBITOR

UNIVERSITY OF SOUTHERN CALIFORNIA
3769414 - SERUM CARDIAC GLYCOSIDE ASSAY
3959077 - ENZYME PREPARATION FOR SERUM CARDIAC GLYCOSIDE ASSAY

UNIVERSITY OF VIRGINIA
3849254 - PROCESS FOR EFFECTING ENZYMATIC REACTIONS IN AEROSOLS
4038144 - METHOD OF INCREASING FERMENTATION YIELDS

UNIVERSITY OF WATERLOO
4025394 - FERMENTATION PROCESSES USING SCRAPED TUBULAR FERMENTOR

UOP INC.
4237231 - METHOD OF PURIFYING GLUCOSE ISOMERASE AND A COMPOSITION FOR STORING SAME
4250263 - METHOD OF PURIFICATION OF THERMALLY STABLE ENZYMES
4256838 - METHOD OF PURIFICATION OF GLUCOSE ISOMERASE

ORGANIZATIONAL PATENTING (1/69-12/81) - - ALPHA LISTING

UPJOHN COMPANY
3740318 - COMPOSITION OF MATTER AND PROCESS
3761356 - PROCESS FOR PRODUCING AN ESTERASE
4043870 - PROCESS OF PURIFYING CHOLESTEROL OXIDASE
4088537 - DELTA\1 / DEHYDROGENATION OF CORTICOIDS WITHOUT SIDE CHAIN DEGRADATION BY SEPTOMYXA
4091204 - PROCESS FOR RECOVERING LINCOMYCIN FROM FERMENTATION BEER
4242456 - RADIOENZYMATIC ASSAY OF CATECHOLAMINES
4284587 - RADIOENZYMATIC ASSAY OF CATECHOLAMINES
4288542 - RADIOENZYMATIC ASSAY OF CATECHOLAMINES

VELSICOL CHEMICAL CORPORATION
3556946 - MALTING PROCESS

WARNER-LAMBERT COMPANY
4212941 - METHOD FOR THE PRODUCTION OF 9-(2-O-ACYL-+62 -D-ARABINOFURANOSYL)ADENINE COMPOUNDS

WASHINGTON UNIVERSITY
4267271 - RADIOIMMUNOASSAY FOR ISOENZYMES OF CREATIVE KINASE HAVING A B-SUBUNIT AND REAGENTS THEREFOR

WILLIAM ZINSSER + CO.
4067773 - ENZYME-CONTAINING ARTICLE FOR REMOVING PAPER ADHERED TO A SURFACE
4092175 - METHOD OF REMOVING PAPER ADHERED TO A SURFACE

WISCONSIN ALUMNI RESEARCH FOUNDATION
4103006 - GLYCOSIDES OF 2,6-BIS(HYDROXY-PHENYL)-3,7-DIOXABICYCLO [3,3,0] OCTANE

WITCO CHEMICAL CORPORATION
3697451 - STABLE ENZYME CONTAINING LIQUID DETERGENT

WORTHINGTON BIOCHEMICAL CORPORATION
3440142 - PRODUCTION OF ASPARAGINASE
3823071 - PROSTATIC ACID PHOSPHATASE DETERMINATION

W. R. GRACE + CO.
3868448 - METHOD FOR BLOAT CONTROL
3898131 - ENZYME FOR TREATMENT AND PREVENTION OF BLOAT

XEROX CORPORATION
3746622 - COMPOSITION AND PROCESS
3860484 - ENZYME STABILIZATION
4020268 - AGAROSE CONTAINING AFFINITY MATRIX MATERIALS

YAMANOUCHI PHARMACEUTICAL CO., LTD.
4242449 - 7-METHOXY CEPHALOSPORINS AND PROCESS OF PRODUCING THEM

YAMASA SHOYU KABUSHIKI KAISHA
3779867 - PRODUCTION OF POLYNUCLEOTIDES
3849249 - PRODUCTION OF SYNTHETIC POLYNUCLEOTIDES
3930955 - PROCESS FOR PRODUCING PTERIN DEAMINASES HAVING ANTITUMOR ACTIVITY
4224407 - ASSAY OF L-LYSINE
4234691 - L-LYSINE +60 -OXIDASE

YEDA RESEARCH AND DEVELOPMENT CO., LTD.
3627640 - ENZYME PURIFICATION AND DECOLORIZATION
3850749 - PREPARATION OF OLIGORIBONUCLEOTIDES

ORGANIZATIONAL PATENTING (1/69-12/81) - - ALPHA LISTING

YELLOW SPRINGS INSTRUMENT COMPANY, INC.
3979274 - MEMBRANE FOR ENZYME ELECTRODES

ZAIDAN HOJIN BISEIBUTSU KAGAKU KENKYU KAI
3840516 - BIOLOGICALLY ACTIVE SUBSTANCE, PEPSTATIN AND PRODUCTION PROCESSES THEREOF
3973608 - MICROBIAL PRODUCTION OF CERTAIN ISOFLAVONES
3974184 - MICROBIAL PRODUCTION OF CERTAIN ISOFLAVONES
4209588 - PROCESS FOR PRODUCING NEW ANTITUMOR ANTHRACYCLINE ANTIBIOTICS
4219622 - PROCESS FOR PRODUCING ANTIBIOTICS MA 144-M+HD 1 +B AND MA 144-M+HD 2

ZELLSLOFFABRIK WALDHOF A.G.
3516907 - METHOD FOR PRODUCING 5'-MONONUCLEOTIDES

ZERIA-SHINYAKU KOGYO KABUSHIKI KAISHA
4258030 - UROKINASE PREPARATION FOR ORAL ADMINISTRATION

Z-L LIMITED PARTNERSHIP
4234577 - ERGOSTADIENTRIOLS, COMPOSITIONS CONTAINING SAME, AND METHODS OF PREPARING AND USING SAME

INVENTORS OF INDIVIDUALLY OWNED PATENTS (1/75-12/81) (ALPHA LISTING)

INVENTOR NAME			STREET	CITY	ST	ZIP/CNTRY
AKPAROV	VALERY	K.	ULITSA LUGOVAYA, 33, KV. 26	FRYAZINO, MOSKOVSKOI		SU
4264738 - PROCESS FOR PURIFICATION OF PROTEOLYTIC ENZYMES						
ALI	MAJID		19 EDGEMONT PL.	TEANECK	NJ	07666
4256833 - ENZYME IMMUNOASSAY FOR ALLERGIC DISORDERS						
BABENKO	JULIA	SEMENOVNA	ULITSA GOGOLYA, 27A, KV. 35	DNEPROPETROVSK		SU
3963577 - LYTIC ENZYME AND METHOD OF PREPARING SAME						
BASHKOVICH	ALEXANDR	PAVLOVICH	PROSPEKT M. TOREZA, 40, KORPUS	LENINGRAD		SU
4066503 - ENZYME OF HYDROLYTIC ACTION, ENZYMATIC PREPARATION, METHOD FOR PREPARING BOTH AND THEIR USES						
4075322 - ENZYME COMPOSITION						
BASTIN	MICHEL	F.	4551 TOUR PANORAMIQUE	54100 NANCY		FR
3989848 - METHOD OF MASHING FOR THE PRODUCTION OF WORT AND APPARATUS FOR THE CARRYING OUT OF THIS PROCESS						
BECKER	MILTON	J.	2925 W. JEROME	CHICAGO	IL	60645
4007008 - PREPARATION OF REFERENCE SERUM FROM ANIMAL BLOOD						
BELOUSOV	ANATOLY	A.	SOSINSKAYA ULITSA, 6, KV. 46	MOSCOW		SU
4286062 - PROCESS FOR PRODUCING AN ENZYME PREPARATION TO TENDERIZE MEAT PRODUCTS						
BERDELLE-HILGE	PHILIPP		125 HIGH ST.	BOSTON	MA	02110
3878301 - PROCESS FOR CONTROLLING THE PRODUCTIVITY OF MICRO-ORGANISMS						
BJORKSTEN	JOHAN		4601 FISH HATCHERY RD., RT. 4	MADISON	WI	53711
3860485 - PREPARATION OF OLIGOMERS OF MICROENZYMES						
BLUMBERG	SHMARYAHU		C/O BIOPHYSICS RESEARCH LABORA	BOSTON	MA	02111
3886042 - ACYLATION OF PROTEOLYTIC ENZYMES						
BRANNER-JORGENSEN	SVEN		24 JOHANNEVEJ	DK-2920 CHARLOTTENLU		DK
4255454 - THERMAL DESTABILIZATION OF MICROBIAL RENNET						
CHUNG	ALFRED		8781 SW. 87TH ST.	MIAMI	FL	33173
4260682 - HIGH SENSITIVITY ASSAYS FOR ANGIOTENSIN CONVERTING ENZYME						
4276378 - HIGH SENSITIVITY ASSAYS FOR ANGIOTENSIN CONVERTING ENZYME						
CORY	CYNTHIA	S.	R.R. NO. 6 P.O. BOX 67	DANVILLE	IN	46122
4077842 - STABILIZED GLUCOSE ISOMERASE ENZYME CONCENTRATE						
CORY	ROBERT	PAUL	R.R. NO. 6 P.O. BOX 67	LA GRANGE	IL	
4077842 - STABILIZED GLUCOSE ISOMERASE ENZYME CONCENTRATE						
COULTHARD	JOHN	LOUIS	LOT 9, FRANKSTON RD.	CRANBOURNE SOUTH, 39		AU
3981803 - METHOD AND APPARATUS FOR ANAEROBIC FERMENTATION						
CRAVEN	DAVID	BARRY	18 EVERSLEY PARK, STORETON RD.	OXTON, BIRKENHEAD, C		EN
3904478 - IMMOBILIZED CO-ENZYMES						
DE SALVO	WALTER	ANTHONY	237 PROSPECT AVE.	NORTH ARLINGTON	NJ	07032
3858854 - ENZYMATIC DETERGENT						

INVENTORS OF INDIVIDUALLY OWNED PATENTS (1/75-12/81) (ALPHA LISTING)

INVENTOR NAME			STREET	CITY	ST	ZIP/CNTRY
DEAN	PETER	DUNCAN	43 REDGATE	FORMBY, LANCASHIRE		EN
3904478 - IMMOBILIZED CO-ENZYMES						
4011205 - ENZYME SEPARATION						
4011377 - ENZYME SEPARATION						
4012283 - ENZYME SEPARATION						
4012568 - ENZYME SEPARATION						
4012569 - ENZYME SEPARATION						
4012570 - ENZYME SEPARATION						
4012571 - ENZYME SEPARATION						
4012572 - ENZYME SEPARATION						
EL-SAYED	REFAAT	M.	NASBYDALSVAG	TABY		SE
4237003 - PROCESS FOR BIOLOGICAL PURIFICATION OF LIQUID WASTES						
FAYEMI	ALFRED		15 FRANCINE CT.	WHITE PLAINS	NY	10607
4256833 - ENZYME IMMUNOASSAY FOR ALLERGIC DISORDERS						
FISHMAN	LOUIS		143 N. GROVE ST.	VALLEY STREAM	NY	11580
3940317 - METHOD OF ISOLATION OF LYSOZYME						
GAIDA	ANATOLY	V.	3DOROZHNY PROEZD, 5 KORPUS 2,	MOSCOW		SU
4264738 - PROCESS FOR PURIFICATION OF PROTEOLYTIC ENZYMES						
GAY	MAX	M.	24, RUE DE BRUXELLES A 67/	STRASBOURG (BAS-RHIN		FR
3958015 - PURIFIED PLANT PROTEIN CONCENTRATE						
GRIFFON	HENRI		2 PLACE MAZAS	75012 PARIS		FR
3975553 - DEPROTEINATION OF YEAST CELLS						
GRIGORIEV	EVGENY	FEDOROVIC	ULITSA DARVINA, 40, KV. 1	DNEPROPETROVSK		SU
3963577 - LYTIC ENZYME AND METHOD OF PREPARING SAME						
GRINBERG	GRIGORY	EFIMOVICH	PROSPEKT METALLISTOV, 82, KV.	LENINGRAD		SU
4066503 - ENZYME OF HYDROLYTIC ACTION, ENZYMATIC PREPARATION, METHOD FOR PREPARING BOTH AND THEIR USES						
4075322 - ENZYME COMPOSITION						
HALL	LEO	M.	406 DEVON DR.	HOMEWOOD	AL	35209
4225672 - METHOD FOR PRODUCING MALTOOLIGOSACCHARIDE GLYCOSIDES						
HENRY	PHILIP	D.	832 BRICKEN	KIRKWOOD	MO	63122
4049496 - RAPID SEPARATION OF PLASMA CREATINE KINASE ISOENZYMES						
HOLMQUIST	BARTON		C/O BIOPHYSICS RESEARCH LABORA	BOSTON	MA	02111
3886042 - ACYLATION OF PROTEOLYTIC ENZYMES						
HOUCK	JOHN	C.		WASHINGTON	DC	
4226854 - DEBRIDEMENT OF DEVITALIZED TISSUE WITH HYDROLYTIC ENZYME PRODUCT						
KATZ	FRIEDRICH	D.	96-08 70TH AVE.	NEW YORK	NY	11375
3940317 - METHOD OF ISOLATION OF LYSOZYME						
KENNEY	EDWARD	JOSEPH	42 STEVENS ST.	BERNARDSVILLE	NJ	07924
3858854 - ENZYMATIC DETERGENT						

INVENTORS OF INDIVIDUALLY OWNED PATENTS (1/75-12/81) (ALPHA LISTING)

INVENTOR NAME			STREET	CITY	ST	ZIP/CNTRY
KHARASCH	JEROME	A.	6300 W. TOUHY AVE.	NILES	IL	60648
3982999 - COMPLEXING CRESOLASE WITH COPPER CHELATING AGENTS						
KING	JOHN	BURNHAM	SANDOWN LODGE, GLEBE RD.	RONDEBOSCH, CAPE		ZA
4086140 - PROCESS FOR ISOLATING FIBRINOLYTIC SUBSTANCES						
KING	JOHN	BURNHAM	SANDOWN LODGE, GLEBE ROAD	RONDEBOSCH, CAPE		ZA
4039658 - FIBRINOLYTIC SUBSTANCES						
KLEIN	GEROLD	K.	MEREPOINT RD.	BRUNSWICK	ME	04011
4197291 - HYDROLYTIC ENZYME MATERIAL						
4226854 - DEBRIDEMENT OF DEVITALIZED TISSUE WITH HYDROLYTIC ENZYME PRODUCT						
KUHLMEY	WALTER		HEERSTRASSE 55	28 BREMEN, SCHWACHHA		DT
3992364 - PHYSIOLOGICALLY ACTIVE POLYPEPTIDE PREPARATION						
KULBAKH	VALTER	OSVALDOVI	BUKHARESTSKAYA ULITSA, 86, KOR	LENINGRAD		SU
4066503 - ENZYME OF HYDROLYTIC ACTION, ENZYMATIC PREPARATION, METHOD FOR PREPARING BOTH AND THEIR USES						
4075322 - ENZYME COMPOSITION						
LEVY	MILTON		39-95 48TH ST.	NEW YORK	NY	11104
3940317 - METHOD OF ISOLATION OF LYSOZYME						
LINE	WILLIAM	F.	829 LATHROP	RIVER FOREST	IL	60305
4007008 - PREPARATION OF REFERENCE SERUM FROM ANIMAL BLOOD						
LONGENECKER	ROBERT	W.	6860 SW 113TH ST.	MIAMI	FL	33156
4302536 - COLORIMETRIC IMMUNOASSAY PROCESS						
LOWE	CHRISTOPHER	ROBIN	"FAIRLIGHT," 238 WINDSOR ROAD	MAIDENHEAD, BERKSHIR		EN
4012570 - ENZYME SEPARATION						
LOWE	CHRISTOPHER	ROBIN	"FAIRLIGHT", 238 WINDSOR ROAD	MAIDENHEAD, BERKSHIR		EN
4011205 - ENZYME SEPARATION						
4011377 - ENZYME SEPARATION						
4012283 - ENZYME SEPARATION						
4012568 - ENZYME SEPARATION						
4012569 - ENZYME SEPARATION						
4012571 - ENZYME SEPARATION						
4012572 - ENZYME SEPARATION						
MAIER	CHARLES	L. JR.	P.O. BOX 232	YARDLEY	PA	19067
4104029 - PROCEDURE FOR THE ASSAY OF PHARMACOLOGICALLY IMMUNOLOGICALLY AND BIOCHEMICALLY ACTIVE COMPOUNDS IN BIOLOGICAL FLUIDS						
MALKKI	YRJO			HELSINKI		SF
4062730 - PROCEDURE FOR PRODUCING ENZYMES						
MAMONOV	NIKOLAI	D.	ULITSA MALJUGINOI, 156, KV. 10	ROSTOV-NA-DONU		SU
4286062 - PROCESS FOR PRODUCING AN ENZYME PREPARATION TO TENDERIZE MEAT PRODUCTS						
MANN	GEORGE	F.	117 VENNER RD.	LONDON		GB
4232124 - METHOD OF PRODUCING PLASMINOGEN ACTIVATOR						

INVENTORS OF INDIVIDUALLY OWNED PATENTS (1/75-12/81) (ALPHA LISTING)

INVENTOR NAME			STREET	CITY	ST	ZIP/CNTRY
MARKKANEN	PERTTI			VANTAA		SF
4062730 - PROCEDURE FOR PRODUCING ENZYMES						
MARTINI	ALESSANDRO		VIA DELLA BARCA	FRAZIONE PONTE S. GI		IT
4141791 - MILK COAGULATING MICROBIAL ENZYME						
MATTSSON	RAIMO			HELSINKI		SF
4062730 - PROCEDURE FOR PRODUCING ENZYMES						
MESA-TEJADA	RICARDO		42 JUNIPER PL.	BRIARCLIFF MANOR	NY	10510
4256833 - ENZYME IMMUNOASSAY FOR ALLERGIC DISORDERS						
MODABBER	FARROKH	Z.	P.O. BOX 1310, SCHOOL OF PUBLI	TEHERAN		IR
3988115 - DIAGNOSTIC METHOD FOR DETERMINING PATHOLOGICAL CONDITION BY ANTIGEN-COMBINING CAPACITY OF LYMPHOCYTES						
MODROVICH	IVAN	E.	1043 MESA DR.	CAMARILLO	CA	93010
4250254 - STABILIZED LIQUID ENZYME AND COENZYME COMPOSITIONS						
4271264 - STABILIZED LIQUID ENZYME AND COENZYME COMPOSITIONS						
4277562 - STABILIZED LIQUID ENZYME AND COENZYME COMPOSITIONS						
4282316 - STABILIZED ENZYMIC SOLUTIONS FOR DETERMINING UREA						
MODROVICH	IVAN	E.	591 BEVERLY DR.	CAMARILLO	CA	93010
4153511 - STABILIZED LIQUID COENZYME COMPOSITIONS						
MOLL	MANFRED		13TER RUE DE HOUDEMONT	54500 VAN DOEUVRE		FR
3989848 - METHOD OF MASHING FOR THE PRODUCTION OF WORT AND APPARATUS FOR THE CARRYING OUT OF THIS PROCESS						
NALEBUFT	DONALD		89 LAKE SHORE DR.	OAKLAND	NJ	07436
4256833 - ENZYME IMMUNOASSAY FOR ALLERGIC DISORDERS						
NORIMOTO	YUH		1-2, KYOWA-CHO	HOFU, YAMAGUCHI		JA
3920519 - ENZYMATIC HYDROLYSIS OF RIBONUCLEIC ACID						
OHMURA	SHIGERU		543, NEGOYA	NUMAZU, SHIZUOKA		JA
3920519 - ENZYMATIC HYDROLYSIS OF RIBONUCLEIC ACID						
PETERS	BRUNO		8 RUE DES BATELEURS	54410 VANDIVEIRLLE-D		FR
3989848 - METHOD OF MASHING FOR THE PRODUCTION OF WORT AND APPARATUS FOR THE CARRYING OUT OF THIS PROCESS						
POLATOVSHAYA	OLGA	GRIGORIEV	ULITSA UCHITELSKAYA, 19, KORPU	LENINGRAD		SU
4066503 - ENZYME OF HYDROLYTIC ACTION, ENZYMATIC PREPARATION, METHOD FOR PREPARING BOTH AND THEIR USES						
POLATOVSKAYA	OLGA	GRIGORIEV	ULITSA UCHITELSKAYA, 19, KORPU	LENINGRAD		SU
4075322 - ENZYME COMPOSITION						
PROKOPOVICH	AGNESSA	VLADIMIRO	BOLSHEOKHTINSKY PROSPEKT, 79,	LENINGRAD		SU
4066503 - ENZYME OF HYDROLYTIC ACTION, ENZYMATIC PREPARATION, METHOD FOR PREPARING BOTH AND THEIR USES						
4075322 - ENZYME COMPOSITION						
PRONINA	MARIA	IVANOVNA	ULITSA SEDOVA, 109, KV. 33	LENINGRAD		SU
4066503 - ENZYME OF HYDROLYTIC ACTION, ENZYMATIC PREPARATION, METHOD FOR PREPARING BOTH AND THEIR USES						

INVENTORS OF INDIVIDUALLY OWNED PATENTS (1/75-12/81) (ALPHA LISTING)

INVENTOR NAME			STREET	CITY	ST	ZIP/CNTRY
PRONINA	MARIA	IVANOVNA	ULITSA SEDOVA, 109, KV. 33	LENINGRAD		SU
4075322 - ENZYME COMPOSITION						
RAMANARAYANAN	MADHAVA	P.	100 HAVEN AVE.	NEW YORK	NY	10032
4256833 - ENZYME IMMUNOASSAY FOR ALLERGIC DISORDERS						
RIVKINA-PEVTSOVA	KHASYA	IONOVNA	ULITSA SADOVAYA, 92, KV. 5	LENINGRAD		SU
4066503 - ENZYME OF HYDROLYTIC ACTION, ENZYMATIC PREPARATION, METHOD FOR PREPARING BOTH AND THEIR USES						
4075322 - ENZYME COMPOSITION						
ROTMAN	M.	BORIS	11 MAYFLOWER ST.	PROVIDENCE	RI	02906
4002532 - ENZYME CONJUGATES						
ROUHIAINEN	LEO			HELSINKI		SF
4062730 - PROCEDURE FOR PRODUCING ENZYMES						
RUDENSKAYA	GALINA	N.	ULITSA TSANDERA 7, KV. 251	MOSCOW		SU
4264738 - PROCESS FOR PURIFICATION OF PROTEOLYTIC ENZYMES						
RUDENSKAYA	GALINA	NIKOLAEVN	ULITSA TSANDERA, 7, KV. 281	MOSCOW		SU
4100028 - METHOD FOR PURIFICATION OF PROTEOLYTIC ENZYMES						
RYAN	JAMES	W.	3420 POINCIANA AVE.	MIAMI	FL	33133
4260682 - HIGH SENSITIVITY ASSAYS FOR ANGIOTENSIN CONVERTING ENZYME						
4276378 - HIGH SENSITIVITY ASSAYS FOR ANGIOTENSIN CONVERTING ENZYME						
SCHENK	ROY	U.	411 S. BROOKS ST., APT. 2	MADISON	WI	53715
3860485 - PREPARATION OF OLIGOMERS OF MICROENZYMES						
SCOTT	HENRY	L.	204 E. HOUGHTON	TUSCOLA	IL	61953
3979522 - BIOCHEMICAL PROCESS FOR THE SYNTHESIS OF PROTEIN FROM CELLULOSE AND STARCH-CONTAINING PLANTS						
SEVASTYANOV	BORIS	A.	LENINSKY PROSPEKT, 36, KV. 165	MOSCOW		SU
4286062 - PROCESS FOR PRODUCING AN ENZYME PREPARATION TO TENDERIZE MEAT PRODUCTS						
SHILOV	GENNADY	G.	PROSPEKT LENINA, 121, KV. 56	ROSTOV-NA-DONU		SU
4286062 - PROCESS FOR PRODUCING AN ENZYME PREPARATION TO TENDERIZE MEAT PRODUCTS						
SHIMIZU	YOSHIAKI		1188, SHIMOTOGARI, NAGAIZUMI-C	SUNTO, SHIZUOKA		JA
3920519 - ENZYMATIC HYDROLYSIS OF RIBONUCLEIC ACID						
SHINKARENKO	LJUBOV	NIKOLAEVN	ULITSA KOMSOMOLSKAYA, 64/66, K	DNEPROPETROVSK		SU
3963577 - LYTIC ENZYME AND METHOD OF PREPARING SAME						
SLOANE	NATHAN	H.	1842 BROOKSIDE DR.	GERMANTOWN	TN	38038
3884760 - PRODUCTION OF UROKINASE						
STEKOLNIKOV	LEONID	I.	LIPETSKAYA ULITSA, 26, KV. 13	MOSCOW		SU
4286062 - PROCESS FOR PRODUCING AN ENZYME PREPARATION TO TENDERIZE MEAT PRODUCTS						
STEPANOV	VALENTIN	M.	ULITSA CHERTANOVSKAYA, 35, KV.	MOSCOW		SU
4264738 - PROCESS FOR PURIFICATION OF PROTEOLYTIC ENZYMES						

INVENTORS OF INDIVIDUALLY OWNED PATENTS (1/75-12/81) (ALPHA LISTING)

INVENTOR NAME			STREET	CITY	ST	ZIP/CNTRY
STEPANOV	VALENTIN	MIKHAILOV	ULITSA CHERTANOVSKAYA, 33, KOR	MOSCOW		SU
4100028 - METHOD FOR PURIFICATION OF PROTEOLYTIC ENZYMES						
TATANO	TOSHIO		1188, SHIMOTOGARI, NAGAIZUMI-C	SUNTO, SHIZUOKA		JA
3920519 - ENZYMATIC HYDROLYSIS OF RIBONUCLEIC ACID						
VALLEE	BERT	L.	C/O BIOPHYSICS RESEARCH LABORA	BOSTON	MA	02111
3886042 - ACYLATION OF PROTEOLYTIC ENZYMES						
VESTBERG	KARIN	PINHOLT		ARHUS		DK
3960665 - PRODUCTION OF PROTEOLYTIC ENZYMES						
VIHKO	PIRKKO		JAAKONKUJA 1 E 3	90230 OULU 23		FI
4205130 - METHOD OF PURIFICATION OF HUMAN PROSTATIC ACID PHOSPHATASE						
VILLADSEN	KARL	JOHAN		BRABRAND		DK
3960665 - PRODUCTION OF PROTEOLYTIC ENZYMES						
WELTMAN	JOEL	K.	4 WILDACRE LANE	BARRINGTON	RI	02806
4002532 - ENZYME CONJUGATES						
WELTMAN	JOEL	K.	164 SUMMIT AVE.	PROVIDENCE	RI	02906
4218539 - ENZYME CONJUGATES AND METHOD OF PREPARATION AND USE						
WIN	MAUNG	HLA	536 SNYDER AVE.	BERKELEY HEIGHTS	NJ	07922
3858854 - ENZYMATIC DETERGENT						
YOUNG	MURRAY	MOO	300 REGINA ST. N., APT. 1-1206	WATERLOO, ONTARIO		CA
3947323 - FERMENTATION PROCESSES						
ZIMNUKHOVA	EVGENIA	SEMENOVNA	ULITSA PIONERSTROYA, 18, KV. 2	LENINGRAD		SU
4066503 - ENZYME OF HYDROLYTIC ACTION, ENZYMATIC PREPARATION, METHOD FOR PREPARING BOTH AND THEIR USES						
4075322 - ENZYME COMPOSITION						

PATENTS (1/63-12/81) WITH NEITHER ASSIGNMENT NOR INVENTOR INFORMATION IN THE DATA BASE

3433712 - CHOLINESTERASE TEST
3438864 - PRODUCTION OF CELLULASE, ANTIBIOTIC AND ANTI-TUMOR SUBSTANCES BY GROWING EUMYCES ATCC 16425
3446626 - METHOD FOR PREPARING A BROMELAIN SOLUTION FOR ANTE-MORTEM INJECTION
3446706 - PROCESS FO PRODUCING PALNT PROTEASES
3455787 - PROCESS FOR EXTRACTING BROMELAIN
3498964 - PERIPHERAL VASODILATOR PEPTIDE OBTAINED FROM THE ANIMALS OF THE FAMILY OTARIIDAE AND A METHOD OF PREPARING THE SAME
3507751 - PROCESS FOR THE PRODUCTION OF ACID MALT
3513073 - NOVEL LIPASE COMPOSITION AND METHOD FOR PRODUCING SAME
3527671 - PROCEDURE FOR THE SEPARATION OF ISOTOPE- CONTAINING AMINO ACID RACMATES INTO THEIR OPTICAL D-AND L-ANTIPODES
3558432 - WAXOLYTIC ENZYME PREPARATION
3575864 - STABILIZED PROTEASE OF BACTERIAL ORIGIN AND METHOD OF STABILIZING SUCH PROTEASE
3592734 - PROCESS FOR CONVERTING STARCH AND OTHER POLYSACCHARIDES INTO DEXTROSE AND MALTOSE CONTAINING PRODUCTS
3616257 - REAGENT FOR ASSAYING THYROMIMETIC COMPOUNDS
3657071 - FRACTIONATION OF PROTEINS

PATENTS (1/63-12/81) WITH NEITHER ASSIGNMENT NOR INVENTOR INFORMATION IN THE DATA BASE

3660238 - EXTRACTION OF ASPARAGINASE FROM BACTERIAL CULTURE
3669844 - METHOD OF PRODUCING PROTEASE BY MICROORGANISM
3676352 - PROCESS FOR THE MANUFACTURE OF ENZYME AND PERBORATE-CONTAINING DETERGENT COMPOSITIONS
3681197 - METHOD AND SOLUTION FOR MAINTAINING BIOLOGICAL ACTIVITY IN ENZYMES
3682842 - STABILIZED ENZYMIC COMPOSITIONS CONTAINING PROTEASE AND ALPHA AMYLASE OF BACTERIAL ORIGIN AND METHOD OF STABILIZING SUCH COMPOSITI
3684659 - PROCESS FOR THE ENRICHMENT AND PURIFICATION OF L-ASPARAGINASE
3686072 - L-ASPARAGINASE FROM ERWINIA
3687717 - METHOD OF COATING PARTICLES BY ROTATING A FLUIDIZED BED OF THE PARTICLES
3694315 - METHOD FOR PROCESSING PAPAW LATEX PAPAYA TO OBTAIN PAPAIN
3695999 - ISOLATION OF ENZYMES FROM AQUEOUS MEDIA BY MEANS OF POLYANIONS
3699001 - PREPARATION OF BROMELAIN FROM THE PINEAPPLE STEMS
3699002 - DEXTRAN HYDROLIZING ENZYMES
3700560 - ENZYMATIC PRODUCTION OF CATECHOL FROM PHENOL
3709790 - PROTEOLYTIC ENZYME FORMULATION
3711377 - METHOD OF PRODUCTION OF UROKINASE
3736230 - PROCESS FOR PRODUCING 6-AMINOPENCILLANIC ACID
3746649 - STABLE LIQUID ENZYME PRODUCT
3752741 - EXTRACTION OF PROTLASES
3755084 - PROCESS FOR THE PREPARATION OF APOENZYME
3785926 - PROCESS FOR THE ENZYMATIC REPRODUCTION OF INFORMATIONALLY ACTIVE RNA
3802998 - METHOD OF FERMENTING A MYCOCIDAL ANTIBIOTIC OF POLYENE SERIES
3816263 - BIOLOGICAL TEST
3817834 - RECOVERY OF SALTED-OUT PROTEIN
3819482 - METHOD OF PREPARING HIGH YIELDS OF DOUBLE STRANDED RIBONUCLORIC ACID
3826716 - METHOD FOR PREPARING ALPHA-AMYLASE
3843444 - MEMBRANE SEPARATION PROCESS
3855196 - BIOLOGICALLY ACTIVE PEPTIDE AND METHOD OF PREPARING THE SAME

3071517	3072532	3074854	3075886	3080296	3081225	3081236	3085945	3086921	3088879	3091575	3095358
3095410	3096251	3096253	3097049	3097145	3098015	3100740	3101302	3102081	3102113	3104206	3104207
3106209	3107203	3108928	3109780	3116215	3116218	3116221	3116223	3117063	3119750	3123539	3124517
3127327	3127388	3133001	3134723	3134724	3135667	3136703	3137639	3138542	3139385	3139387	3140984
3141832	3141833	3145153	3147196	3148182	3149051	3149052.	3149053	3150058	3150059	3150060	3151039
3152967	3157583	3157635	3157648	3158551	3159551	3160508	3163586	3168446	3168447	3168448	3168449
3171792	3172815	3173847	3174909	3177200	3178359	3183170	3184394	3186919	3186920	3186921	3188279
3189529	3193393	3193470	3198712	3198781	3200110	3201325	3207674	3208908	3208918	3210257	3210258
3212996	3214345	3220931	3223594	3226304	3227626	3230144	3231385	3232832	3234106	3234199	3235337
3235468	3236741	3239394	3239428	3242056	3243354	3248300	3248301	3249512	3249513	3249514	3251742
3251750	3254003	3255015	3255094	3256157	3256158	3259550	3260654	3262863	3264193	3265586	3265587
3267006	3268417	3269918	3272717	3272718	3274059	3274072	3274073	3275453	3276971	3278391	3280006
3281331	3281332	3282782	3284212	3284301	3284316	3284451	3287232	3288683	3291702	3293142	3293143
3293144	3294641	3296092	3296094	3297546	3297547	3297548	3297604	3298924	3298926	3300524	3301768
3301848	3303100	3303102	3304236	3304238	3304239	3310475	3310476	3311542	3312599	3313711	3317400
3317402	3317404	3318771	3318782	3322632	3325364	3326771	3326776	3329578	3330738	3331751	3332851
3332852	3335066	3335068	3337414	3337415	3340156	3341559	3342812	3344028	3344037	3345268	3345269
3347927	3349006	3355361	3357894	3360439	3361630	3361643	3367835	3367836	3368903	3378443	3378462
3380891	3380892	3380893	3383290	3384552	3385763	3386889	3389058	3390054	3391059	3398055	3403077
3404068	3405034	3409719	3410754	3413198	3414479	3415804	3416997	3418211	3419471	3419472	

ENZYMES PER SE

FRONT PAGES OF SELECTED PATENTS

Jan-Apr 1982 U.S. Patents (33)		Selected U.S. Patents (43)	
4,323,651	4,317,883	4,202,941	4,268,632
4,326,029	4,317,882	4,216,292	4,275,160
4,325,832	4,318,846	4,211,842	4,220,722
4,326,033	4,313,938	4,228,241	4,191,613
4,323,647	4,315,988	4,229,540	4,235,969
4,323,649	4,315,002	4,229,538	4,212,945
4,322,496	4,316,955	4,234,691	4,275,166
4,321,363	4,310,628	4,273,874	4,237,231
4,318,990	4,311,791	4,238,566	4,243,752
4,321,324	4,311,790	4,237,230	4,205,130
4,320,151	4,312,943	4,229,539	4,205,129
4,321,323	4,309,502	4,258,134	4,194,067
4,318,980	4,310,625	4,255,519	4,189,350
4,318,983	4,309,505	4,245,051	4,250,262
4,318,982	4,310,626	4,275,163	4,250,263
4,318,989	4,310,624	4,275,162	4,252,902
4,317,881		4,266,031	4,264,738
		4,259,446	4,235,970
		4,259,447	4,232,124
		4,245,050	4,228,240
		4,268,631	4,241,185
		4,250,261	

PATENTS ARE LISTED IN ORDER OF APPEARANCE

United States Patent [19]
Long et al.
[11] **4,323,651**
[45] * **Apr. 6, 1982**

[54] **THERMOSTABLE LACTASE DERIVED FROM BACILLUS**

[75] Inventors: **Margaret E. Long; Chin K. Lee,** both of Winston-Salem, N.C.

[73] Assignee: **R. J. Reynolds Tobacco Company,** Winston-Salem, N.C.

[*] Notice: The portion of the term of this patent subsequent to Dec. 18, 1996, has been disclaimed.

[21] Appl. No.: **193,169**

[22] Filed: **Oct. 2, 1980**

Related U.S. Application Data

[60] Continuation of Ser. No. 63,668, Aug. 6, 1979, abandoned, which is a division of Ser. No. 660,094, Feb. 23, 1976, Pat. No. 4,197,335, which is a continuation-in-part of Ser. No. 529,329, Dec. 4, 1974, abandoned.

[51] **Int. Cl.**[3] **C12N 9/38;** C12N 1/20
[52] **U.S. Cl.** **435/207;** 435/253; 435/832
[58] **Field of Search** 435/207, 253, 832

[56] **References Cited**

U.S. PATENT DOCUMENTS

3,816,259 6/1974 Collinge et al. 435/207
4,007,283 2/1977 Crisan et al. 435/207

OTHER PUBLICATIONS

P. J. Anema, Biochimica et Biophysica Acta. 89, 495–502 (1964).
Wierzbicki et al., Journal of Dairy Science, vol. 56(1), 26–32 (1973).

Primary Examiner—Lionel M. Shapiro
Attorney, Agent, or Firm—Neuman, Williams, Anderson & Olson

[57] **ABSTRACT**

A thermostable lactase is obtained by cultivation of a member of the genus Bacillus in a suitable nutrient medium. The resulting lactase-containing cells or the cell-free enzyme are useful for the hydrolysis of lactose in a variety of substrate media.

4 Claims, No Drawings

United States Patent [19]
Louderback
[11] **4,325,832**
[45] **Apr. 20, 1982**

[54] **ENZYME REFERENCE COMPOSITION**

[75] Inventor: **Allan L. Louderback,** Temple City, Calif.

[73] Assignee: **Beckman Instruments, Inc.,** Fullerton, Calif.

[21] Appl. No.: **114,009**

[22] Filed: **Jan. 21, 1980**

Related U.S. Application Data

[63] Continuation-in-part of Ser. No. 17,871, Mar. 5, 1979, abandoned.

[51] **Int. Cl.**[3] **G01N 33/16;** C09K 3/00
[52] **U.S. Cl.** ..... **252/408;** 23/230 B; 424/2; 424/3; 435/2; 435/4; 435/15; 435/16; 435/17; 435/18; 435/19; 435/20; 435/21; 435/22; 435/24; 435/25; 435/26; 435/188
[58] **Field of Search** ..... 252/408; 23/230 B; 435/2, 4, 21, 18, 22, 20, 17, 24, 26, 15, 16, 19, 25, 188; 424/2, 3

[56] **References Cited**

U.S. PATENT DOCUMENTS

3,466,249 9/1969 Anderson 252/408
3,558,522 1/1971 Louderback et al. 252/408
3,629,142 12/1971 Marbach 252/408
3,682,835 8/1972 Louderback 252/408
3,728,226 4/1973 Louderback 252/408
3,853,465 12/1974 Rush et al. 252/408
3,876,375 4/1975 Maurukas 252/408
4,007,008 2/1977 Becker et al. 252/408
4,121,905 10/1978 Maurukas 252/408
4,141,856 2/1979 Dorwart, Jr. et al. 252/408
4,158,544 6/1979 Louderback 252/408
4,212,939 7/1980 Myrick et al. 252/408

OTHER PUBLICATIONS

Tietz, *Fundamentals of Clinical Chemistry,* W. B. Saunders Co., Philadelphia, Pa., p. 634, (1970).
Henry et al., Clinical Chemistry, Principles and Technics, 2nd Ed., Harper & Rowe, New York, N. Y., pp. 774–778, (1974).

Primary Examiner—Teddy S. Gron
Attorney, Agent, or Firm—R. J. Steinmeyer; J. E. Vanderburgh; Robert S. Frieman

[57] **ABSTRACT**

A stable enzyme reference composition having an excellent shelf-life. The composition comprises at least one enzyme of known value; about 20 to about 40 weight percent of at least one alkylene polyol having from 2 to 5 carbon atoms; about 3 to about 8 grams (gm) per deciliter (dl) total protein present in a human serum albumin matrix; and about 60 to about 80 weight percent water.

12 Claims, No Drawings

United States Patent [19]
Yukawa et al.
[11] **4,326,029**
[45] **Apr. 20, 1982**

[54] **PROCESS FOR PRODUCTION OF L-ASPARTIC ACID**

[75] Inventors: **Hideaki Yukawa; Terukazu Nara; Yoshihiro Takayama,** all of Ibaraki, Japan

[73] Assignee: **Mitsubishi Petrochemical Co., Ltd.,** Tokyo, Japan

[21] Appl. No.: **177,044**

[22] Filed: **Aug. 11, 1980**

[30] **Foreign Application Priority Data**

Aug. 10, 1979 [JP] Japan 54/101820

[51] **Int. Cl.**[3] **C12P 13/20**
[52] **U.S. Cl.** **435/109;** 435/172; 435/232; 435/840
[58] **Field of Search** 435/109, 172, 116, 232

[56] **References Cited**

U.S. PATENT DOCUMENTS

3,907,641 9/1975 Nakayama et al. ..... 435/116 X
3,970,519 7/1976 Tsuchida et al. 435/116
4,000,040 12/1976 Tsuchida et al. 435/109

Primary Examiner—Lionel M. Shapiro
Attorney, Agent, or Firm—Sughrue, Mion, Zinn, Macpeak and Seas

[57] **ABSTRACT**

A process for producing L-aspartic acid economically and efficiently from fumaric acid or a salt thereof and ammonia or an ammonium salt using a cultured product obtained by aerobically culturing an microorganism belonging to the Genus Brevibacterium and having resistance to α-amino-n-butyric acid.

2 Claims, No Drawings

United States Patent [19]
Holleman et al.
[11] **4,326,033**
[45] **Apr. 20, 1982**

[54] **MODIFIED UROKINASE HAVING EXTENDED ACTIVITY AND METHOD OF MAKING**

[75] Inventors: **William H. Holleman; Shaw-Guang Lee,** both of Libertyville; **Paul P. Hung,** Waukegan, all of Ill.

[73] Assignee: **Abbott Laboratories,** North Chicago, Ill.

[21] Appl. No.: **146,823**

[22] Filed: **May 5, 1980**

[51] **Int. Cl.**[3] **C12N 9/48;** C12N 9/72
[52] **U.S. Cl.** **435/212;** 435/215
[58] **Field of Search** 435/212, 215

[56] **References Cited**

U.S. PATENT DOCUMENTS

3,930,944 1/1976 Nicol 435/215
3,950,223 4/1976 Yugari et al. ..... 435/215 X
4,061,538 12/1977 Dorner et al. 435/68
4,184,917 1/1980 Dorner et al. 435/68

OTHER PUBLICATIONS

Bose et al., Journal of Biological Chemistry, vol. 252, No. 23, pp. 8336–8337, Dec. 10, 1977.
Fujisawa et al., Journal of Biological Chemistry, vol. 253, pp. 8677–8679, Dec. 25, 1978.
Advances in Enzymology, vol. 41, pp. 99–128 (1974).

Primary Examiner—Lionel M. Shapiro
Attorney, Agent, or Firm—Gildo E. Fato; Robert L. Niblack

[57] **ABSTRACT**

Described is a structurally modified urokinase which is biologically active over an extended time period in comparison to native urokinase. The extended activity permits the administration of lower doses of urokinase when it is used in the treatment of thromboembolic diseases. Methods of appropriately modifying the structure of urokinase are described.

7 Claims, 1 Drawing Figure

United States Patent [19]
Monji et al.
[11] **4,323,647**
[45] **Apr. 6, 1982**

[54] **STERIC HINDRANCE ENZYME IMMUNOASSAY**

[75] Inventors: **Nobuo Monji**, Miami Springs; **Albert Castro**, Miami, both of Fla.

[73] Assignee: **University of Miami**, Coral Gables, Fla.

[21] Appl. No.: **197,063**

[22] Filed: **Oct. 15, 1980**

[51] **Int. Cl.**[3] **G01W 33/54**; C12W 9/96
[52] **U.S. Cl.** ..... **435/7**; 23/230 B; 424/8; 424/12; 435/188; 435/810
[58] **Field of Search** ..... 435/5, 7, 184, 188, 435/810, 813; 424/12; 23/230 B

[56] **References Cited**

U.S. PATENT DOCUMENTS

Re. 29169	4/1977	Schuurs et al.	435/7
3,654,090	4/1972	Schuurs et al.	435/7
3,666,421	5/1972	Price	422/57
3,791,932	2/1974	Schuurs et al.	435/7
3,839,153	10/1974	Schuurs et al.	435/7
3,850,752	11/1974	Schuurs et al.	435/7
3,852,157	12/1974	Rubenstein et al.	435/7
3,875,011	4/1975	Rubenstein et al.	435/7
3,879,262	4/1975	Schuurs et al.	435/7
3,880,715	4/1975	Schneider	435/7
3,905,871	9/1975	Rubenstein et al.	435/7
3,935,074	1/1976	Rubenstein et al.	435/7
4,016,043	4/1977	Schuurs et al.	435/7
4,190,496	2/1980	Rubenstein et al.	435/7
4,203,802	5/1980	Rubenstein et al.	435/7
4,213,764	7/1980	O'Connor	23/230 B
4,233,401	11/1980	Yoshida et al.	435/810
4,273,866	6/1981	Voss et al.	435/7
4,279,992	7/1981	Bougaslaski et al.	435/7

OTHER PUBLICATIONS

Monji, et al., "Steric Hindrance Enzyme Immunoassay (SHEIA), A Novel Method in Enzyme Immunoassay", *Res. Comm. Chem. Path. Pharm*, vol. 26, No. 1, (1979), pp. 187–196.
Steers et al., "B-Galactosidase", *Methods of Enzymology*, vol. XXXIV Part B, Academic Press, N.Y. (1974), pp. 350–358.
Daughaday et al., "Methods of Separating Antibody-Bound From Free Antigen", *Principles of Competitive Protein-Binding Assays*, Odell et al., ed., J. B. Lippincott Co., Philadelphia, pp. 303–324.
Castro, et al., "Automated Radio Immunoassay of Choriomammotropin (Human Placental Lactogen)", *Clin. Chem.* vol. 22, No. 10, (1976) pp. 1655–1658.
Wisdom "Enzyme-Immunoassay", Clinical Chem. 22, 1243–1255 (1976).
Skelley, "Radioimmunoassay", Clinical Chem. 19, 146–186, (1973).
Schuurs et al., Clinical Chem. Acta 81, 1–40 (1977).
Ratcliff, "Separation Techniques in Saturation Analysis", Br. Med. Bull. 30, 32–37 (1974).
Dray et al., Biochem. Biophys. Acta. 403, 131–138 (1975).
McEwen et al., Nature 226, 263 (1970).
Vonderbaar et al., Biochem. Biophys. Acta. 176, 626 (1969).
Exley et al., FEBS Letters 79, 301–304 (1977).
Dittmar et al., Clinical Chem. 25, 227–229 (1979).
Kitagawa and Aikawa, J. Biochem. 79, 233–236 (1976).
Murphy et al., J. Clin. Endocr. 28, 343 (1968).
Murphy et al., J. Clin. Endocr. 27, 973 (1967).
Murphy et al., J. Clin. Endocr. 24, 187 (1964).
Steers et al., Methods in Enzymology 34, 350–358 (1974).
FEBS Letters 91, 162–165 (1978).
Nature 219, 168 (1968).
Page et al., J. Clin. Endocr. 28, 200 (1969).
Exley et al., Steriods 18, 593 (1971).
Rubenstein et al., "Homogenous Enzyme Immunoassay a New Immunochemical Technique", Biochem. Biophys. Research Comm. 47, 846–851 (1972).
Yalow and Berson, J. Clin. Invest. 39, 1157 (1960).

Primary Examiner—Thomas Wiseman
Attorney, Agent, or Firm—Irons and Sears

[57] **ABSTRACT**

A novel separation technique is described that is particularly useful for effecting separations in enzyme immunoassay procedures. A mixture, in an aqueous liquid vehicle, of (1), ligand-enzyme conjugate, and of (2), the conjugate bound through its ligand moiety to a receptor, is brought into contact with an insoluble, immobilized pseudo-substrate material, to which the enzyme

United States Patent [19]
Esders
[11] **4,322,496**
[45] **Mar. 30, 1982**

[54] **INHIBITION OF LACTATE OXIDASE**

[75] Inventor: **Theodore W. Esders**, Webster, N.Y.

[73] Assignee: **Eastman Kodak Company**, Rochester, N.Y.

[21] Appl. No.: **141,026**

[22] Filed: **Apr. 17, 1980**

[51] **Int. Cl.**[3] **C12Q 1/26**; C12N 9/99
[52] **U.S. Cl.** **435/25**; 435/28; 435/184; 435/190; 435/805
[58] **Field of Search** 435/4, 25, 28, 184, 435/189, 190, 805

[56] **References Cited**

U.S. PATENT DOCUMENTS

3,703,591	11/1972	Bucolo et al.	435/15
3,759,793	9/1973	Stork et al.	435/55
3,862,009	1/1975	Wahlefeld et al.	435/26
3,898,130	8/1975	Komatsu	435/19
3,956,069	5/1976	Allain et al.	435/14
4,012,287	3/1977	Carl et al.	435/26
4,166,005	8/1979	Masurekan et al.	435/190
4,237,222	12/1980	Misaki et al.	435/25
4,241,178	12/1980	Esders et al.	435/28

FOREIGN PATENT DOCUMENTS

7413057 4/1975 Netherlands .

OTHER PUBLICATIONS

Ghisla et al., "Mechanism of Inactivation of the Flavoenzyme Lactate Oxidase by Oxalate", *J. Biol. Chem.*, vol. 250, No. 2, (1975), pp. 577–584.
Ghisla et al., "Studies on the Mechanism of Action of the Flavoenzyme Lactate Oxidase", *J. Biol. Chem.*, vol. 252, No. 19, (1977), pp. 6729–6735.
Barman, *Enzyme Handbook*, vol. 1, Springer-Verlag, New York Inc., N.Y., (1969), p. 111.

Primary Examiner—Thomas Wiseman
Attorney, Agent, or Firm—J. Jeffrey Hawley

[57] **ABSTRACT**

Inhibition of lactate oxidase and an enzymatic analysis of an aqueous liquid containing lactate or lactic acid for an analyte other than lactate or lactic acid are disclosed. Undesired lactate oxidase activity, if any, in an enzymatic reagent composition, is inhibited by a lactate oxidase inhibitor selected from glyoxalic acid, oxalic acid, glycolic acid, and salts thereof. Preferred enzymatic analyses are performed in the presence of a lactate oxidase inhibitor with an enzymatic reagent composition producing hydrogen peroxide as a detectable species.

13 Claims, No Drawings

United States Patent [19]
Higgins
[11] **4,323,649**
[45] **Apr. 6, 1982**

[54] **BIOTRANSFORMATIONS USING METHANE-UTILIZING BACTERIA**

[75] Inventor: **Irving J. Higgins**, Wingham, England

[73] Assignee: **Imperial Chemical Industries Limited**, London, England

[21] Appl. No.: **125,660**

[22] Filed: **Feb. 28, 1980**

[30] **Foreign Application Priority Data**

Mar. 9, 1979 [GB] United Kingdom 08357/79

[51] **Int. Cl.**[3] **C12P 7/40**
[52] **U.S. Cl.** **435/136**; 435/42; 435/156; 435/189; 435/858
[58] **Field of Search** 435/42, 136, 146, 156, 435/166, 170, 858

[56] **References Cited**

PUBLICATIONS

Colby et al., "The Soluble Methane Mono-oxygenase of *Methylococcus capsulatus*, Biochem. J. (1977), vol. 165, pp. 395–402.
Colby et al., Proc. Soc. Gen. Microbiology, vol. 5, p. 101 (1978).

Primary Examiner—R. B. Penland
Attorney, Agent, or Firm—Cushman, Darby & Cushman

[57] **ABSTRACT**

A process for the partial degradation of complex cyclic-organic compounds such as 1-phenylheptane and m-chlorotoluene using methane-utilizing microorganisms or enzyme extracts thereof containing the enzymes methane mono-oxygenase and/or a de-halogenase. The preferred microorganism is *Methylosinus trichosporium* strain OB3b (NCIB 11131).

4 Claims, No Drawings

United States Patent [19]
Takiguchi et al.
[11] **4,321,363**
[45] **Mar. 23, 1982**

[54] **ADSORBENT FOR UROKINASE CONTAINING AGAROSE**

[75] Inventors: **Daigaku Takiguchi**, Tokyo; **Eiji Itou**, Odawara; **Hiroaki Nakamura**, Kawasaki; **Izumi Kumita**, Kanagawa, all of Japan

[73] Assignee: **Nippon Soda Company Limited**, Tokyo, Japan

[21] Appl. No.: **123,307**

[22] Filed: **Feb. 21, 1980**

[51] **Int. Cl.**[3] **C07H 5/06**
[52] **U.S. Cl.** **536/18**; 435/215; 536/1; 536/22; 536/24; 548/161; 548/222; 548/306
[58] **Field of Search** 536/1, 18, 22, 24; 548/161, 222, 306

[56] **References Cited**

U.S. PATENT DOCUMENTS

3,849,431	11/1974	Gallay et al.	548/222
4,025,622	5/1977	Ogura et al.	536/22
4,109,078	8/1978	Vorbruggen et al.	536/22
4,143,097	3/1979	Fischer et al.	548/161
4,195,128	3/1980	Hildebrand et al.	536/1

Primary Examiner—Johnnie R. Brown
Attorney, Agent, or Firm—George B. Oujevolk

[57] **ABSTRACT**

Highly pure urokinase can be produced by affinity chromatography on a novel adsorbent which comprises a water insoluble carrier and a ligand united to the carrier. The ligand is shown by the general formula

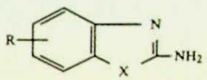

wherein X is oxygen, sulfur or imino group, and R is amino or carboxyl group.

2 Claims, No Drawings

United States Patent [19]

Thomson et al.

[11] **4,318,990**

[45] **Mar. 9, 1982**

[54] **SEPARATION OF PROTEASES FROM FLUIDS**

[75] Inventors: **Alan R. Thomson**, Abingdon; **Brynley J. Miles**, Cirencester; **John C. Caygill**, Finchley; **David J. Moore**, Shirley, all of England

[73] Assignee: **United Kingdom Atomic Energy Authority**, London, England

[21] Appl. No.: **149,900**

[22] Filed: **May 15, 1980**

Related U.S. Application Data

[63] Continuation of Ser. No. 40,124, May 18, 1979, abandoned.

[30] **Foreign Application Priority Data**

May 26, 1978 [GB] United Kingdom 23669/78

[51] **Int. Cl.**[3] **C12N 9/50**; C12N 11/14

[52] **U.S. Cl.** **435/219**; 435/176; 435/183; 435/188; 435/815

[58] **Field of Search** ..... 435/176, 188, 219, 239, 435/815, 183; 252/455 R

[56] **References Cited**

U.S. PATENT DOCUMENTS

3,095,358 6/1963 Meister ..... 435/188 X
3,293,143 12/1966 Heinicke 435/188
3,850,751 11/1974 Messing 435/176
3,943,072 3/1976 Thomson et al. ..... 252/455 R

FOREIGN PATENT DOCUMENTS

551339 3/1977 U.S.S.R. 435/815

Primary Examiner—David M. Naff
Attorney, Agent, or Firm—Larson and Taylor

[57] **ABSTRACT**

Proteases are separated from fluids by contacting a fluid with a porous inorganic material such as porous titania particles to sorb the protease and then eluting the protease from the inorganic material. Proteases which may be separated are the sulphydryl proteases including papain, stem bromelain, fruit bromelain, ficin, calotropain and mexicain. Elution of the protease may be carried out with plant juice from which protease has previously been removed. The porous inorganic material is preferably that prepared by mixing a finely divided sorptive inorganic material with a solid fugitive additive and a solvent to dissolve the fugitive, forming discrete particles from the resultant mixture and heating the particles to remove the solvent and fugitive to produce discrete particles of the inorganic material for contacting with the fluid.

3 Claims, No Drawings

United States Patent [19]

Cole

[11] **4,320,151**

[45] **Mar. 16, 1982**

[54] **ANTISTALING BAKING COMPOSITION**

[76] Inventor: **Morton S. Cole**, 2506 Ivy La., Decatur, Ill. 62521

[21] Appl. No.: **862,653**

[22] Filed: **Dec. 20, 1977**

Related U.S. Application Data

[63] Continuation-in-part of Ser. No. 693,356, Jun. 7, 1976, abandoned.

[51] **Int. Cl.**[3] **A21D 2/08**

[52] **U.S. Cl.** **426/18**; 426/20; 426/62; 426/64; 426/549; 426/551; 435/188

[58] **Field of Search** 195/68, 64, 63; 426/18, 426/20, 62, 64, 549, 551; 435/188

[56] **References Cited**

U.S. PATENT DOCUMENTS

1,274,898 8/1918 Kohman 426/20
1,855,592 4/1932 Wallerstein 195/63
3,494,770 2/1970 Amerak ..... 426/64 X
3,527,644 9/1970 Landfried ..... 426/20 X

OTHER PUBLICATIONS

Fleischmann's Part in Baking Bread, 1950, Standard Brands, Inc., New York, pp. 11, 12.
Adams, Amylases: Their Kinds and Properties and Factors Which Influence Their Activity, Food Technology, Jan. 1953, pp. 35-38.
Miller et al., A Comparison of . . . Alpha Amylases as Supplements for Breadmaking, Food Technology, Jan. 1953, pp. 38-42.
Yosumatsu et al., Stabilities of Enzymes in Polyhydric Alcohols, Agr. Biol. Chem., vol. 29, No. 7, 1965, pp. 665-671.

Primary Examiner—Joseph M. Golian

[57] **ABSTRACT**

The invention relates to products and processes for employing heat stable enzymes especially—although not exclusively—for retarding the staling of baked and leavened cereal products. A concentrated protective sugar medium is used to solubilize or disperse a fungal alpha amylase enzyme before it is incorporated in a dough. This medium protects the enzyme against thermal denaturation, thereby enabling the enzyme to remain active during baking and until the starch of the dough becomes gelatinized and subject to enzyme attack. A preferred embodiment of the dough also includes chemical emulsifiers which may be used in conjunction with the fungal alpha amylase enzyme dispersed in the concentrated sugar solution. The invention addresses the conflicting requirements that enzyme activity must continue as long as possible throughout the baking process to retard staling; however, all activity must terminate before the end of the baking process to prevent the dough from becoming a sticky mass or paste.

11 Claims, No Drawings

United States Patent [19]

Maselli et al.

[11] **4,321,324**

[45] **Mar. 23, 1982**

[54] **PROCESS FOR MAKING GLUCOSONE**

[75] Inventors: **John A. Maselli**, Wilton; **Robert O. Horwath**, Westport, both of Conn.

[73] Assignee: **Standard Brands Incorporated**, New York, N.Y.

[21] Appl. No.: **160,763**

[22] Filed: **Jun. 18, 1980**

[51] **Int. Cl.**[3] **C12P 7/26**; C12P 17/02; C12P 19/02

[52] **U.S. Cl.** **435/105**; 435/123; 435/148; 435/182; 435/190; 435/813; 435/819

[58] **Field of Search** 435/105, 148, 123, 190, 435/147, 813, 819, 182, 155, 157, 158

[56] **References Cited**

U.S. PATENT DOCUMENTS

3,911,140 10/1975 Osborne et al. ..... 435/813 X
4,102,742 7/1978 Klose et al. ..... 435/813 X
4,246,347 1/1981 Neidleman et al. 435/105
4,247,641 1/1981 Neidleman et al. ..... 435/157 X

FOREIGN PATENT DOCUMENTS

7176 1/1980 European Pat. Off.

OTHER PUBLICATIONS

Milas et al., *JACS*, 58, 1302-1304, (1936).
Milas et al., *JACS*, 59, 2345-2347, (1937).
Milas et al., *JACS*, 59, 543-544, (1937).
Milas, *JACS*, 59, 2342-2344, (1937).

Primary Examiner—Esther M. Kepplinger
Attorney, Agent, or Firm—Richard Kornutik

[57] **ABSTRACT**

Disclosed are methods of producing glucosone which comprises enzymatically oxidizing glucose with glucose-2-oxidase in a first zone and separating the concomitantly produced hydrogen peroxide from said first zone through a semi-permeable membrane into a second zone wherein an alkene is reacted with said hydrogen peroxide to form oxygenated products of said alkene, said membrane being permeable only to compounds of a molecular weight of less than about 100.

8 Claims, No Drawings

United States Patent [19]

Maselli et al.

[11] **4,321,323**

[45] **Mar. 23, 1982**

[54] **CARBOHYDRATE PROCESS**

[75] Inventors: **John A. Maselli**, Wilton; **Robert O. Horwath**, Westport, both of Conn.

[73] Assignee: **Standard Brands Incorporated**, New York, N.Y.

[21] Appl. No.: **160,758**

[22] Filed: **Jun. 18, 1980**

[51] **Int. Cl.**[3] **C12P 7/26**; C12P 19/02

[52] **U.S. Cl.** **435/105**; 435/148; 435/182; 435/190; 435/813; 435/819

[58] **Field of Search** 435/105, 72, 148, 190, 435/147, 813, 819, 182

[56] **References Cited**

U.S. PATENT DOCUMENTS

3,911,140 10/1975 Osborne et al. ..... 435/813 X
4,102,742 7/1978 Klose et al. ..... 435/813 X
4,246,347 1/1981 Neidleman et al. 435/105
4,247,641 1/1981 Neidleman et al. 435/157

OTHER PUBLICATIONS

Skoog et al., *Analytical Chemistry*, Holt, Rinehart and Winston, New York, 319, 507-509 (1965).
Sienko et al., *Chemistry: Principles and Properties*, McGraw-Hill Book Co., New York, 249-254 (1966).
Hackh's Chemical Dictionary, McGraw-Hill Book Co., New York, 571 (1969).

Primary Examiner—Esther M. Kepplinger
Attorney, Agent, or Firm—Richard Kornutik

[57] **ABSTRACT**

Disclosed are methods of producing glucosone which comprises enzymatically oxidizing glucose with glucose-2-oxidase in a first zone and separating the concomitantly produced hydrogen peroxide from said first zone through a semi-permeable membrane into a second zone, said membrane being permeable only to compounds of a molecular weight of less than about 100.

11 Claims, No Drawings

United States Patent [19]
Boguslaski et al.
[11] **4,318,980**
[45] * **Mar. 9, 1982**

[54] **HETEROGENOUS SPECIFIC BINDING ASSAY EMPLOYING A CYCLING REACTANT AS LABEL**

[75] Inventors: **Robert C. Boguslaski**, Elkhart; **Robert J. Carrico**, Bremen, both of Ind.; **James E. Christner**, Ann Arbor, Mich.

[73] Assignee: **Miles Laboratories, Inc.**, Elkhart, Ind.

[*] Notice: The portion of the term of this patent subsequent to Oct. 28, 1997, has been disclaimed.

[21] Appl. No.: **84,866**

[22] Filed: **Oct. 15, 1979**

Related U.S. Application Data

[60] Division of Ser. No. 894,838, Apr. 10, 1978, Pat. No. 4,230,797, which is a continuation of Ser. No. 667,982, Mar. 18, 1976, abandoned, which is a continuation-in-part of Ser. No. 572,008, Apr. 28, 1975, abandoned.

[51] **Int. Cl.**[3] **G01N 33/54**
[52] **U.S. Cl.** ..... **435/7**; 435/188; 435/810; 23/230 B; 424/12
[58] **Field of Search** ..... 23/230 B; 435/7, 188, 435/810; 424/8, 12

[56] **References Cited**

U.S. PATENT DOCUMENTS

3,654,090	4/1972	Schuurs et al.	435/7
3,659,104	4/1972	Gross et al. .	
3,817,837	6/1974	Rubenstein et al. .	
3,839,153	10/1974	Schuurs et al. .	
3,880,934	4/1975	Rammler .	
3,998,943	12/1976	Ullman et al. .	
4,230,797	10/1980	Boguslaski et al.	435/7

OTHER PUBLICATIONS

Miles, et al., "Labelled Antibodies and Immunological Assay Systems", *Nature*, vol. 219 (1968), pp. 186-189.
Sercarz, et al., "Antigen Binding to Cells: Determination by Enzymatic Flurogenic Group Hydrolysis", *Science*, vol. 159 (1968), pp. 884-885.

Primary Examiner—Thomas Wiseman
Attorney, Agent, or Firm—Andrew L. Klawitter

[57] **ABSTRACT**

An improved heterogenous specific binding assay method which employs a substance having reactant activity, i.e., a reactant, as a labeling substance in the detection of a ligand in a liquid medium. The method is carried out using reagent means which comprises, as its labeled constituent, a conjugate formed of a specific binding substance coupled to the reactant. The reactant advantageously is an enzymatic reactant such as an enzyme substrate or coenzyme. The activity of the conjugated reactant as a constituent of a predetermined reaction system is utilized as means for monitoring the extent of binding of the labeled constituent in conventional heterogenous specific binding assay schemes. The presence of a ligand in a liquid medium may be determined following conventional competitive binding manipulative techniques. After the necessary separation of the bound-and free-phases resulting in the specific binding reaction system, the extent of binding of the labeled constituent is determined by contacting either phase with the necessary materials to form the predetermined monitoring reaction system in which the labeling substance is active and assessing reactant activity therein.

41 Claims, No Drawings

United States Patent [19]
Hornby et al.
[11] **4,318,982**
[45] * **Mar. 9, 1982**

[54] **FMN-LABELED SPECIFIC BINDING ASSAY**

[75] Inventors: **William E. Hornby**, Berkshire; **David L. Morris**, Buckinghamshire, both of England

[73] Assignee: **Miles Laboratories, Inc.**, Elkhart, Ind.

[*] Notice: The portion of the term of this patent subsequent to Dec. 9, 1997, has been disclaimed.

[21] Appl. No.: **203,524**

[22] Filed: **Nov. 3, 1980**

Related U.S. Application Data

[60] Division of Ser. No. 45,423, Jun. 4, 1979, Pat. No. 4,238,565, which is a continuation-in-part of Ser. No. 917,961, Jun. 22, 1978, abandoned.

[51] **Int. Cl.**[3] **G01N 33/54**; C12N 9/96
[52] **U.S. Cl.** ..... **435/7**; 435/188; 435/810; 23/230 B; 424/12
[58] **Field of Search** ..... 23/230 B; 424/12; 536/7, 177, 188, 810; 435/7, 177, 188, 810; 260/112 R, 121

[56] **References Cited**

U.S. PATENT DOCUMENTS

3,879,262	4/1975	Schuurs et al.	435/7
3,935,074	1/1976	Rubenstein et al.	435/7
3,998,943	12/1976	Ullman	23/230 B
4,040,907	8/1977	Ullman et al.	435/7
4,134,792	1/1979	Boguslaski et al.	424/12
4,230,797	10/1980	Boguslaski et al.	435/7
4,235,869	11/1980	Schwarzbery	23/230 B
4,238,565	12/1980	Hornby et al.	435/7

Primary Examiner—Thomas G. Wiseman
Attorney, Agent, or Firm—Andrew L. Klawitter

[57] **ABSTRACT**

A specific binding assay for determining a ligand in a liquid medium employing an organic prosthetic group residue, such as a residue of flavin adenine dinucleotide, flavin mononucleotide, or heme, as a label component in the labeled conjugate. Preferably, the label component is the prosthetic group residue alone or is a holoenzyme residue comprising such prosthetic group residue combined with an apoenzyme in the form of a holoenzyme complex. In the former case, the label component preferably is monitored in the assay by adding an apoenzyme after the binding reaction has been initiated and measuring the resultant holoenzyme activity. In the latter case, the label component is monitored simply by measuring holoenzyme activity. The assay method may follow conventional homogeneous and heterogeneous schemes. Preferred apoenzymes for use in the assay are apoglucose oxidase and apoperoxidase. The assay offers the advantages of colorimetric read-out and of being readily adaptable to automated techniques. Also disclosed are prosthetic group-labeled and enzyme-labeled conjugates for use in the assay, as well as a method for preparing the latter conjugates.

16 Claims, No Drawings

United States Patent [19]
Hornby et al.
[11] **4,318,983**
[45] * **Mar. 9, 1982**

[54] **FAD-LABELED SPECIFIC BINDING ASSAY MONITORED WITH APOGLUTATHIONE REDUCTASE OR APOLIPOAMIDE DEHYDROGENASE**

[75] Inventors: **William E. Hornby**, Bray; **David L. Morris**, Stoke Poges, both of England

[73] Assignee: **Miles Laboratories, Inc.**, Elkhart, Ind.

[*] Notice: The portion of the term of this patent subsequent to Dec. 9, 1997, has been disclaimed.

[21] Appl. No.: **203,525**

[22] Filed: **Nov. 3, 1980**

Related U.S. Application Data

[60] Division of Ser. No. 45,423, Jun. 4, 1979, Pat. No. 4,238,565, which is a continuation-in-part of Ser. No. 917,961, Jun. 22, 1978, abandoned.

[51] **Int. Cl.**[3] **G01N 33/54**; C12N 9/96
[52] **U.S. Cl.** ..... **435/7**; 435/188; 435/810; 23/230 B; 424/12
[58] **Field of Search** ..... 23/230 B; 424/12; 536/7, 177, 188, 810; 435/7, 177, 188, 810; 260/112 R, 121

[56] **References Cited**

U.S. PATENT DOCUMENTS

3,879,262	4/1975	Schuurs et al.	435/7
4,040,907	8/1977	Ullman et al.	435/7
4,134,792	1/1979	Boguslaski et al.	424/12
4,230,797	10/1980	Boguslaski et al.	435/7
4,235,869	11/1980	Schwarzberg	23/230 B
4,238,565	12/1980	Hornby et al.	435/7

Primary Examiner—Thomas Wiseman
Attorney, Agent, or Firm—Andrew L. Klawitter

[57] **ABSTRACT**

A specific binding assay for determining a ligand in a liquid medium employing an organic prosthetic group residue, such as a residue of flavin adenine dinucleotide, flavin mononucleotide, or heme, as a label component in the labeled conjugate. Preferably, the label component is the prosthetic group residue alone or is a holoenzyme residue comprising such prosthetic group residue combined with an apoenzyme in the form of a holoenzyme complex. In the former case, the label component preferably is monitored in the assay by adding an apoenzyme after the binding reaction has been initiated and measuring the resultant holoenzyme activity. In the latter case, the label component is monitored simply by measuring holoenzyme activity. The assay method may follow conventional homogeneous and heterogeneous schemes. Preferred apoenzymes for use in the assay are apoglucose oxidase and apoperoxidase. The assay offers the advantages of colorimetric read-out and of being readily adaptable to automated techniques. Also disclosed are prosthetic group-labeled and enzyme-labeled conjugates for use in the assay, as well as a method for preparing the latter conjugates.

16 Claims, No Drawings

United States Patent [19]
Marshall
[11] **4,318,989**
[45] **Mar. 9, 1982**

[54] **STARCH-DEGRADING ENZYMES FROM *CLADOSPORIUM RESINAE***

[75] Inventor: **James J. Marshall**, Miami, Fla.

[73] Assignee: **Lifeline Products, Inc.**, Plainfield, N.J.

[21] Appl. No.: **159,949**

[22] Filed: **Jun. 16, 1980**

Related U.S. Application Data

[60] Division of Ser. No. 46,482, Jun. 7, 1979, Pat. No. 4,234,686, which is a continuation-in-part of Ser. No. 892,747, Apr. 3, 1978, Pat. No. 4,211,842.

[51] **Int. Cl.**[3] **C12N 9/34**
[52] **U.S. Cl.** **435/205**; 435/210
[58] **Field of Search** 435/205, 210

[56] **References Cited**

U.S. PATENT DOCUMENTS

3,852,495	12/1974	Schimpf	426/14
3,988,204	10/1976	Andreasen et al.	435/205 X
4,169,013	9/1979	Smith et al.	435/205

Primary Examiner—Lionel M. Shapiro
Attorney, Agent, or Firm—Cooper, Dunham, Clark, Griffin & Moran

[57] **ABSTRACT**

A culture filtrate of *Cladosporium resinae* (Strain ATCC No. 20495) has been found to contain a mixture of starch-degrading enzymes capable of bringing about efficient conversion of starch and pullulan into glucose. Culture conditions resulting in optimal production of the pullulan degrading activity been established. The amylolytic enzyme preparation obtained by culturing the fungus under these optimal conditions has been fractionated by ion-exchange and molecular sieve chromatography and shown to contain at least four enzymes, a maltase, α-amylase and two glucoamylase-type enzymes including a novel exo-pullulanase. The maltase and glucoamylase enzymes have been purified to homogeneity and their substrate specificity investigated. Both the mixture and the exo-pullulanase can be used in the manufacture of dextrose from starch. Alone or in conjunction with appropriate other starch-degrading enzymes the mixture or the exo-pullulanase may be used in the production of specific starch conversion products, including fructose syrups. Both the mixture and the exo-pullanase are useful in increasing the fermentability of high DE starch conversion products and may be useful in the production of low calorie alcoholic beverages.

2 Claims, 11 Drawing Figures

United States Patent [19]
Yagi et al.
[11] 4,317,881
[45] Mar. 2, 1982

[54] PROCESS FOR PRODUCING CYCLODEXTRINS

[75] Inventors: Yoshiaki Yagi, Fujisawa; Kageaki Kouno, Tokyo; Taiji Inui, Chigasaki, all of Japan

[73] Assignee: Sanraku-Ocean Co., Ltd., Tokyo, Japan

[21] Appl. No.: 134,255

[22] Filed: Mar. 26, 1980

[30] Foreign Application Priority Data

Apr. 7, 1979 [JP] Japan 54/42290

[51] Int. Cl.³ C12N 9/10; C12P 19/18
[52] U.S. Cl. 435/97; 435/193; 435/859
[58] Field of Search 435/97, 859, 193

[56] References Cited

U.S. PATENT DOCUMENTS

3,652,398 3/1972 Armbruster et al. 435/97
3,812,011 5/1974 Okada et al. 435/97
3,923,598 12/1975 Horikoshi 435/97
3,988,206 10/1976 Shiosaka ..... 435/97 X
4,135,977 1/1979 Horikoshi et al. 435/97

Primary Examiner—Esther M. Kepplinger
Attorney, Agent, or Firm—Jordan and Hamburg

[57] ABSTRACT

A process for producing cyclodextrins which comprises using cultured medium of the strains belonging to genus Micrococcus, filtrate thereof or enzyme preparation obtained therefrom, especially, the process in which the ratio of α-cyclodextrin to β-cyclodextrin can be desirably varied by regulating the condition of the reaction mixture, is disclosed.

8 Claims, 6 Drawing Figures

United States Patent [19]
Horiguchi et al.
[11] 4,317,882
[45] Mar. 2, 1982

[54] PRODUCTION OF PLASMINOGEN ACTIVATOR

[75] Inventors: Sadayuki Horiguchi; Akio Hasegawa, both of Fuji; Mitsuru Shibukawa, Yokohama, all of Japan

[73] Assignee: Asahi Kasei Kogyo Kabushiki Kaisha, Osaka, Japan

[21] Appl. No.: 143,680

[22] Filed: Apr. 25, 1980

[30] Foreign Application Priority Data

Apr. 26, 1979 [JP] Japan 54-50819
Oct. 12, 1979 [JP] Japan 54-131543

[51] Int. Cl.³ C12N 9/48
[52] U.S. Cl. 435/212; 435/215; 435/240; 435/818
[58] Field of Search 435/212, 215, 240

[56] References Cited

U.S. PATENT DOCUMENTS

3,873,423 3/1975 Munder 435/3
3,930,944 1/1976 Nicol 435/215

Primary Examiner—Lionel M. Shapiro
Attorney, Agent, or Firm—Sughrue, Mion, Zinn, Macpeak and Seas

[57] ABSTRACT

A plasminogen activator having a molecular weight of 45,000 to 68,000 is formed as a single fraction in the cells of human kidney or lung, and is separated and recovered with good efficiency without reducing its molecular weight. The pH of a solution to be contacted with said cells and the concentration of dissolved oxygen should be maintained within suitable ranges in order to form the plasminogen activator having a molecular weight of 45,000 to 68,000 as a single fraction. Furthermore, by properly adjusting the residence time of the solution with the cells, the activator can be formed over a long period of more than 40 days. To separate the activator, the pH of the solution in the separating step is maintained preferably at 4 to 12. By causing a metal chelating agent to be present in the solution in the separating step, the plasminogen activator can be obtained without reducing its molecular weight.

10 Claims, 5 Drawing Figures

United States Patent [19]
Popov et al.
[11] 4,317,883
[45] Mar. 2, 1982

[54] METHOD FOR OBTAINING OF GLUCOSE ISOMERASE

[75] Inventors: Mitko S. Popov; Galina M. Djedjeva; Ivan O. Todorov; Nelly S. Stoeva, all of Sofia, Bulgaria

[73] Assignee: Institute Po Microbiologia, Sofia, Bulgaria

[21] Appl. No.: 212,627

[22] Filed: Dec. 3, 1980

[51] Int. Cl.³ C12N 9/92
[52] U.S. Cl. 435/234; 435/886
[58] Field of Search 435/234

[56] References Cited

U.S. PATENT DOCUMENTS

3,826,714 7/1974 Suekane et al. ..... 435/234 X
3,956,066 5/1976 Coker et al. ..... 435/234 X
3,979,261 9/1976 Outtrup 435/234
4,061,539 12/1977 Lee ..... 435/234 X
4,255,521 3/1981 Hirohara et al. 435/234
4,283,496 8/1981 Lee 435/253

Primary Examiner—Lionel M. Shapiro
Attorney, Agent, or Firm—Karl F. Ross

[57] ABSTRACT

A method for producing glucose isomerase comprising the steps of cultivating the enzyme producing strain Streptomyces sp. 1339 registration N. 144 Bulgarian State Institute for Drug Control, for 36 to 72 hours in a culture medium with xylose as an indicator, the temperature being kept at 24° to 36° C., the initial pH of cultivation being from 6.5 to 9.0 and effective isomerization at a temperature of 50° to 80° C., and a pH of 6.0 to 9.0 in the presence of 1×10^{-4}M $CoCl_2.6H_2O$ 1×10^{-2}M $MgSO_4.7H_2O$ in 0.1 to 3 M of the substrate.

2 Claims, No Drawings

United States Patent [19]
Khanna et al.
[11] 4,318,846
[45] Mar. 9, 1982

[54] NOVEL ETHER SUBSTITUTED FLUORESCEIN POLYAMINO ACID COMPOUNDS AS FLUORESCERS AND QUENCHERS

[75] Inventors: Pyare Khanna, Mountain View; Edwin F. Ullman, Atherton, both of Calif.

[73] Assignee: Syva Company, Palo Alto, Calif.

[21] Appl. No.: 73,163

[22] Filed: Sep. 7, 1979

[51] Int. Cl.³ A61K 39/385; A61K 39/44; C07G 7/00
[52] U.S. Cl. ..... 260/112 B; 23/230 B; 260/112 R; 260/112.5 R; 260/112.7; 260/121; 424/8; 424/12; 424/85; 424/88; 435/7; 435/188; 525/420; 260/335
[58] Field of Search ..... 260/112 R, 112 B, 121; 424/85, 88; 525/420; 435/188

[56] References Cited

U.S. PATENT DOCUMENTS

4,174,384 12/1979 Ullman et al. ..... 260/112 B
4,220,450 9/1980 Maggio ..... 435/7 X
4,220,722 9/1980 Rowley et al. ..... 435/7 X

Primary Examiner—Howard E. Schain
Attorney, Agent, or Firm—Bertram I. Rowland

[57] ABSTRACT

Diether symmetrically substituted fluoresceins are provided having at least one anionic group and a linking functionality. Depending upon the site of substitution, the compounds can be used as fluorescers absorbing at wavelengths in excess of 500 nm or as quenchers, absorbing at wavelengths in excess of 500 nm and exhibiting substantially no fluorescence. The compounds find wide application, particularly as labels in fluorescent immunoassays.

22 Claims, No Drawings

United States Patent [19]
Arimura et al.
[11] **4,313,938**
[45] **Feb. 2, 1982**

[54] **INTERFERON INDUCER AND METHOD OF PREPARING SAME**

[75] Inventors: **Hirofumi Arimura**, Toyonaka; **Masanori Nagai**, Kyoto; **Takeshi Yamauchi**, Osaka; **Tsutomu Kitagawa**, Neyagawa; **Tadakazu Suyama**, Kyoto, all of Japan

[73] Assignee: **The Green Cross Corporation**, Osaka, Japan

[21] Appl. No.: **58,361**

[22] Filed: **Jul. 18, 1979**

[30] **Foreign Application Priority Data**

Jul. 28, 1978 [JP] Japan 53/92212

[51] **Int. Cl.**[3] **A01N 9/00**; C12P 19/34
[52] **U.S. Cl.** **424/180**; 424/85; 435/91; 435/194; 435/815; 435/816; 536/28; 435/948
[58] **Field of Search** 435/91, 92; 536/27, 536/28; 424/85, 200, 180

[56] **References Cited**

U.S. PATENT DOCUMENTS

3,819,482 6/1974 Vidaver et al. 435/91
4,082,613 4/1978 Thirumalachar et al. 435/172

OTHER PUBLICATIONS

Microbiology, Davis et al., Harper & Rowe, Publishers, pp. 1398–1405 (1968).
Methods in Enzymology, vol. XXX, Part F, Moldave et al., pp. 654–661 (1974).

Primary Examiner—Alvin E. Tanenholtz
Attorney, Agent, or Firm—Cushman, Darby & Cushman

[57] **ABSTRACT**

Double-stranded RNA synthesized using native human DNA as template is found to be an excellent interferon inducer with low toxicity in spite of homologous native to host cell. It is produced by reacting ATP, GTP, CTP and UTP with one another in the presence of a native human DNA as template by the catalytic action of an active RNA polymerase to form RNA and subjecting the resulting RNA to annealing by heating it at a temperature of 70° to 100° C. and gradually cooling to room temperature or below to form double-stranded regions between their molecules.

4 Claims, 4 Drawing Figures

United States Patent [19]
Maurer
[11] **4,315,002**
[45] **Feb. 9, 1982**

[54] **SOLID PHARMACEUTICAL OR DIAGNOSTIC AGENT CONTAINING DEXTRAN AND ITS PREPARATION**

[75] Inventor: **Robert Maurer**, Wattenheim, Fed. Rep. of Germany

[73] Assignee: **BASF Aktiengesellschaft**, Fed. Rep. of Germany

[21] Appl. No.: **154,896**

[22] Filed: **May 30, 1980**

[30] **Foreign Application Priority Data**

Jun. 21, 1979 [DE] Fed. Rep. of Germany 2925009

[51] **Int. Cl.**[3] **A61K 31/71**; A61K 37/48; C12N 9/00
[52] **U.S. Cl.** **424/181**; 424/94; 424/227; 424/271; 424/330; 435/183; 435/188; 435/191; 435/215; 435/216; 435/217; 435/219
[58] **Field of Search** 424/94, 180, 181, 361, 424/227, 271, 330; 264/28; 435/188, 187, 183, 191, 215, 216, 217, 219

[56] **References Cited**

U.S. PATENT DOCUMENTS

3,655,838 4/1972 Price et al. 264/28
4,134,943 1/1979 Knitsch et al. 264/28

OTHER PUBLICATIONS

Kengo-Chem. Abst., vol. 87 (1977), p. 65,650r.
Briggs et al.-Chem. Abst., vol. 76 (1972), p. 131,492d.
Murakami et al.-Chem. Abst., vol. 83, (1975), p. 136,908y.
Okazaki et al.-Chem. Abst., vol. 87, (1977), p. 106,748m.
Okazaki et al.-Chem. Abst., vol. 86, (1977), p. 127,281y.

Primary Examiner—Sam Rosen
Attorney, Agent, or Firm—Keil & Witherspoon

[57] **ABSTRACT**

A process for the preparation of a solid pharmaceutical or diagnostic composition in which the active substance and dextran are dissolved in water, the solution is placed in a mold and is thereafter lyophilized to form a solid abrasion-resistant tablet which can further be compressed to reduce its rate of disintegration in water. The invention is also directed to the pharmaceutical or diagnostic agent produced by this process.

7 Claims, No Drawings

United States Patent [19]
Miwa et al.
[11] **4,315,988**
[45] **Feb. 16, 1982**

[54] **THERMOPHILIC COLLAGENASES, THERMOPHILIC BACTERIA CAPABLE OF PRODUCING THERMOPHILIC COLLAGENASES, AND PROCESS FOR PRODUCING SAID COLLAGENASES**

[75] Inventors: **Naoto Miwa**, Ami; **Yoshiro Masuda**, Kashiwa; **Seiichi Kawarabuki**; **Toshiyuki Sai**, both of Ami; **Takao Saito**, Tsuchiura, all of Japan

[73] Assignee: **Mitsubishi Petrochemical Co., Ltd.**, Tokyo, Japan

[21] Appl. No.: **25,748**

[22] Filed: **Mar. 30, 1979**

[30] **Foreign Application Priority Data**

Mar. 30, 1978 [JP] Japan 53-36018

[51] **Int. Cl.**[3] **C12N 9/54**; C12N 1/20
[52] **U.S. Cl.** **435/221**; 435/832; 435/253
[58] **Field of Search** 435/219–222, 435/253

[56] **References Cited**

U.S. PATENT DOCUMENTS

3,267,006 8/1966 Hakim et al. 435/226

OTHER PUBLICATIONS

Chemical Abstracts, vol. 87, 1977: 197039v.
Chemical Abstracts, vol. 92, 1980: 54005y.
Biochim. Biophys. Acta, vol. 122 (1966), pp. 557–559.
Biochemistry, vol. 3, No. 11, 1964, pp. 1737–1741.

Primary Examiner—Lionel M. Shapiro
Attorney, Agent, or Firm—Wenderoth, Lind & Ponack

[57] **ABSTRACT**

This invention relates to a process for producing collagenase, which comprises aerobically cultivating a collagenase-producing bacterium belonging to the genus Bacillus, and recovering collagenase from the culture broth.

This invention also provides a thermophilic bacterium of the genus Bacillus which has the ability to produce collagenase and which grows at a temperature of 42° to 74° C. and a pH of 5.0 to 9.0 and a novel thermophilic collagenase which does not substantially lose collagenase activity even when maintained for 1 hour at a temperature of 60° C. in the presence of a calcium ion at a pH in the range of 6.5 to 8.5, and which has a molecular weight, determined by gel filtration, between those of cytochrome C and ovalbumin.

14 Claims, 7 Drawing Figures

United States Patent [19]
Abbott et al.
[11] **4,316,955**
[45] **Feb. 23, 1982**

[54] **ENZYMATIC DEESTERIFICATION OF CEPHALOSPORIN METHYL ESTERS**

[75] Inventors: **Bernard J. Abbott**; **Dennis R. Berry**, both of Greenwood, Ind.

[73] Assignee: **Eli Lilly and Company**, Indianapolis, Ind.

[21] Appl. No.: **205,538**

[22] Filed: **Nov. 10, 1980**

[51] **Int. Cl.**[3] **C12P 35/00**; C12N 9/18
[52] **U.S. Cl.** **435/47**; 435/197; 435/253; 435/886
[58] **Field of Search** 435/47, 197, 886, 253

[56] **References Cited**

U.S. PATENT DOCUMENTS

3,749,641 7/1973 Takahashi et al. 435/51
3,761,356 9/1973 Daniels 435/197

OTHER PUBLICATIONS

Abbott et al., Applied Microbiology, vol. 30, No. 3 pp. 413–419 (Sep. 1975).
Brannon et al., The Journal of Antibiotics, vol. 24, No. 2 pp. 121–124 (Feb. 1976).

Primary Examiner—Lionel M. Shapiro
Attorney, Agent, or Firm—Joseph A. Jones; Arthur R. Whale

[57] **ABSTRACT**

The microorganism *Streptomyces capillispira*, NRRL 12279, produces an enzyme which deesterifies cephalosporin methyl esters.

20 Claims, No Drawings

United States Patent [19]
Leiser
[11] **4,310,628**
[45] **Jan. 12, 1982**

[54] **FRUCTOSE PRODUCTION**

[75] Inventor: **Roger S. Leiser**, Decatur, Ill.
[73] Assignee: **A. E. Staley Manufacturing Company**, Decatur, Ill.

[21] Appl. No.: **130,276**
[22] Filed: **Mar. 14, 1980**

Related U.S. Application Data

[63] Continuation of Ser. No. 662,199, Feb. 26, 1976, abandoned.

[51] **Int. Cl.**[3] **C12P 19/24**; C12N 9/92
[52] **U.S. Cl.** **435/94**; 435/234; 435/813
[58] **Field of Search** 435/94, 188, 234, 813, 435/174, 177, 179, 180, 181

[56] **References Cited**

U.S. PATENT DOCUMENTS

3,847,741	11/1974	Heady et al.	435/94
3,979,261	9/1976	Outtrup	435/94
4,025,389	5/1977	Poulsen et al.	435/94

OTHER PUBLICATIONS

Yoshimura et al., "Studies on D-Glucose Isomerizing Activity of D-Xylose Grown Cells from *Bacillus coagulans*, Strain HN-68" *Agr. Biol. Chem.*, vol. 30, No. 10, (1966), pp. 1015-1023.
Danno, "Studies on D-Glucose-Isomerizing Enzyme from *Bacillus Coagulans*, Strain HN-68", *Agr. Biol. Chem.*, vol. 34, No. 12 (1970), pp. 1805-1814.
Dixon et al., *Enzymes*, Academic Press Inc., New York, (1964), pp. 116-119 and 144-151.
Zittan et al., "Sweetzyme—A New Immobilized Glucose Isomerase", *Die Starke*, vol. 27, No. 7, (1975), pp. 236-241.

Primary Examiner—Thomas Wiseman
Attorney, Agent, or Firm—M. Paul Hendrickson; Charles J. Meyerson

[57] **ABSTRACT**

Fructose productivity and isomerase activity in immobilized beds or column operations employing isomerases obtained from Bacillus organisms are significantly improved by isomerizing a high solids feed syrup at pH 7.0-7.5 and 55° C. to 60° C. Without adding cobalt to the feed streams, continuous column operation in excess of 4,000 hours and yielding greater than 3,500 pounds of a 42% fructose syrup for each pound of isomerase can be achieved.

11 Claims, No Drawings

United States Patent [19]
Bernstein
[11] **4,311,791**
[45] **Jan. 19, 1982**

[54] **AUTOMATED KINETIC DETERMINATION OF LACTATE DEHYDROGENASE ISOENZYMES IN SERUM**

[76] Inventor: **Larry H. Bernstein**, 2800 Gaslight La., East, Mobile, Ala. 36609

[21] Appl. No.: **158,121**
[22] Filed: **Jun. 10, 1980**

Related U.S. Application Data

[63] Continuation of Ser. No. 912,745, Jun. 5, 1978, abandoned.

[51] **Int. Cl.**[3] **C12Q 1/32**
[52] **U.S. Cl.** **435/26**; 435/184
[58] **Field of Search** 435/26, 805, 810, 184

[56] **References Cited**

U.S. PATENT DOCUMENTS

3,862,010	1/1975	Rush et al.	435/26
4,003,795	1/1977	Lamprecht	435/26

OTHER PUBLICATIONS

Wilkinson, *Diagnostic Enzymology*, Edward Arnold Publishers, Ltd., London, (1976), pp. 46-54.
Bergmeyer, et al., *Methods of Enzymatic Analysis*, vol. 2, Academic Press Inc., N.Y. (1974), pp. 574-578, 603-612.
Cabaud, et al. "Colorimetric Measurement of Lactic Dehydrogenase Activity of Body Fluids," *Am. J. Clin. Path.*, vol. 30, No. 3, (1958), pp. 234-236.
Howell, et al. "Lactate-to-Pyrauate or Pyrauate-to--Lactate Assay for Lactate Dehydrogenase; A Re-examination," *Clin. Chem.*, vol. 25, No. 2, (1979), pp. 269-272.
Plagemann, et al, "The Electrophoreticlly Distinct Forms of Mammalian Lactic Dehydrogenase," *J. Biol. Chem.*, vol. 235, No. 8, (1960), pp. 2288-2293.

Primary Examiner—Thomas Wiseman

[57] **ABSTRACT**

A diagnostic method is disclosed, based on the automated kinetic determination of LDH and MDH isoenzymes in serum, which utilizes the comparison of two rates of LDH and MDH activity at different concentrations of substrate. A step is eliminated from the procedure previously proposed, significantly improving the method. The method is based on the principle that the pure and hybrid forms of LDH and MDH isoenzymes differ in their affinities for and are inhibited to different extends by their substrate.

2 Claims, No Drawings

United States Patent [19]
Vlachakis
[11] **4,311,790**
[45] **Jan. 19, 1982**

[54] **RADIOENZYMATIC METHOD FOR ASSAYING 3,4-DIHYDROXYPHENYLGLYCOL**

[75] Inventor: **Nicholas D. Vlachakis**, Altadena, Calif.
[73] Assignee: **The University of Southern California**, Los Angeles, Calif.

[21] Appl. No.: **55,582**
[22] Filed: **Jul. 9, 1979**

[51] **Int. Cl.**[3] **G01N 33/48**; C12N 9/10
[52] **U.S. Cl.** ..... **435/15**; 23/230 B; 424/1; 435/193
[58] **Field of Search** ..... 23/230 B; 424/1, 1.5, 424/12; 435/7, 4, 15, 193, 810

[56] **References Cited**

U.S. PATENT DOCUMENTS

4,242,456	12/1980	Johnson et al.	435/193

OTHER PUBLICATIONS

Peuler et al., Life Sciences, vol. 21, 1977, pp. 625-636.
Saller et al., Life Sciences, vol. 23, 1978, pp. 1117-1130.
Martin et al., Chem. Abstracts, vol. 90, Apr. 9, 1979, Abstract No. 117415p.
Eriksson et al., Chem. Abstracts, vol. 88, Mar. 13, 1978, Abstract No. 71119y.

Primary Examiner—Benjamin R. Padgett
Assistant Examiner—Christine M. Nucker
Attorney, Agent, or Firm—Nilsson, Robbins, Dalgarn, Berliner, Carson & Wurst

[57] **ABSTRACT**

A method for assaying 3,4-dihydroxyphenylglycol in a sample containing other catechol compounds by forming tritiated O-methylated derivatives, extracting tritiated 3-methoxy-4-hydroxyphenylglycol at a pH of 5 or lower, isolating the tritiated 3-methoxy-4-hydroxyphenylglycol and measuring its radioactivity. Prior to measurement, the tritiated 3-methoxy-4-hydroxyphenylglycol can be oxidized to tritiated vanillin which is extracted into the counting solution to increase specificity of the assay.

11 Claims, No Drawings

United States Patent [19]
Iwasa et al.
[11] **4,312,943**
[45] **Jan. 26, 1982**

[54] **METHOD FOR ENZYME IMMUNOASSAY OF PANCREATIC GLUCAGON**

[75] Inventors: **Susumu Iwasa**, Kyoto; **Hayao Ueno**, Osaka; **Mitsuhiro Wakimasu**, Takarazuka, all of Japan
[73] Assignee: **Takeda Chemical Industries, Ltd.**, Osaka, Japan

[21] Appl. No.: **69,180**
[22] Filed: **Aug. 24, 1979**

[30] **Foreign Application Priority Data**

Aug. 30, 1978 [JP] Japan 53/106828

[51] **Int. Cl.**[3] **G01N 33/54**; C12N 9/96
[52] **U.S. Cl.** ..... **435/7**; 435/188; 23/230 B; 424/8; 424/12; 260/112.5 R
[58] **Field of Search** ..... 435/7, 177, 188, 810; 424/1, 1.5, 12, 8; 23/230 B; 260/112.5

[56] **References Cited**

U.S. PATENT DOCUMENTS

3,975,342	8/1976	Gross	260/121
4,075,194	2/1978	Sela et al.	260/112.5
4,218,539	8/1980	Weltman	424/12
4,220,722	9/1980	Rowley et al.	435/7
4,221,777	9/1980	Nishino	260/121

OTHER PUBLICATIONS

Iwasa et al., "Enzyme Immunoassay of Pancreatic Glucagon at the Picogram Level Using B-D-Galactosudase as a Label", *Chem. Abstracts*, vol. 91, No. 25, (1979), p. 292, Abs. No. 206823h.
Schenck, "Production and Characterization of an Antiserum Against Pancreatic Glucagon", *Clin. Chim. Acta.*, vol. 80, No. 3, (1977), pp. 455-463.
Ogawa et al., "Studies on Peptides, LXXVII, Synthesis of the Protected Heptadecapeptide Corresponding to Positions 13-29 of Avian Glucagon (Duck)," *Chem. Abstracts*, vol. 89, No. 21, (1978), p. 644, Abs. No. 180345k.
Imagawa et al., "Production of Anti-Glucagon Serums with a C-terminal Fragment of Pancreatic Glucagon", *Chem. Abstracts*, vol. 90, No. 23, (1979), p. 472, Abs. No. 184634x.
Ogawa et al., "Studies on Peptides LXXVII, Synthesis of the Protected Heptadecapeptide Corresponding to Positions 13-29 of Avian Glucagon (Duck)", *Chem. Pharm. Bull.*, vol. 26, No. 5, (1978), pp. 1540-1548.
Wakimasu et al., "Synthesis of the Nonacosapeptide Corresponding to the Proposed Amino Acid Sequence of Turkey Glucagon", *Chem. Absts.*, vol. 89, No. 21, (1978), p. 644, Abst. No. 180344j.
Iwasa et al., "Enzyme Immunoassay of Pancreatic Glucagon at the Picgram Level Using B-D-Galactosudase as a Label", *J. Biochem.*, vol. 86, (1979), pp. 943-949.
Imagawa et al., "Production of Anti-Glucagon Sera with a C-Terminal Fragment of Pancreatic Glucagon", *Endocrinol Japan*, vol. 26, (1979), pp. 123-131.

Primary Examiner—Thomas G. Wiseman
Attorney, Agent, or Firm—Wegner & Bretschneider

[57] **ABSTRACT**

A novel peptide-enzyme conjugate obtained by coupling a labeling enzyme with a peptide of the general formula:

$$H\text{-}R_1\text{-}Phe\text{-}Val\text{-}Gln\text{-}Trp\text{-}Leu\text{-}R_2\text{-}Asn\text{-}Thr\text{-}OH$$

(wherein R_1 is a peptide fragment consisting of 1 to 10 amino acid residues in the sequence of and including the Asp in 10-position of

$$\beta\text{-}\overset{1}{Ala}\text{-}\overset{2}{Tyr}\text{-}\overset{3}{Leu}\text{-}\overset{4}{Asp}\text{-}\overset{5}{Ser}\text{-}\overset{6}{Arg}\text{-}\overset{7}{Arg}\text{-}\overset{8}{Ala}\text{-}Gln\text{-}Asp;$$

and R_2 is Met or Nle) is useful for a method for enzyme immunoassay of pancreatic glucagon.

20 Claims, 6 Drawing Figures

United States Patent [19]
Lauderdale
[11] **4,309,502**
[45] **Jan. 5, 1982**

[54] **ENZYMATIC ASSAY FOR GLYCEROL AND TRIGLYCERIDES AND A REAGENT FOR USE THEREIN**

[75] Inventor: **Vivian R. Lauderdale**, Encinitas, Calif.

[73] Assignee: **Beckman Instruments, Inc.**, Fullerton, Calif.

[21] Appl. No.: **164,720**

[22] Filed: **Jun. 30, 1980**

[51] **Int. Cl.**[3] **C12Q 1/48**; C12Q 1/44
[52] **U.S. Cl.** **435/15**; 435/19; 435/26; 435/198; 435/810; 435/884
[58] **Field of Search** 435/4, 11, 15, 19, 26, 435/198, 810, 884

[56] **References Cited**

U.S. PATENT DOCUMENTS

3,513,073	5/1970	Mauvernay et al.	435/198
3,703,591	11/1972	Bucolo et al.	435/15
3,759,793	9/1973	Stork et al.	435/15
3,862,009	1/1975	Wahlefeld et al.	435/15
3,898,130	8/1975	Komatsu	435/19
4,001,089	1/1977	Stavropoulos et al.	23/230 B
4,011,045	3/1977	Bonderman	23/230 B
4,038,146	7/1977	Nonaka et al.	435/15
4,045,297	8/1977	Weeks et al.	435/15
4,056,442	11/1977	Huang et al.	435/198
4,066,508	1/1978	Rauschee et al.	435/15

FOREIGN PATENT DOCUMENTS

2065556	4/1974	Fed. Rep. of Germany .	
2000127	12/1974	Fed. Rep. of Germany .	
1441642	7/1976	United Kingdom	435/15

OTHER PUBLICATIONS

Frederickson et al., *New Eng. J. Med.*, 276:34, 1967.
Eggstein et al., *Kln. Wschr.*, 44:262,267, 1966.
Bucolo et al., *Clin. Chem.*, 19:476, 1963.
Wahlefeld, *Methods of Enzymatic Analysis*, H. U. Bergmeyer, ed. p. 1831, Academic Press, N.Y., 1974.
Pinter et al., *Arch. Biochem. Biophys.*, 121:404 1966.

Primary Examiner—Peter A. Hruskoci
Attorney, Agent, or Firm—R. J. Steinmeyer; J. E. Vanderburgh; Robert S. Frieman

[57] **ABSTRACT**

An assay which is capable of determining the endogenous glycerol and endogenous triglycerides content of a sample without the necessity of performing a separate glycerol assay. The assay of the instant invention can be performed in a single cuvette and is made possible by the use of a novel reagent kit.

The reagent kit is of the type comprising lipase; glycerol kinase; adenosine triphosphate; and at least one reagent capable of being used to assay glycerol-1-phosphate or adenosine diphosphate. This reagent kit is characterized in that the lipase employed therein is from *Staphylococcus epidermidis* NRRL B-12072. In the absence of an auxiliary agent, this lipase does not cleave triglycerides to glycerol. Accordingly, the reagent kit further comprises, as the auxiliary agent, a surfactant which is capable of activating the lipase. Because these surfactants do not absorb at either 340 or 520 nm, one can determine a sample's endogenous glycerol content and endogenous triglycerides content in a single cuvette.

19 Claims, 4 Drawing Figures

United States Patent [19]
Smith et al.
[11] **4,309,505**
[45] **Jan. 5, 1982**

[54] **PROCESS FOR THE PRODUCTION OF FRUCTOSE TRANSFERASE ENZYME**

[75] Inventors: **Jay A. Smith**, Downers Grove; **Susan J. Luenser**, LaGrange Park, both of Ill.

[73] Assignee: **CPC International Inc.**, Englewood Cliffs, N.J.

[21] Appl. No.: **150,843**

[22] Filed: **May 19, 1980**

[51] **Int. Cl.**[3] **C12N 9/10**
[52] **U.S. Cl.** **435/193**; 435/255; 435/911
[58] **Field of Search** 435/193, 911, 255

[56] **References Cited**

U.S. PATENT DOCUMENTS

4,276,379	6/1981	Heady	435/193 X

Primary Examiner—Lionel M. Shapiro
Attorney, Agent, or Firm—Stanley M. Parmerter

[57] **ABSTRACT**

An improved process for obtaining fructosyl transferase enzyme from the yeast *Aureobasidium pullulans*. Prior purification process steps are eliminated by use of conditions which do not produce black pigments and viscous polysaccharides.

9 Claims, No Drawings

United States Patent [19]
Modrovich
[11] **4,310,625**
[45] **Jan. 12, 1982**

[54] **STABILIZED LIQUID ENZYME COMPOSITIONS FOR DIAGNOSTIC DETERMINATIONS**

[76] Inventor: **Ivan E. Modrovich**, 591 Beverly Dr., Camarillo, Calif. 93010

[21] Appl. No.: **898,704**

[22] Filed: **Apr. 24, 1978**

Related U.S. Application Data

[63] Continuation of Ser. No. 667,856, Mar. 17, 1976, abandoned.

[51] **Int. Cl.**[3] **C12Q 1/32**; C12Q 1/50; C12Q 1/52; C12N 9/96
[52] **U.S. Cl.** **435/15**; 435/14; 435/16; 435/17; 435/26; 435/188; 435/190; 435/194
[58] **Field of Search** ..... 195/63, 68, 99, 163.5 R; 435/16, 26, 188, 190, 194, 14, 15, 17

[56] **References Cited**

U.S. PATENT DOCUMENTS

3,557,002	1/1971	McCarty	195/63 X
3,627,688	12/1971	McCarty et al.	195/63 X
3,764,478	10/1973	Bergmeyer et al.	195/99
3,819,528	6/1974	Berry	195/63 X

OTHER PUBLICATIONS

George, et al. Stabilization of Lactate and Malete Dehydrogenase by Organic Solvents Biochim. Biophys. Acta. vol. 191, 1969 (pp. 466–468).

Primary Examiner—David M. Naff
Attorney, Agent, or Firm—Robert J. Schaap

[57] **ABSTRACT**

Labile enzymes for use in biological diagnostic determinations are stabilized for long terms by forming a solution of the enzyme in an aqueous media containing at least 20% organic solvent such as 30% aqueous propane diol in the presence of a small amount of polymer such as 0.1% gelatin and then diluting the media at least 20 times with water while maintaining the polymer concentration at least 0.01%. The resultant liquid enzyme composition can be stored for extended periods without loss of significant enzyme catalytic activity. Stability is further enhanced by including from 1 to 18% of salts and 0.1% bacteriastatic agents in the liquid enzyme composition. The liquid enzyme composition enzyme can further contain an enzyme substrate and buffer salts.

26 Claims, No Drawings

United States Patent [19]
Burkhardt et al.
[11] **4,310,626**
[45] **Jan. 12, 1982**

[54] **INTERFERENCE-RESISTANT COMPOSITION, DEVICE AND METHOD FOR DETERMINING A PEROXIDATIVELY ACTIVE SUBSTANCE IN A TEST SAMPLE**

[75] Inventors: **Alan E. Burkhardt**, Elkhart, Ind.; **Ann M. Tideman**, Edwardsburg, Mich.

[73] Assignee: **Miles Laboratories, Inc.**, Elkhart, Ind.

[21] Appl. No.: **155,318**

[22] Filed: **Jun. 2, 1980**

[51] **Int. Cl.**[3] **C12Q 1/28**
[52] **U.S. Cl.** ..... **435/28**; 435/188; 435/805; 23/230 B; 23/931; 252/408
[58] **Field of Search** ..... 435/28, 14, 188, 805; 23/230 B, 931; 252/408 R

[56] **References Cited**

U.S. PATENT DOCUMENTS

T978,003	1/1979	Wu et al.	435/28
3,411,887	11/1968	Ku	23/230 B
3,770,381	11/1973	Schmitt	435/28
4,017,261	4/1977	Svoboda et al.	435/28
4,168,205	9/1979	Danninger et al.	435/28
4,228,240	10/1980	Dawson et al.	435/188

OTHER PUBLICATIONS

Iwasaki T., *Journal of the Chemical Society of Japan*, 63, pp. 820–826 (1942).
I. M. Reibel, "Decomposition of Hydrogen Peroxide Solutions in the Presence of Trivalent Cobalt Complex Compounds", Khim. Perekismykh Soedin. Akad. Nauk SSS Inst. Okis. i Neorgan Khim., (1963) pp. 68–79.
"The Merck Index", Ninth Edition, Merck & Co. Inc., Rahway, (1976), p. 311.

Primary Examiner—Benoît Castel
Attorney, Agent, or Firm—Edward H. Gorman, Jr.

[57] **ABSTRACT**

A composition, test device and method of use in determining the presence of a peroxidatively active component in a test sample are disclosed. The composition comprises an organic peroxide, an indicator capable of providing a detectable response in the presence of the peroxide and a peroxidatively active substance, and a complex of Co(III). Inclusion of the Co(III) complex renders the composition resistant to the adverse effects of ascorbate, which might be present in the test sample. The test device comprises a carrier matrix incorporated with the composition. The method comprises contacting the test sample with the device and observing a detectable response therein.

23 Claims, No Drawings

United States Patent [19]
Modrovich
[11] **4,310,624**
[45] * **Jan. 12, 1982**

[54] **STABILIZED LIQUID COENZYME COMPOSITIONS FOR DIAGNOSTIC DETERMINATIONS**

[76] Inventor: **Ivan E. Modrovich**, 1043 Mesa Dr., Camarillo, Calif. 93010

[*] Notice: The portion of the term of this patent subsequent to May 8, 1996, has been disclaimed.

[21] Appl. No.: **775,833**

[22] Filed: **Mar. 9, 1977**

Related U.S. Application Data

[63] Continuation-in-part of Ser. No. 764,826, Feb. 2, 1977, Pat. No. 4,153,511, which is a continuation of Ser. No. 667,857, Mar. 17, 1976, abandoned.

[51] **Int. Cl.**³ **C12Q 1/00**; C12Q 1/32; C12Q 1/48; C12N 9/00

[52] **U.S. Cl.** **435/4**; 435/14; 435/16; 435/17; 435/26; 435/183

[58] **Field of Search** ..... 195/99, 101, 103.5 R; 536/28; 435/4, 14, 15, 16, 17, 26, 188, 183

[56] **References Cited**

U.S. PATENT DOCUMENTS

2,882,244 4/1959 Milton ..... 252/455 Z
3,776,900 12/1973 Hammer 536/28
3,819,487 6/1974 Bernt et al. ..... 195/103.5 R

FOREIGN PATENT DOCUMENTS

2615958 12/1976 Fed. Rep. of Germany .

OTHER PUBLICATIONS

George et al., Biochim. Biophys. Acta. 191 (1969), pp. 466–468.

Primary Examiner—David M. Naff
Attorney, Agent, or Firm—Robert J. Schaap

[57] **ABSTRACT**

Labile coenzymes, such as reduced nicotinamide-adenide dinucleotide ($NADH_2$), used in biological diagnostic determinations are stabilized by forming a composition of the coenzyme with an organic solvent such as 1,2 propanediol in the presence of at least 1% by volume of a solid, inert hygroscopic agent such as 10% by volume of a molecular sieve material. After stabilization, the inert hygroscopic agent can be removed without materially affecting stabilization of the composition. The stabilized composition shows excellent shelf life and a container in which the composition is stored may be repeatedly opened for use without degradation of the labile coenzymes such as the labile $NADH_2$.

20 Claims, No Drawings

United States Patent [19]
Ikuta et al.
[11] **4,216,292**
[45] **Aug. 5, 1980**

[54] **PROCESS FOR THE PRODUCTION OF SARCOSINE OXIDASE**

[75] Inventors: **Shigeru Ikuta; Kazuo Matsuura; Yoshifumi Horiuchi**, all of Tagata, Japan

[73] Assignee: **Toyo Jozo Kabushiki Kaisha**, Tagata, Japan

[21] Appl. No.: **946,402**

[22] Filed: **Sep. 27, 1978**

[30] **Foreign Application Priority Data**

Oct. 4, 1977 [JP] Japan 52-119776

[51] **Int. Cl.**² **C12D 13/10**

[52] **U.S. Cl.** **435/191**; 435/17; 435/832

[58] **Field of Search** ..... 195/65, 66 R; 435/17, 435/191

[56] **References Cited**

PUBLICATIONS

Enzyme Handbook (Japan) 1966, pp. 125–126.

Primary Examiner—Lionel M. Shapiro
Attorney, Agent, or Firm—Young & Thompson

[57] **ABSTRACT**

An enzyme sarcosine oxidase is produced by culturing a microorganism belonging to the genus Bacillus, and particularly the species Bacillus sp. B-0618, FERM-P No. 4049, NRRL No. B-11380, and isolating the sarcosine oxidase thus produced from the culture medium. Sarcosine oxidase is useful for the determination of creatinine in the presence of creatinase and creatininase in a sample by mixing the enzymes with the sample and then measuring the generated hydrogen peroxide, formaldehyde or glycine.

2 Claims, 6 Drawing Figures

United States Patent [19]
Terada et al.
[11] **4,202,941**
[45] **May 13, 1980**

[54] **GLYCEROL OXIDASE AND PROCESS FOR THE PRODUCTION THEREOF AND METHOD FOR THE QUANTITATIVE DETERMINATION OF GLYCEROL BY GLYCEROL OXIDASE**

[75] Inventors: **Osamu Terada; Takayuki Uwajima; Akira Mihara; Kazuo Aisaka**, all of Machida; **Hiroko Akita**, Yokohama; **Toshiaki Nagai; Yoshiaki Shimizu**, both of Sunto, all of Japan

[73] Assignee: **Kyowa Hakko Kogyo, Co. Ltd.**, Japan

[21] Appl. No.: **897,695**

[22] Filed: **Apr. 19, 1978**

[30] **Foreign Application Priority Data**

Apr. 19, 1977 [JP] Japan 52-44146

[51] **Int. Cl.**² **C07G 7/028**; G01N 31/14

[52] **U.S. Cl.** **435/190**; 435/25; 435/27; 435/28

[58] **Field of Search** ..... 195/62, 65, 103.5 R

[56] **References Cited**

PUBLICATIONS

Journal of General Microbiology (1978), vol. 107, pp. 289–296.
Annual Review of Microbiology, vol. 30, pp. 535–578 (1976).

Primary Examiner—Lionel M. Shapiro
Attorney, Agent, or Firm—Craig and Antonelli

[57] **ABSTRACT**

Glycerol oxidase is an oxidizing enzyme of glycerol characterized by its ability to oxidize glycerol in the presence of oxygen to form hydrogen peroxide and glyceraldehyde. This enzyme is produced by cultivation of a microorganism belonging to the genus Aspergillus or the genus Neurospora in a nutrient medium.

9 Claims, 11 Drawing Figures

United States Patent [19]
Marshall
[11] **4,211,842**
[45] **Jul. 8, 1980**

[54] **STARCH-DEGRADING BENZYMES DERIVED FROM *CLACOSPORIUM RESINAE***

[75] Inventor: **James J. Marshall**, Miami, Fla.

[73] Assignee: **Lifeline Products, Inc.**, Plainfield, N.J.

[21] Appl. No.: **892,747**

[22] Filed: **Apr. 3, 1978**

[51] **Int. Cl.**² **C12D 13/10**

[52] **U.S. Cl.** **435/210**; 435/911; 435/815

[58] **Field of Search** ..... 195/62, 65, 66 R, 31 R; 435/210, 911

[56] **References Cited**

PUBLICATIONS

Journal of Dental Research vol. 52 No. 3 p. 573 Jun. 1973.
Chemical Abstracts vol. 75, 84682h (1971).

Primary Examiner—Lionel M. Shapiro
Attorney, Agent, or Firm—Cooper, Dunham, Clark, Griffin & Moran

[57] **ABSTRACT**

A novel mixture of starch-degrading enzymes is produced by a strain of *Cladosporium resinae* (Strain ATCC No. 20495). One component of this mixture is a novel exo-α-glucanase (exo-pullulanase). The enzyme mixture is prepared by culturing the microorganism and recovering the enzyme mixture from the medium after removal of grown cells. Exopullulanase can be isolated by fractionation of the mixture. Both the mixture and the exo-pullulanase can be used in the manufacture of dextrose from starch, and alone or in conjunction with appropriate other starch-degrading enzymes, in the production of specific starch conversion products, including fructose syrups. Both the mixture and the exo-pullulanase can also be used for increasing the fermentability of high DE starch conversion products, for example, in production of low calorie alcoholic beverages.

11 Claims, No Drawings

United States Patent [19]
Hiraga et al.
[11] **4,228,241**
[45] **Oct. 14, 1980**

[54] **METHOD FOR PRODUCING A PEPTIDASE**

[75] Inventors: **Hirofumi Hiraga**, Kanagawa; **Ryuichi Miyajima; Koji Mitsugi**, both of Yokohama, all of Japan

[73] Assignee: **Ajinomoto Company, Incorporated**, Tokyo, Japan

[21] Appl. No.: **889,877**

[22] Filed: **Mar. 24, 1978**

[30] **Foreign Application Priority Data**

Mar. 28, 1977 [JP] Japan 52-34295

[51] **Int. Cl.**[2] **C12N 9/48**
[52] **U.S. Cl.** **435/212**; 435/225; 435/913; 435/918
[58] **Field of Search** ..... 195/65, 66 R, 62, 114, 195/53, 55; 435/212, 219-226

[56] **References Cited**

U.S. PATENT DOCUMENTS

2,888,385	5/1959	Grandel	195/67
3,361,643	1/1968	Fukushima et al.	195/66 R
3,645,850	2/1972	Ichishima et al.	195/66 R
3,947,323	3/1976	Young	195/65
3,957,581	5/1976	Tobe et al.	195/65

FOREIGN PATENT DOCUMENTS

50-46891	4/1975	Japan	195/65
50-88283	7/1975	Japan	195/65

Primary Examiner—Lionel M. Shapiro
Attorney, Agent, or Firm—Oblon, Fisher, Spivak, McClelland & Maier

[57] **ABSTRACT**

A method is provided for producing a peptidase capable of substantially completely hydrolyzing protein into its constituent amino acids which comprises culturing a strain of filamentous fungus, belonging to one of the species *Aspergillus oryzae* and *Aspergillus soyae* and characterized in that said strain is capable of producing said peptidase, in a nutrient culture medium containing at least one substrate selected from the group consisting of a fatty acid having 14, 16, 18 or 20 carbon atoms and a derivative of said fatty acid, and recovering said peptidase from said culture medium. It is particularly effective to use a combination of a sugar ester of a fatty acid and a vegetable oil as substrates in a liquid culture medium.

9 Claims, 1 Drawing Figure

United States Patent [19]
Yamada et al.
[11] **4,229,538**
[45] **Oct. 21, 1980**

[54] **PROCESS FOR PREPARING ACYL-COA SYNTHETASE LCF-18**

[75] Inventors: **Hideaki Yamada; Sakayu Shimizu; Yoshiki Tani**, all of Kyoto, Japan

[73] Assignee: **Amano Pharmaceutical Co. Ltd.**, Nagoya, Japan

[21] Appl. No.: **28,604**

[22] Filed: **Apr. 9, 1979**

[30] **Foreign Application Priority Data**

May 15, 1978 [JP] Japan 53-56604
Jan. 26, 1979 [JP] Japan 54-7244

[51] **Int. Cl.**[3] **C12N 9/10**
[52] **U.S. Cl.** **435/193**; 435/15; 435/911
[58] **Field of Search** 435/15, 193

[56] **References Cited**

U.S. PATENT DOCUMENTS

4,071,413	1/1978	Takahashi et al.	435/15 X

OTHER PUBLICATIONS

Estroumza et al., Chemical Abstracts vol. 72, 96873x (1970).
Ray et al., Chemical Abstracts vol. 86, 52028k (1977).
Kamiryo e. ., Chemical Abstracts vol. 88, 34332s (1978).

Primary Examiner—Lionel M. Shapiro
Attorney, Agent, or Firm—Browdy and Neimark

[57] **ABSTRACT**

Acyl-CoA synthetase, having a high activity to C_{16}-C_{18} long chain fatty acids, is obtained by culturing strains belonging to various genera. As is known, acyl-CoA synthetase, having a strong activity to C_{16}-C_{18} long chain fatty acids, is generally obtained from liver of rat; however, it has now been discovered that acyl-CoA synthetase can be obtained from microorganisms and this enzyme is called acyl-CoA synthetase LCF-18. By use of acyl-CoA synthetase LCF-18 of the present invention which has a high activity to C_{16}-C_{18} long chain fatty acids, serum non-esterified fatty acid of human beings can be accurately determined, and it is very useful for diagnosis of diabetes and so forth.

2 Claims, 4 Drawing Figures

United States Patent [19]
Coan
[11] **4,229,540**
[45] **Oct. 21, 1980**

[54] **HYDROLASE PURIFIED FROM HUMAN PLASMA**

[75] Inventor: **Michael H. Coan**, El Cerrito, Calif.

[73] Assignee: **Cutter Laboratories, Inc.**, Berkeley, Calif.

[21] Appl. No.: **54,127**

[22] Filed: **Jul. 2, 1979**

[51] **Int. Cl.**[3] **C12N 9/48**; C12N 9/50; C12N 9/14
[52] **U.S. Cl.** **435/219**; 435/195; 435/212; 435/2; 435/13; 424/94; 424/101
[58] **Field of Search** 435/2, 13, 195, 212, 435/219; 424/101, 94

[56] **References Cited**

PUBLICATIONS

Kisiel et al., Biochemistry, vol. 16, No. 26, pp. 5824-5831 (1977).

Primary Examiner—Lionel M. Shapiro
Attorney, Agent, or Firm—James A. Giblin

[57] **ABSTRACT**

A previously undescribed hydrolytic enzyme has been successfully isolated from human plasma and purified to homogeneity. The enzyme has a molecular weight of about 70,000 daltons, has a Km for the substrate H-D-Phe-Pip-Arg-PNA of about 0.057 mM, a K_I for benzamidine of about 1.1×10^{-5} M, is bindable to and elutable from insoluble barium salts, is inhibited by antithrombin III, especially in the presence of heparin, and, in vitro, has been found to activate and degrade human Factor VIII, activate human Factor V, and inhibit platelet aggregation induced by ADP, epinephrine, or collagen, thus providing a substance useful for antithrombotic studies.

3 Claims, No Drawings

United States Patent [19]
Kusakabe et al.
[11] **4,234,691**
[45] **Nov. 18, 1980**

[54] **L-LYSINE α-OXIDASE**

[75] Inventors: **Hitoshi Kusakabe**, Kyoto; **Kenjiro Kodama**, Choshi; **Yuichiro Midorikawa**, Choshi; **Akira Kuninaka**, Choshi; **Haruo Misono**, Hirakata; **Kenji Soda**, Uji, all of Japan

[73] Assignee: **Yamasa Shoyu Kabushiki Kaisha**, Chiba, Japan

[21] Appl. No.: **15,179**

[22] Filed: **Feb. 26, 1979**

[30] **Foreign Application Priority Data**

Feb. 27, 1978 [JP] Japan 53/20993
Jun. 16, 1978 [JP] Japan 53/73441

[51] **Int. Cl.**[2] **C12N 9/06**
[52] **U.S. Cl.** **435/191**; 435/25; 435/945
[58] Field of Search 195/62, 65; 435/191

[56] **References Cited**

PUBLICATIONS

Greenberg, ed., Metabolic Pathways, Third edition, vol. 3, pp. 38-47, (1969).
Glick, ed., Methods of Biochemical Analysis, vol. IV, pp. 285-306, (1957).
Analytical Biochemistry, vol. 49, pp. 225-239, (1972).
Analytical Biochemistry, vol. 87, pp. 283-286, (1978).
Guilbault, Handbook of Enzymatic Methods of Analysis, pp. 217-219, (1976).

Primary Examiner—Lionel M. Shapiro
Attorney, Agent, or Firm—Wenderoth, Lind & Ponack

[57] **ABSTRACT**

An L-lysine α-oxidase, that is, a novel L-amino acid oxidase having very high substrate-specificity to L-lysine is produced by culturing a specific microorganism belonging to Trichoderma in a medium.

6 Claims, 3 Drawing Figures

United States Patent [19]
Nakanishi et al.
[11] **4,273,874**
[45] **Jun. 16, 1981**

[54] **ACIDIC URICASE AND PROCESS FOR PRODUCTION THEREOF**

[75] Inventors: **Toru Nakanishi**, Atsugi; **Yoshimi Shigemasa**, Machida, both of Japan

[73] Assignee: **Kyowa Hakko Kogyo Co., Ltd.**, Tokyo, Japan

[21] Appl. No.: **103,579**

[22] Filed: **Dec. 14, 1979**

[30] **Foreign Application Priority Data**

Dec. 14, 1978 [JP] Japan 53/153648

[51] **Int. Cl.**[3] **C12N 9/06**; C12Q 1/62
[52] **U.S. Cl.** **435/191**; 435/10; 435/886
[58] **Field of Search** 435/191, 10

[56] **References Cited**

U.S. PATENT DOCUMENTS

3,431,176	3/1969	Fukumoto et al.	435/191
3,475,276	10/1969	Kano	435/191
3,616,231	10/1971	Bergmeyer et al.	435/191
3,669,843	6/1972	Aunstrup et al.	435/191
3,767,533	10/1973	Sugisaki et al.	435/191
3,810,820	5/1974	Laboureur et al.	435/191
4,062,731	12/1977	Snoke et al.	435/191
4,064,010	12/1977	Harris et al.	435/191

Primary Examiner—Lionel M. Shapiro
Attorney, Agent, or Firm—Fitzpatrick, Cella, Harper & Scinto

[57] **ABSTRACT**

Acidic uricase is produced by fermentation of a microorganism of the genus Streptomyces. The enzyme is useful for the quantitative determination of uric acid in a sample.

5 Claims, 4 Drawing Figures

United States Patent [19]
Iida et al.
[11] **4,237,230**
[45] **Dec. 2, 1980**

[54] NOVEL LACTASE

[75] Inventors: **Takao Iida**; **Sho Ozaki**, both of Shiga; **Toshihiko Kotaka**, Otsu, all of Japan

[73] Assignee: **Daiwa Kasei Kabushiki Kaisha**, Osaka, Japan

[21] Appl. No.: **52,444**

[22] Filed: **Jun. 26, 1979**

Related U.S. Application Data

[63] Continuation-in-part of Ser. No. 884,421, Mar. 8, 1978, abandoned.

[30] **Foreign Application Priority Data**

May 31, 1977 [JP] Japan 52-64347

[51] **Int. Cl.**[3] **C12N 9/38**
[52] **U.S. Cl.** **435/207**; 435/835
[58] **Field of Search** 435/207

[56] **References Cited**

U.S. PATENT DOCUMENTS

3,816,259	6/1974	Collinge et al.	435/207
4,179,335	12/1979	Long et al.	435/207

FOREIGN PATENT DOCUMENTS

2554407 10/1976 Fed. Rep. of Germany

Primary Examiner—Lionel M. Shapiro
Attorney, Agent, or Firm—Stevens, Davis, Miller & Mosher

[57] **ABSTRACT**

A novel lactase having a molecular weight of about 3×10^5, an optimum pH value of about 6.0, an optimum temperature of about 60° C. and at least 1 of the ratio of the activity for hydrolyzing lactose to the activity for hydrolyzing a synthetic substrate: o-nitrophenyl-β-D-galactopyranoside (Lact/ONPG ratio), which is produced by cultivating a microorganism of the genus Bacillus being capable of producing the enzyme, particularly *Bacillus circulans* LOB 377 (ATCC No. 31382) and isolating from the culture broth. This novel lactase is characteristic in the excellent thermostability and the high Lact/ONPG ratio and hence is useful for treating milk and milk products as well as for preventing diarrhea due to lactose intolerance, especially in babies and infants.

4 Claims, 10 Drawing Figures

United States Patent [19]
Zikakis
[11] **4,238,566**
[45] **Dec. 9, 1980**

[54] **XANTHINE OXIDASE**

[75] Inventor: **John P. Zikakis**, Townsend, Del.

[73] Assignee: **University of Delaware**, Newark, Del.

[21] Appl. No.: **114,047**

[22] Filed: **Jan. 21, 1980**

Related U.S. Application Data

[60] Continuation-in-part of Ser. No. 14,338, Feb. 23, 1979, abandoned, which is a division of Ser. No. 806,736, Jun. 15, 1977, Pat. No. 4,172,763.

[51] **Int. Cl.**[3] **C12N 9/02**; C12N 9/06
[52] **U.S. Cl.** **435/189**; 435/191
[58] **Field of Search** 435/189, 191

[56] **References Cited**

PUBLICATIONS

Waud et al., Archives of Biochemistry and Biophysics, vol. 169, pp. 695–701 (1975).
Methods in Enzymology, vol. II, 1955, pp. 482–485.

Primary Examiner—Lionel M. Shapiro

[57] **ABSTRACT**

A milk xanthine oxidase active enzyme concentrate having an average protein to flavin ratio as measured by E_{280nm} for protein and E_{450nm} for flavin of 2.0 to 4.1, one symmetric peak by ion-exchange gel chromatography, and shows a single protein band by polyacrylamide disc gel electrophoresis. The xanthine oxidase is not denatured.

2 Claims, 2 Drawing Figures

United States Patent [19]
Miwa et al.
[11] **4,229,539**
[45] **Oct. 21, 1980**

[54] **β-GALACTOSIDASE AND PRODUCTION THEREOF**

[75] Inventors: **Tan Miwa**; **Reisuke Kobayashi**, both of Shizuoka; **Kiyoshi Takita**, Shimizu, all of Japan

[73] Assignee: **Kumiai Chemical Industry Co., Ltd.**, Tokyo, Japan

[21] Appl. No.: **6,575**

[22] Filed: **Jan. 26, 1979**

[30] **Foreign Application Priority Data**

Feb. 6, 1978 [JP] Japan 53/12102

[51] **Int. Cl.**[2] **C12N 9/38**
[52] **U.S. Cl.** **435/207**; 435/933
[58] **Field of Search** 195/62, 65; 435/207

[56] **References Cited**

PUBLICATIONS

Derwent Publication 065394 of Japan Kokai 51-142593 Aug. 12, 1976.

Primary Examiner—Lionel M. Shapiro
Attorney, Agent, or Firm—Haight, Rosfeld, Noble & Santa Maria

[57] **ABSTRACT**

A new β-galactosidase is now provided which is highly effective to digest lactose and stable at acidic pH values and thermally stable. The β-galactosidase is produced by *Penicillium multicolor* in high yield and is isolated from the culture medium of this microorganism in an inexpensive and easy way.

7 Claims, No Drawings

United States Patent [19]
Yoshida et al.
[11] **4,258,134**
[45] **Mar. 24, 1981**

[54] **NOVEL HYALURONIDASE BMP-8231 AND PRODUCTION THEREOF**

[75] Inventors: **Keizo Yoshida**, Ibaraki; **Takashi Fujii**, Sekimachi; **Hiroyuki Kikuchi**, Hachiouji, all of Japan

[73] Assignee: **Fujisawa Pharmaceutical Co., Ltd.**, Osaka, Japan

[21] Appl. No.: **35,719**

[22] Filed: **May 3, 1979**

[30] **Foreign Application Priority Data**

May 11, 1978 [JP] Japan 53/56313

[51] **Int. Cl.**[3] **C12N 9/26**
[52] **U.S. Cl.** **435/201**; 435/886
[58] **Field of Search** 435/201

[56] **References Cited**

U.S. PATENT DOCUMENTS

3,728,223	4/1973	Kaneko et al.	435/201
3,945,889	3/1976	Mima et al.	435/201

FOREIGN PATENT DOCUMENTS

2018608 5/1970 France .

OTHER PUBLICATIONS

Neufeld et al., editors, Methods in Enzymology, vol. VIII, pp. 654-662, (1966).
Chemical Abstracts 71, 46855b, (1969).
Chemical Abstracts 82, 40537e, (1975).
Chemical Abstracts 76, 11008d, (1972).
Chemical Abstracts 85, 76359z, (1976).

Primary Examiner—Lionel M. Shapiro
Attorney, Agent, or Firm—Oblon, Fisher, Spivak, McClelland & Maier

[57] **ABSTRACT**

Hyaluronidase obtained from Streptomyces koganeiensis has the following characteristics:
(a) Acts as an endo B-hexosaminidase
(b) Degrades hyaluronic acid but not chondroitin sulfate A, C, or chondroitin
(c) Optimum pH around 4.0
(d) Stable pH range 4.0-11.3
(e) Optimum temperature around 60° C.
(f) Stable a temperature below 60° C.
(g) Stable against proteolytic enzymes

4 Claims, 6 Drawing Figures

United States Patent [19]
Reich et al.
[11] **4,245,051**
[45] **Jan. 13, 1981**

[54] **HUMAN SERUM PLASMINOGEN ACTIVATOR**

[75] Inventors: **Edward Reich**, New York; **Arabinda Guha**, Pelham Manor; **Wolf-Dieter Schleuning**, New York, all of N.Y.

[73] Assignee: **Rockefeller University**, New York, N.Y.

[21] Appl. No.: **891,808**

[22] Filed: **Mar. 30, 1978**

[51] **Int. Cl.**[3] **C12N 9/48**; A61K 35/16
[52] **U.S. Cl.** ..... **435/212**; 260/112 B; 424/101
[58] **Field of Search** ..... 260/112 B; 424/101; 435/212, 215

[56] **References Cited**

U.S. PATENT DOCUMENTS

3,555,000	1/1971	Wagner	260/112 B
3,808,124	4/1974	Dziobkowski et al.	260/112 B X
3,865,692	2/1975	Holleman et al.	424/101 X
3,904,480	9/1975	Hull et al.	195/66 B
3,943,245	3/1976	Silverstein	260/112 B X
3,998,947	12/1976	D'Hinterland et al.	424/101 X

OTHER PUBLICATIONS

Summaria et al., *J. Biol. Chem.*, vol. 251, No. 18, (1976), pp. 5810-5813.
Fletcher et al., *J. Lab. and Clinical Med.*, vol. 65, No. 5, (1965), pp. 713-731.
Laemmli, *Nature*, vol. 227, (1970), pp. 680-685.
Converse et al., *Science*, vol. 189, (1975), pp. 469-472.

Primary Examiner—Lionel M. Shapiro
Attorney, Agent, or Firm—Haight, Rosfeld, Noble & Santa Maria

[57] **ABSTRACT**

A plasminogen proactivator and a corresponding activator has been isolated from mammalian and avian, especially human, plasma which is characterized within a given species as a single, electrophoretically and immunologically homogeneous protein. The activator acts as a catalyst to initiate fibrinolytic activity in plasma and is therefore useful in controlling clotting which occurs, e.g. in venous thrombosis or arterial occulsion, and in diagnosing conditions which predispose to thromboembolic phenomena. The proactivator has a long useful in vivo half life and can be used to provide a reservoir for maintaining the fibrolytic potential of blood.

4 Claims, No Drawings

United States Patent [19]
Terada et al.
[11] **4,255,519**
[45] **Mar. 10, 1981**

[54] **GLYCEROL OXIDASE AND PROCESS FOR THE PRODUCTION THEREOF**

[75] Inventors: **Osamu Terada**; **Takayuki Uwajima**, both of Machida; **Hiroko Akita**, Yokohama, all of Japan

[73] Assignee: **Kyowa Hakko Kogyo Co., Ltd.**, Japan

[21] Appl. No.: **59,101**

[22] Filed: **Jul. 19, 1979**

[30] **Foreign Application Priority Data**

Jul. 21, 1978 [JP] Japan 53/88261

[51] **Int. Cl.**[3] **C12N 9/04**; G01N 31/14
[52] **U.S. Cl.** **435/190**; 435/25; 435/28; 435/933
[58] **Field of Search** 435/190, 192, 933, 25, 435/27, 28

[56] **References Cited**

PUBLICATIONS

Journal of General Microbiology (1978), vol. 107, pp. 289-296.
Annual Review of Microbiology, vol. 30, pp. 535-578, (1976).

Primary Examiner—Lionel M. Shapiro
Attorney, Agent, or Firm—Craig & Antonelli

[57] **ABSTRACT**

Glycerol oxidase II is an oxidizing enzyme of glycerol characterized by its ability to oxidize glycerol in the presence of oxygen to form hydrogen peroxide and glyceraldehyde. This action of the present enzyme is the same as that of the enzyme glycerol oxidase I disclosed in U.S. application Ser. No. 897,695 filed on Apr. 19, 1978. However, this enzyme has characteristic properties in substrate specificity, optimum and stable pH, optimum temperature for action, substrate affinity (Michaelis constant glycerol). This enzyme is produced by culturing a microorganism belonging to the genus Penicillium.

7 Claims, 7 Drawing Figures

United States Patent [19]
Gallo
[11] **4,275,163**
[45] **Jun. 23, 1981**

[54] **CELLULASE-PRODUCING MICROORGANISM**

[75] Inventor: **Benedict J. Gallo**, Natick, Mass.

[73] Assignee: **The United States of America as represented by the Secretary of the Army**, Washington, D.C.

[21] Appl. No.: **962,522**

[22] Filed: **Nov. 20, 1978**

[51] **Int. Cl.**[3] **C12N 9/42**; C12N 15/00; C12R 1/885
[52] **U.S. Cl.** **435/209**; 435/172; 435/254; 435/945
[58] **Field of Search** 435/209, 254, 945, 172

[56] **References Cited**

U.S. PATENT DOCUMENTS

3,734,831	5/1973	Hulme	435/209
3,972,775	8/1976	Wilke et al.	435/209 X

FOREIGN PATENT DOCUMENTS

574471 9/1977 U.S.S.R. 435/209

OTHER PUBLICATIONS

Montenecourt et al., Applied and Environmental Microbiology, vol. 34, pp. 777-782 (Dec. 1977).
Mandels et al., Applied Microbiology, vol. 21, pp. 152-154 (Jan. 1971).
Ladisch et al., Science, vol. 201, pp. 743-745 (Aug. 1978).

Primary Examiner—Lionel M. Shapiro
Attorney, Agent, or Firm—Nathan Edelberg; Robert P. Gibson; Lawrence E. Labadini

[57] **ABSTRACT**

A process and a microorganism for synthesizing cellulase enzymes are described. The microorganism is a mutant strain of an Ascomycete fungus capable of synthesizing cellulases. The synthesis of cellulases by the mutant is nonrepressed by glycerol, repressed by glucose but not subject to postrepression lag, and inducible to high levels by lactose. Furthermore, the combination of lactose with xylose elicits maximum cellulase synthesis by the mutant.

7 Claims, 6 Drawing Figures

United States Patent [19]
Beppu et al.
[11] **4,275,162**
[45] **Jun. 23, 1981**

[54] **PROCESS FOR THE PRODUCTION OF SPHINGOMYELINASE**

[75] Inventors: **Teruhiko Beppu**, No. 5-21, 1-chome, Horinouchi, Suginami-ku, Tokyo; **Noboru Ando**, Fujisawa, both of Japan

[73] Assignees: **Chiyoda Chemical Engineering & Construction Co., Ltd.**, Yokohama; **Teruhiko Beppu**, Tokyo, both of Japan

[21] Appl. No.: **126,202**

[22] Filed: **Mar. 3, 1980**

[30] **Foreign Application Priority Data**

Mar. 9, 1979 [JP] Japan 54-26794

[51] **Int. Cl.**[3] **C12N 9/16**
[52] **U.S. Cl.** **435/196**; 435/19; 435/874
[58] **Field of Search** 435/195-198, 435/18, 19

[56] **References Cited**

PUBLICATIONS

Biochimica et Biophysica Acta, vol. 528, pp. 247-256 (1978).
Journal of Biochemistry, vol. 84, pp. 55-63 (1978), Tokyo.

Primary Examiner—Lionel M. Shapiro
Attorney, Agent, or Firm—Frishauf, Holtz, Goodman & Woodward

[57] **ABSTRACT**

A process for the production of sphingomyelinase comprising cultivating a sphingomyelinase-producing microorganism, belonging to the genus Pseudomonas, in a culture medium and recovering sphingomyelinase from the culture medium.

9 Claims, No Drawings

United States Patent [19]
Ando et al.
[11] **4,259,446**
[45] **Mar. 31, 1981**

[54] **PROCESS FOR PREPARATION OF DEOXYRIBONUCLEASES**

[75] Inventors: **Tadahiko Ando**; **Takehiko Shibata**, both of Tokyo; **Eiji Hayase**, Niiza; **Shukuko Ikawa**, Wako, all of Japan

[73] Assignee: **Rikagaku Kenkyusho**, Wako, Japan

[21] Appl. No.: **58,802**

[22] Filed: **Jul. 19, 1979**

[30] **Foreign Application Priority Data**

Jul. 28, 1978 [JP] Japan 53/92094

[51] **Int. Cl.**[3] **C12N 9/22**; C12N 15/00
[52] **U.S. Cl.** **435/199**; 435/172
[58] **Field of Search** 435/199, 172

[56] **References Cited**

U.S. PATENT DOCUMENTS

3,930,956	1/1976	Juni	435/172 X
4,080,261	3/1978	Shibata et al.	435/172 X
4,161,424	7/1979	Ando et al.	435/199

Primary Examiner—Lionel M. Shapiro
Attorney, Agent, or Firm—Bucknam and Archer

[57] **ABSTRACT**

Disclosed is a process for the preparation of deoxyribonucleases (DNases) which comprise culturing a novel transformant belonging to the genus Bacillus, collecting a cell-free extract from cells obtained during a period ranging from the late logarithmic growth phase to the initial stage of the stationary growth phase, and subjecting said cell-free extract to fractionation or separation to obtain two or more DNases each of which possessing different substrate specificity.

5 Claims, No Drawings

United States Patent [19]
Tang et al.
[11] **4,266,031**
[45] **May 5, 1981**

[54] **PROTEASE PRODUCT OF REDUCED ALLERGENICITY**

[75] Inventors: **Peter Tang**; **Grethe C. Nielsen**, both of Tåstrup; **Keith Gibson**, Vaerloese; **Knud Aunstrup**, Farum; **Hans Schiff**, Soeborg, all of Denmark

[73] Assignee: **Novo Industri A/S**, Denmark

[21] Appl. No.: **54,555**

[22] Filed: **Jul. 3, 1979**

[30] **Foreign Application Priority Data**

Jul. 4, 1978 [GB] United Kingdom 28773/78

[51] **Int. Cl.**[3] **C12N 9/96**; C12N 9/56
[52] **U.S. Cl.** **435/188**; 435/172; 435/222; 435/836
[58] **Field of Search** 435/172, 187, 188, 222, 435/221, 836

[56] **References Cited**

U.S. PATENT DOCUMENTS

3,748,233	7/1973	Viccaro	435/222

FOREIGN PATENT DOCUMENTS

2063988	7/1972	Fed. Rep. of Germany .
2061067	6/1971	France .
2075637	10/1971	France .
1263765	2/1972	United Kingdom .

OTHER PUBLICATIONS

Keay, Fermentation Technology Today, Proc IV Int. Ferment Symp., Mar. 19-25, 1972, Kyoto, Japan, pp. 289-295.
Methods in Enzymology, vol. 19, pp. 199-215 (1970), article by Ottesen et al entitled The Subtilisins.

Primary Examiner—Lionel M. Shapiro
Attorney, Agent, or Firm—Fidelman, Wolffe & Waldron

[57] **ABSTRACT**

A novel protease product suitable for admixture to washing compositions and exhibiting substantially attenuated allergenic properties is prepared by cultivating strains of *Bacillus licheniformis* which have been mutated to block their synthesis of protease other than Subtilopeptidase A (subtilisin). The commercial *Bacillus licheniformis* derived protease products are mixtures of subtilisin and a non-serine protease of lower stability and greater allergenicity than subtilisin.

6 Claims, 4 Drawing Figures

United States Patent [19]
Häfeli
[11] **4,259,447**
[45] **Mar. 31, 1981**

[54] **PROCESS FOR THE PRODUCTION OF UROKINASE IN PURE CONDITION**

[75] Inventor: **Robert Häfeli**, Zürich, Switzerland

[73] Assignee: **Alpha Patent Limited**, Tel-Aviv, Israel

[21] Appl. No.: **53,552**

[22] Filed: **Jun. 29, 1979**

[30] **Foreign Application Priority Data**

Jun. 30, 1978 [CH] Switzerland 7197/78

[51] **Int. Cl.**[3] **C12N 9/72**
[52] **U.S. Cl.** **435/215**; 435/815
[58] **Field of Search** 435/215, 815

[56] **References Cited**

U.S. PATENT DOCUMENTS

3,010,074	3/1977	Uemura et al.	435/215
4,066,506	1/1978	Johnson et al.	435/215
4,165,258	8/1979	Pye	435/215

OTHER PUBLICATIONS

Johnson et al., Analytical Biochemistry, vol. 72, pp. 573-576 (1976).
Chemical Abstracts, vol. 87, refernce 196465u (1977).
Chemical Abstracts, vol. 85, reference 173512b (1976).
Chemical Abstracts, vol. 85, reference 16039k (1976).

Primary Examiner—Lionel M. Shapiro
Attorney, Agent, or Firm—Cushman, Darby & Cushman

[57] **ABSTRACT**

There is provided a process for the production of pure, concentrated urokinase starting from a crude urokinase solution. The crude urokinase solution is contacted in a medium having a pH of ≧6 with a porous solid matrix having a high specific surface area on whose surface there is immobilized aprotinin. Subsequently the urokinase adsorbed in this manner is eluted in an elution agent having a pH≦4.5. There are obtained highly concentrated and very pure solutions of urokinase. The urokinase is used in medicine as a pharmaceutical for the dissolving of fibrinous clots and coagulums.

35 Claims, No Drawings

United States Patent [19]
Nakanishi et al.
[11] **4,245,050**
[45] **Jan. 13, 1981**

[54] **PROCESS FOR THE PREPARATION OF CHOLINE OXIDASE BY FERMENTATION**

[75] Inventors: **Toru Nakanishi**, Atsugi; **Yozo Machida**, Machida, both of Japan

[73] Assignee: **Kyowa Hakko Kogyo Co., Ltd.**, Tokyo, Japan

[21] Appl. No.: **60,282**

[22] Filed: **Jul. 25, 1979**

Related U.S. Application Data

[63] Continuation of Ser. No. 853,458, Nov. 21, 1977, abandoned.

[30] **Foreign Application Priority Data**

Nov. 19, 1976 [JP] Japan 51-139120
Dec. 25, 1976 [JP] Japan 51-155655

[51] **Int. Cl.**[3] **C12N 9/06**
[52] **U.S. Cl.** **435/191**; 435/25; 435/840; 435/843
[58] **Field of Search** 435/192, 191, 25, 28

[56] **References Cited**

U.S. PATENT DOCUMENTS

4,087,329	5/1978	Terada et al.	435/227
4,093,517	6/1978	Masurekar et al.	435/190
4,135,980	1/1979	Ikuta et al.	435/18

OTHER PUBLICATIONS

Ikuta et al., Journal of Biochemistry, (Tokyo), vol. 82, pp. 1741-1749, 157-163, (1977).
Takayama et al., Rinsho Byori, (Clinical Pathology, vol. 24, p. 461, (1976).

Primary Examiner—Lionel M. Shapiro
Attorney, Agent, or Firm—Fitzpatrick, Cella, Harper & Scinto

[57] **ABSTRACT**

Choline oxidase is produced by fermentation of a microorganism belonging to the genus Brevibacterium or Corynebacterium and which is capable of producing choline oxidase. Choline oxidase is useful for the determination of choline.

7 Claims, 6 Drawing Figures

United States Patent [19]
Eggeling et al.
[11] **4,250,261**
[45] **Feb. 10, 1981**

[54] **PROCESS FOR THE MICROBIAL PRODUCTION OF ALCOHOLOXIDASE**

[75] Inventors: **Lothar Eggeling; Manfred Paschke; Hermann Sahm**, all of Jülich, Fed. Rep. of Germany

[73] Assignee: **Kernforschungsanlage Jülich Gesellschaft m.b.H.**, Jülich, Fed. Rep. of Germany

[21] Appl. No.: **55,533**

[22] Filed: **Jul. 9, 1979**

[30] **Foreign Application Priority Data**

Jul. 10, 1978 [DE] Fed. Rep. of Germany 2830327

[51] **Int. Cl.**[3] **C12N 9/04**
[52] **U.S. Cl.** **435/190**; 435/25; 435/28; 435/147; 435/168; 435/930
[58] **Field of Search** 435/190, 930, 25, 28, 435/4, 147, 168, 247, 255

[56] **References Cited**

U.S. PATENT DOCUMENTS

4,168,201	9/1979	Wegner	435/247 X

OTHER PUBLICATIONS

Reuss et al., Chemie-Ingenieur-Technik, vol. 46, No. 16, pp. 669-676, (1974).
Barman, Enzyme Handbook, Supplement I, 1974, pp. 70-71.

Primary Examiner—Lionel M. Shapiro
Attorney, Agent, or Firm—Karl F. Ross

[57] **ABSTRACT**

A method of producing alcohol oxidase wherein *Hansenula polymorpha* yeast is cultivated in a nutrient broth containing inorganic nutrient salts of which either the phosphate, nitrate or potassium is present in a cell-growth-limiting concentration at a temperature of 25° to 45° C. and a pH of 4.0 to 6.0 with oxygen being supplied as air for a mixture of air and oxygen. According to the invention, an organic substrate consisting of glycerin, sorbite or xylose, noncatabolite-repressive to alcohol-oxidase is added to the broth in a concentration of 0.1 to 1.0% in a nutrient solution at a rate of 0.03 to $0.15h^{-1}$.

5 Claims, No Drawings

United States Patent [19]
Ellis et al.
[11] **4,268,631**
[45] **May 19, 1981**

[54] **APOGLUCOSE OXIDASE PREPARATION**

[75] Inventors: **Paul B. Ellis**, High Wycombe; **David L. Morris**, Stoke Poges, both of England

[73] Assignee: **Miles Laboratories, Inc.**, Elkhart, Ind.

[21] Appl. No.: **45,191**

[22] Filed: **Jun. 4, 1979**

[51] **Int. Cl.**[3] **C12N 9/04**
[52] **U.S. Cl.** **435/190**; 435/25; 435/815
[58] **Field of Search** 435/190, 815, 25

[56] **References Cited**

PUBLICATIONS

Yoshimura et al., Journal Biochemistry, (Tokyo), vol. 69, pp. 969-972.
Swoboda, Biochimica et Biophysica Acta, vol. 175, pp. 365-379, (1969).
Zappelli et al., Eur. J. Biochem., vol. 89, pp. 491-499, (1978).

Primary Examiner—Lionel M. Shapiro
Attorney, Agent, or Firm—Andrew L. Klawitter

[57] **ABSTRACT**

An apoglucose oxidase preparation having a residual glucose oxidase activity of less than 0.05%, and preferably less than 0.005%. The preparation is obtained by incubation of glucose oxidase in aqueous solution at a pH of less than about 2 and in the presence of about 20 to about 40, preferably about 30, percent by volume glycerol, and separating resulting dissociated prosthetic group, flavin adenine dinucleotide, from apoglucose oxidase by column chromatography, preferably on cross-linked dextran gel. The purified apoglucose oxidase is useful as a reagent in specific binding assays employing flavin adenine dinucleotide as a label.

21 Claims, No Drawings

United States Patent [19]
Wildman et al.
[11] **4,268,632**
[45] **May 19, 1981**

[54] **PROCESS FOR ISOLATION OF RIBULOSE 1,5-DIPHOSPHATE CARBOXYLASE FROM PLANT LEAVES**

[75] Inventors: **Samuel G. Wildman**, Santa Monica; **Prachuab Kwanyuen**, Los Angeles, both of Calif.

[73] Assignee: **Leaf Proteins, Inc.**, Carson, Calif.

[21] Appl. No.: **78,505**

[22] Filed: **Sep. 24, 1979**

[51] **Int. Cl.**[3] **C12N 9/88**
[52] **U.S. Cl.** **435/232**; 435/814; 435/816
[58] **Field of Search** 435/232

[56] **References Cited**

PUBLICATIONS

Barman, Enzyme Handbook, vol. II, pp. 723-724 (1969).
Kawishima et al., Biochimica Biophysica Acta, vol. 229, pp. 749-760 (1971).

Primary Examiner—Lionel M. Shapiro
Attorney, Agent, or Firm—Lyon & Lyon

[57] **ABSTRACT**

Described herein is a process for isolating the enzymatic protein ribulose 1,5-diphosphate carboxylase from the green leaves of plants. In the process, which is particularly suited to obtaining the protein from tobacco, the leaves are ground or otherwise pulverized in the presence of a reducing agent, followed by heating the resulting pulp to about 50° C. A liquid portion containing the desired protein is separated from the pulp and then cooled to cause the crystallization of the ribulose 1,5-diphosphate carboxylase. After separation of the crystalline material, the supernatant is acidified to yield lower molecular weight proteins.

27 Claims, No Drawings

United States Patent [19]
Singh et al.
[11] **4,275,160**
[45] **Jun. 23, 1981**

[54] **IMIPRAMINE DERIVATIVES AND POLY(AMINO ACID) CONJUGATES**

[75] Inventors: **Prithipal Singh; Marcel R. Pirio**, both of Sunnyvale, Calif.

[73] Assignee: **Syva Company**, Palo Alto, Calif.

[21] Appl. No.: **55,419**

[22] Filed: **Jul. 6, 1979**

[51] **Int. Cl.**[3] **C07G 7/00**; C12N 9/96
[52] **U.S. Cl.** ..... **435/188**; 260/112 R; 260/112 B; 260/121; 260/239 BB; 424/85; 424/88; 435/7; 525/420
[58] **Field of Search** ..... 435/188, 7; 260/112 R, 260/121, 112 B; 424/85, 88; 525/420

[56] **References Cited**

U.S. PATENT DOCUMENTS

4,058,511 11/1977 Singh ..... 424/88 X
4,083,948 4/1978 Davis et al. ..... 260/112 R X
4,104,379 8/1978 Gallagher, Jr. et al. ..... 435/188 X

OTHER PUBLICATIONS

J. Anal. Tox. 1, pp. 236-243, (1977), Kaul et al.

Primary Examiner—Howard E. Schain
Attorney, Agent, or Firm—Bertram I. Rowland

[57] **ABSTRACT**

Imipramine functionalized compounds are provided for conjugation to antigenic compounds, particularly poly(amino acids), and enzymes. The antigenic conjugates are employed for the production of antibodies, which find particular use in immunoassays for the determination of imipramine, while the enzyme conjugate finds use in a homogeneous enzyme assay for the determination of imipramine.

15 Claims, No Drawings

United States Patent [19]
Ullman et al.
[11] **4,191,613**
[45] *** Mar. 4, 1980**

[54] **MALATE DEHYDROGENASE CONJUGATES FOR ENZYME IMMUNOASSAYS**

[75] Inventors: **Edwin F. Ullman**, Atherton; **Kenneth E. Rubenstein**, Menlo Park, both of Calif.

[73] Assignee: **Syva Company**, Palo Alto, Calif.

[*] Notice: The portion of the term of this patent subsequent to Dec. 3, 1991, has been disclaimed.

[21] Appl. No.: **760,499**

[22] Filed: **Jan. 19, 1977**

Related U.S. Application Data

[63] Continuation-in-part of Ser. No. 722,964, Sep. 13, 1976, Pat. No. 4,067,774, which is a continuation of Ser. No. 481,022, Jun. 20, 1974, abandoned, which is a continuation-in-part of Ser. No. 304,157, Nov. 6, 1972, Pat. No. 3,852,157, which is a continuation-in-part of Ser. No. 143,609, May 14, 1971, abandoned.

[51] **Int. Cl.**[2] **G01N 31/14**; C07G 7/02
[52] **U.S. Cl.** **435/188**; 435/7
[58] **Field of Search** ..... 195/63, 103.5 A

[56] **References Cited**

U.S. PATENT DOCUMENTS

3,850,752 11/1974 Schuurs et al. 195/63
3,852,157 12/1974 Rubenstein et al. 195/63

Primary Examiner—Alvin E. Tanenholtz
Attorney, Agent, or Firm—Bertram I. Rowland

[57] **ABSTRACT**

Novel conjugated enzyme compositions are provided for use in homogeneous enzyme immunoassays. A wide variety of compounds, particularly drugs, including drugs of abuse, drugs used in repetitive therapeutic applications, hormones, and the like, are conjugated to malate dehydrogenase. The resulting products have a high turnover rate, so as to provide a high multiplication factor when employed in a homogeneous immunoassay, have long storage lives, and allow for the accurate and sensitive detection of compounds of interest.

18 Claims, No Drawings

United States Patent [19]
Rowley et al.
[11] **4,220,722**
[45] **Sep. 2, 1980**

[54] **METHOD FOR CONJUGATING TO POLYAMINO COMPOUNDS EMPLOYING HALOACYL GROUPS AND COMPOSITIONS PREPARED THEREBY**

[75] Inventors: **Gerald L. Rowley**, San Jose; **Danton Leung**, Campbell; **Prithiphal Singh**, Santa Clara, all of Calif.

[73] Assignee: **Syva Company**, Palo Alto, Calif.

[21] Appl. No.: **876,772**

[22] Filed: **Feb. 10, 1978**

[51] **Int. Cl.**[2] **C12N 9/96**
[52] **U.S. Cl.** ..... **435/188**; 435/177; 435/7; 260/112 R; 424/12; 260/112 B; 260/112.5 R; 260/112.7
[58] **Field of Search** ..... 195/63, 68, DIG. 11; 260/112 R; 424/12; 435/7, 177, 174, 188

[56] **References Cited**

U.S. PATENT DOCUMENTS

4,067,774 1/1978 Rubenstein 195/63
4,100,268 7/1978 Scherr 424/12
4,144,131 3/1979 Richardson 195/68

Primary Examiner—Lionel M. Shapiro
Attorney, Agent, or Firm—Bertram I. Rowland

[57] **ABSTRACT**

Methods and compositions are provided for conjugating a wide variety of compounds, particularly polyfunctional compounds, having a mercapto group, either naturally present or synthetically introduced, to a polyamino compound, particularly a polypeptide (including proteins). The method employs a haloalkylcarbonyl compound, which is conjugated to one or more of the amino groups under mild acylating conditions. This is followed by combining the acylated polyamino compound with a mercapto containing compound, whereby the halogen is displaced by the sulfur of the mercapto group to form a stable thioether linkage. The resulting conjugates, depending on the compounds involved, can find uses in immunoassays, as hapten-antigen conjugates for the production of antibodies, and as ligand analog enzyme conjugates for use as reagents in controlling the distribution of substitution of a mercapto compound to a polyamino compound.

14 Claims, No Drawings

United States Patent [19]
Singh et al.
[11] **4,235,969**
[45] **Nov. 25, 1980**

[54] **PROCAINAMIDE ANTIGEN CONJUGATES AND ANTIBODIES**

[75] Inventors: **Prithipal Singh**, Santa Clara; **Marcel R. Pirio**, Mountain View, both of Calif.

[73] Assignee: **Syva Company**, Palo Alto, Calif.

[21] Appl. No.: **903,420**

[22] Filed: **May 8, 1978**

[51] **Int. Cl.**[2] **C07G 7/00**; C07G 7/02
[52] **U.S. Cl.** ..... **435/188**; 23/230 B; 260/112 B; 260/112 R; 260/121; 424/85; 424/88; 435/7; 435/190; 562/426; 562/448; 562/450
[58] **Field of Search** ..... 195/63; 424/85, 88; 260/112 R, 112 B, 121; 435/188, 7, 190

[56] **References Cited**

U.S. PATENT DOCUMENTS

3,817,837 6/1974 Rubenstein et al. ..... 195/63 X
3,843,696 10/1974 Wagner et al. ..... 260/112 R X
3,875,011 4/1975 Rubenstein et al. ..... 195/103.5 R
3,888,866 6/1975 Leute et al. ..... 424/85 X
4,046,722 9/1977 Rowland ..... 260/112 R X
4,065,354 12/1977 Ullman et al. 195/63
4,069,105 1/1978 Singh ..... 424/88 X

OTHER PUBLICATIONS

Clin. Chem. 23, pp. 705-708, (1977), Rocco et al.
Clin. Exp. Immunol. (1968), 3, pp. 901-909, Russell et al.
Dictionary of Organic Compounds, 4th Ed., vol. 5, p. 2778, 1965.

Primary Examiner—Howard E. Schain
Attorney, Agent, or Firm—Bertram I. Rowland

[57] **ABSTRACT**

Compounds are provided for use in the preparation of reagents which can be used in immunoassays for the determination of benzamides of N,N-dialkylethylenea-mines. A linking group is provided, at a particular site of the drug, which provides a link between the above compounds and an antigen, with the resulting conjugate being employed for the preparation of antibodies. The antibodies find particular use in competitive protein binding assays. Conjugates to enzymes are prepared which find particular use in homogeneous enzyme immunoassays.

12 Claims, No Drawings

United States Patent [19]
Nonaka et al.
[11] **4,212,945**
[45] **Jul. 15, 1980**

[54] **PROCESS FOR RECOVERING PROTEASE**

[75] Inventors: **Yuji Nonaka; Kiyotaka Oyama; Heijiro Satoh**, all of Shin-nanyo, Japan

[73] Assignees: **(Zaidanhojin) Sagami Chemical Research Center; Toyo Soda Manufacturing Company, Limited**, both of Tokyo, Japan

[21] Appl. No.: **907,006**

[22] Filed: **May 18, 1978**

[30] **Foreign Application Priority Data**

May 23, 1977 [JP] Japan 52-58827

[51] **Int. Cl.**[2] **C12N 9/48; C07G 7/02**
[52] **U.S. Cl.** **435/212**; 435/213; 435/218; 435/219; 435/225; 435/816; 435/70
[58] **Field of Search** ..... 195/29, 66 R; 435/212, 435/213, 218, 219, 225

[56] **References Cited**

U.S. PATENT DOCUMENTS

4,086,136 4/1978 Isowa et al. 195/29
4,119,493 10/1978 Isowa et al. 195/29

OTHER PUBLICATIONS

Perlman, Methods in Enzymology, vol. XIX, pp. 646-647, 688-693, 696-697, 758, 759 and 785, (1970).
Journal of Fermentation Technology, 40, 346-353, (1962).
Journal of Biological Chemistry, 212, 255-269, (1955).

Primary Examiner—Lionel M. Shapiro
Attorney, Agent, or Firm—Oblon, Fisher, Spivak, McClelland & Maier

[57] **ABSTRACT**

Protease is recovered by reacting a first amino acid whose amino group is protected with a protective group with a second amino acid whose carboxyl group is protected with a protective group, in an aqueous medium in the presence of a protease to result a peptide synthesis to deposit the addition compound of a dipeptide and said second C-terminal protected amino acid; dissolving said addition compound into the aqueous medium by adding a polar organic solvent which is miscible with water and separating an insoluble material from the resulting suspension by a solid-liquid separation to isolate the protease.

9 Claims, No Drawings

United States Patent [19]
Jackson et al.
[11] **4,237,231**
[45] **Dec. 2, 1980**

[54] **METHOD OF PURIFYING GLUCOSE ISOMERASE AND A COMPOSITION FOR STORING SAME**

[75] Inventors: **Denise M. Jackson**, Chicago; **Yoshihisa Tsuda**, Highland Park, both of Ill.

[73] Assignee: **UOP Inc.**, Des Plaines, Ill.

[21] Appl. No.: **93,570**

[22] Filed: **Nov. 13, 1979**

[51] **Int. Cl.**[3] **C12N 9/92**
[52] **U.S. Cl.** **435/234**; 435/814; 435/816; 435/827; 435/886; 435/890; 435/853
[58] **Field of Search** 435/234, 233, 814, 816

[56] **References Cited**

U.S. PATENT DOCUMENTS

4,077,842 3/1978 Cory 435/188

OTHER PUBLICATIONS

Palleroni et al., "Mannose Isomerase of *Pseudomonas saccharophila*," Journal of Biological Chemistry, 1956, vol. 218, pp. 535-548.
Yamanaka, "D-Xylose Isomerase," Methods in Enzymology, vol. IX, pp. 588-593 (1966).
Takasaki et al., "Studies on Sugar Isomerizing Enzyme," Agr. Biol. Chem., vol. 33, No. 11, pp. 1527-1534 (1969).

Primary Examiner—Lionel M. Shapiro
Attorney, Agent, or Firm—James R. Hoatson, Jr.; Raymond H. Nelson; William H. Page, II

[57] **ABSTRACT**

A process for purifying glucose isomerase comprises the steps of acid treatment and salt fractionation. An enzyme solution is treated with an acid, such as acetic acid, to a pH from about 3.5 to about 5.0. The proteinaceous solids are collected and extracted with a buffer, such as imidazole, whose solution has a pH of about 6 to about 8. The solution is then collected and a salt, such as ammonium sulfate, is dissolved therein from about 40% to about 50% of its saturation point. The proteinaceous solids which form are removed and additional ammonium sulfate is dissolved to attain from about 41% to about 60% of its saturation point, followed by collection of the solids containing purified enzyme. A composition which preserves enzyme activity upon storage of glucose isomerase and which imparts resistance to thermal deactivation of said enzyme comprises an aqueous solution of glycerol, a buffer whose solution is at a pH of about 6 to about 8, divalent cobalt ions and magnesium ions.

13 Claims, No Drawings

United States Patent [19]
McCollough et al.
[11] **4,275,166**
[45] **Jun. 23, 1981**

[54] **PROCESS FOR THE RECOVERY OF INTRACELLULAR ENZYME**

[75] Inventors: **George T. McCollough**, Penfield; **Theodore W. Esders**, Webster; **Shirley Y. Lynn**, Rochester, all of N.Y.

[73] Assignee: **Eastman Kodak Company**, Rochester, N.Y.

[21] Appl. No.: **91,217**

[22] Filed: **Nov. 5, 1979**

[51] **Int. Cl.**[3] **C12N 9/78**
[52] **U.S. Cl.** **435/227**; 435/259; 435/816; 435/850
[58] **Field of Search** 435/227, 259, 816

[56] **References Cited**

U.S. PATENT DOCUMENTS

3,597,323 8/1971 Roberts ..... 435/816 X
4,087,329 5/1978 Terada et al. 435/227
4,134,793 1/1979 Terada et al. 435/18

Primary Examiner—Lionel M. Shapiro
Attorney, Agent, or Firm—J. Jeffrey Hawley

[57] **ABSTRACT**

A process for the recovery of an intracellular enzyme from an aerobic soil microorganism is disclosed. The recovery method is carried out by

(a) forming an aqueous suspension of microbial cells containing the desired intracellular enzyme,
(b) disrupting the microbial cells in the suspension to release the enzyme from the cells, and
(c) before, during, or after step (b) and prior to removal of disrupted microbial cells and other cellular components, introducing a water-miscible organic solvent into the suspension to form a mixture of the organic solvent and the enzyme-containing suspension.

The desired enzyme is retained in the liquid phase of the mixture formed in step (c) while undesired cellular components such as other microbial cell proteins precipitate therefrom.

12 Claims, No Drawings

United States Patent [19]
Skinner et al.
[11] **4,243,752**
[45] **Jan. 6, 1981**

[54] **PRODUCTION OF INCREASED YIELDS OF CELLULOLYTIC ENZYMES FROM *THIELAVIA TERRESTRIS* AND SEPARATING METHODS THEREFOR**

[75] Inventors: **Wilfred A. Skinner**, Portola Valley, Calif.; **Shigeyuki Takenishi**, Nara, Japan

[73] Assignee: **SRI International**, Menlo Park, Calif.

[21] Appl. No.: **28,500**

[22] Filed: **Apr. 9, 1979**

[51] **Int. Cl.**[3] **C12N 9/42**
[52] **U.S. Cl.** **435/209**; 435/816; 435/911
[58] **Field of Search** 435/209, 816, 911

[56] **References Cited**

U.S. PATENT DOCUMENTS

3,734,831 5/1973 Hulme 435/209
4,081,328 3/1978 Skinner et al. 435/209
4,106,989 8/1978 Komura et al. 435/209

Primary Examiner—Lionel M. Shapiro
Attorney, Agent, or Firm—Donovan J. De Witt

[57] **ABSTRACT**

Increased yields of the cellulolytic enzymes from *Thielavia terrestris* are effected by novel separatory methods for the produced enzymes as well as the enhancement of the production of one of the enzymes, namely β-glucosidase, by the addition of glycerol to the media. Further, since the β-glucosidase is responsible for glucose production from cellulose, a method is provided wherein the separated β-glucosidase can be employed as, for example, on a fixed support in a position to receive concentrated streams of partially converted cellulosic materials, thereby leading to enhanced glucose production.

4 Claims, 6 Drawing Figures

United States Patent [19]
Vihko
[11] **4,205,130**
[45] **May 27, 1980**

[54] **METHOD OF PURIFICATION OF HUMAN PROSTATIC ACID PHOSPHATASE**

[76] Inventor: **Pirkko Vihko**, Jaakonkuja 1 E 3, 90230 Oulu 23, Finland

[21] Appl. No.: **19,644**

[22] Filed: **Mar. 12, 1979**

[51] **Int. Cl.**[2] **B01D 15/08**
[52] **U.S. Cl.** ..... **435/196**; 210/31 C; 435/815
[58] **Field of Search** ..... 210/31 C; 23/230 B; 435/196, 815

[56] **References Cited**

U.S. PATENT DOCUMENTS

3,901,763	8/1975	Horiuchi et al.	435/196
3,947,352	3/1976	Cuatrecasas et al.	210/31 C
4,166,766	9/1979	Metzenberg et al.	435/815

Primary Examiner—John Adee
Attorney, Agent, or Firm—Haseltine, Lake & Waters

[57] **ABSTRACT**

A new method of purification of human prostatic acid phosphatase has been provided. The starting point for the purification process is constituted by a solution containing acid phosphatase and having its origin in a sample derived from a human body. If required, said sample is subjected to a pretreatment so as to draw the phosphatase into solution and to remove any solid tissues. The solution is then treated by means of affinity chromatography, whereby the phosphatase in question is separated from other proteins. The chromatographic step is performed in a column packed with an agarose gel coupled with tartrate groups. A sodium acetate buffer containing tartrate may be used as an eluent and the eluate is collected as successive fractions. Those fractions containing the phosphatase are further treated by means of isoelectric focusing so as to separate the different isoenzymes of the phosphatase from each other. The isoelectric focusing may be performed either in a column or on a disc covered with a gel.

10 Claims, No Drawings

United States Patent [19]
Keyes
[11] **4,194,067**
[45] **Mar. 18, 1980**

[54] **PROCESS FOR THE PURIFICATION OF CARBOHYDRATE CONTAINING ENZYMES**

[75] Inventor: **Melvin H. Keyes**, Sylvania, Ohio

[73] Assignee: **Technicon Instruments Corp.**, Tarrytown, N.Y.

[21] Appl. No.: **929,477**

[22] Filed: **Jul. 31, 1978**

[51] **Int. Cl.**[2] **C07G 7/00**
[52] **U.S. Cl.** **435/190**; 435/192; 435/189; 435/262; 435/814
[58] **Field of Search** ..... 195/66 R, 4

[56] **References Cited**

PUBLICATIONS

Nakamura et al., in FEBS Letters, vol. 41, No. 2, pp. 327–330, May 1974.

Primary Examiner—Lionel M. Shapiro
Attorney, Agent, or Firm—S. P. Tedesco

[57] **ABSTRACT**

This invention relates to a method for purifying a carbohydrate containing enzyme which is a desired enzyme preferred to be separated from a mixture. The method comprises the steps of mixing a solution containing the carbohydrate containing enzyme with a carbohydrate modifying reagent. The carbohydrate modifying reagent reacts with the carbohydrate attached to the enzyme, thereby modifying its chemical structure. The modified enzyme is then separated from the other undesirable enzymes or proteins in the mixture by a suitable chemical separation method, for example, gel filtration chromatography. The method was used in the separation of glucose oxidase from catalase, a separation which by previous methods was very inefficient.

17 Claims, No Drawings

United States Patent [19]
Podolsky et al.
[11] **4,205,129**
[45] **May 27, 1980**

[54] **METHOD FOR PURIFYING GALACTOSYLTRANSFERASE ISOENZYMES AND PRODUCT**

[75] Inventors: **Daniel K. Podolsky**, Boston, Mass.; **Milton M. Weiser**, Buffalo, N.Y.

[73] Assignee: **The Massachusetts General Hospital**, Boston, Mass.

[21] Appl. No.: **17,288**

[22] Filed: **Mar. 5, 1979**

[51] **Int. Cl.**[2] **C07G 7/026**
[52] **U.S. Cl.** **435/193**; 435/815; 424/94
[58] **Field of Search** 435/193, 815; 424/94

[56] **References Cited**

PUBLICATIONS

Podolsky et al., Biochemical and Biophysical Research Communication, vol. 65, No. 2, pp. 545–551, Jul. 1975.

Primary Examiner—Lionel M. Shapiro
Attorney, Agent, or Firm—Thompson, Birch, Gauthier & Samuels

[57] **ABSTRACT**

Pure galactosyltransferase isoenzyme GT-II having a molecular weight of about 71,000 is obtained from malignant cells or tumors of animals and humans. The GT-II is isolated by subjecting a body fluid or extract of the malignant cells or tumors containing the isoenzyme and GT-I galactosyltransferase isoenzyme to serial column separation steps and utilizing materials in the column which resemble cofactors for galactosyltransferase GT-II.

6 Claims, 6 Drawing Figures

United States Patent [19]
Yanagi et al.
[11] **4,189,350**
[45] **Feb. 19, 1980**

[54] **PROCESS FOR PURIFYING UROKINASE**

[75] Inventors: **Hideki Yanagi**, Toyonaka; **Yasuo Bai**, Sakai; **Junichi Yoshikawa**; **Shigeo Ogino**, both of Nishinomiya, all of Japan

[73] Assignee: **Sumitomo Chemical Company, Limited**, Osaka, Japan

[21] Appl. No.: **911,475**

[22] Filed: **Jun. 1, 1978**

[30] **Foreign Application Priority Data**

Jun. 3, 1977 [JP] Japan 52-65975

[51] **Int. Cl.**[2] **C07G 7/026**
[52] **U.S. Cl.** **435/215**
[58] **Field of Search** ..... 195/66 B

[56] **References Cited**

U.S. PATENT DOCUMENTS

3,957,582	5/1976	Stried et al.	195/66 B
4,025,390	5/1977	Urakawa et al.	195/66 B

Primary Examiner—Lionel M. Shapiro
Attorney, Agent, or Firm—Stevens, Davis, Miller & Mosher

[57] **ABSTRACT**

A process for purifying urokinase by contacting a crude urokinase-containing solution with a strongly acidic cation exchanger having sulfonic acid groups and adjusted to the NH_4^+ type to adsorb urokinase on said cation exchanger and then eluting urokinase from said exchanger, characterized in that urea is previously added to the crude urokinase-containing solution in such a rate that the final molar concentration of urea in the solution is 3 to 8 M. This process is capable of providing purified urokinase having substantially constant and high specific activity from a crude urokinase-containing solution with a high recovery regardless of purity of the crude urokinase.

3 Claims, No Drawings

United States Patent [19]
Taubman et al.
[11] **4,250,262**
[45] **Feb. 10, 1981**

[54] **METHOD OF PREPARING A PURIFIED GLUCOSYLTRANSFERASE**

[75] Inventors: **Martin A. Taubman**, Newton; **Daniel J. Smith**, Natick, both of Mass.

[73] Assignee: **Forsyth Dental Infirmary for Children**, Boston, Mass.

[21] Appl. No.: **103,590**

[22] Filed: **Dec. 14, 1979**

Related U.S. Application Data

[60] Continuation of Ser. No. 956,847, Nov. 2, 1978, abandoned, which is a division of Ser. No. 879,432, Feb. 21, 1978, Pat. No. 4,150,116.

[51] **Int. Cl.**[3] **C12N 9/10**
[52] **U.S. Cl.** **435/193**; 435/815; 435/885
[58] **Field of Search** 435/193

[56] **References Cited**

U.S. PATENT DOCUMENTS

3,993,747 11/1976 Gaffar et al. 424/88

OTHER PUBLICATIONS

Taubman et al., The Journal of Immunology, vol. 118, No. 2, pp. 710-720 (Feb. 1977).
Guggenheim et al., Dental Plaque, pp. 287-296 (1970) McHugh ed., Dundee, Scotland.

Primary Examiner—Lionel M. Shapiro
Attorney, Agent, or Firm—Richard P. Crowley

[57] **ABSTRACT**

Immunization of animals with preparations containing more purified forms of glucosyltransferase (GTF) results in the presence of antibody in saliva demonstrable by functional inhibitions of enzyme activity and binding of radioactive enzyme. Serum antibody was also present. Immunized groups of animals had lower mean caries scores than comparably sham-immunized or nonimmunized control groups. Local immunization with GTF of serotype c or g of a *Streptococcus mutans* reduces the colonization, caries, and lesions caused by infection with *S. mutans* of serotype g (strain 6715) or c, or with serotype g or c, or with serotype a or g, respectively.

13 Claims, No Drawings

United States Patent [19]
Fujii et al.
[11] **4,252,902**
[45] **Feb. 24, 1981**

[54] **PROCESS FOR PURIFICATION OF CRUDE KALLIKREIN**

[75] Inventors: **Setsuro Fujii**, Toyonaka; **Kiyoaki Noda**, Takarazuka; **Akio Yokoshima**, Ikeda, all of Japan

[73] Assignee: **Toho Pharmaceutical Industries Co., Ltd.**, Osaka, Japan

[21] Appl. No.: **58,292**

[22] Filed: **Jul. 17, 1979**

[30] **Foreign Application Priority Data**

Jul. 25, 1978 [JP] Japan 53-91044

[51] **Int. Cl.**[3] **C12N 9/50**; C12N 9/94
[52] **U.S. Cl.** **435/186**; 435/188; 435/213; 435/226; 435/815
[58] **Field of Search** 435/186, 188, 212, 213, 435/219, 226, 803, 815; 424/110

[56] **References Cited**

U.S. PATENT DOCUMENTS

3,100,736 8/1963 Werle et al. 424/110
3,746,622 7/1973 Nishikawa et al. 435/213
3,912,595 10/1975 Philipp et al. 435/219
3,994,782 11/1976 Tokuyasu et al. 435/226
4,020,268 4/1977 Nishikawa et al. 435/815
4,064,010 12/1977 Harris et al. 435/803

FOREIGN PATENT DOCUMENTS

52-18883 2/1977 Japan 435/212

Primary Examiner—Peter A. Hruskoci
Attorney, Agent, or Firm—Berman, Aisenberg & Platt

[57] **ABSTRACT**

A process for purification of crude kallikrein utilizing a specific affinity of kallikrein to p-aminobenzamidine, which comprises bringing a solution, containing kallikrein and contaminated by other undesirable enzymes and proteins, into contact with a water-insoluble carrier combined with p-aminobenzamidine, exclusively eluting out the other enzymes and proteins from the carrier by the use of a buffer solution of lower NaCl concentration and then exclusively eluting out kallikrein by the use of a buffer solution of higher NaCl concentration.

7 Claims, No Drawings

United States Patent [19]
Winans
[11] **4,250,263**
[45] **Feb. 10, 1981**

[54] **METHOD OF PURIFICATION OF THERMALLY STABLE ENZYMES**

[75] Inventor: **Vida Winans**, Downers Grove, Ill.

[73] Assignee: **UOP Inc.**, Des Plaines, Ill.

[21] Appl. No.: **93,568**

[22] Filed: **Nov. 13, 1979**

[51] **Int. Cl.**[3] **C12N 9/92**
[52] **U.S. Cl.** **435/234**; 435/814; 435/827; 435/853; 435/886
[58] **Field of Search** 435/233, 234, 814, 183, 435/185-232

[56] **References Cited**

U.S. PATENT DOCUMENTS

3,948,728 4/1976 Roeschlau et al. 435/814

OTHER PUBLICATIONS

Yamanaka, "D-Xylose Isomerase" in Methods in Enzymology, vol. IX, pp. 588-593 (1966).

Primary Examiner—Lionel M. Shapiro
Attorney, Agent, or Firm—James R. Hoatson, Jr.; Raymond H. Nelson; William H. Page, II

[57] **ABSTRACT**

A composition comprising intracellular or extracellular glucose isomerase may be purified by a method comprising heat treatment at a temperature from about 40° C. to about 80° C. The resultant enzyme solution, when utilized to prepare an immobilized enzyme system, is operationally equivalent to glucose isomerase purified by the traditional physico-chemical methods.

6 Claims, No Drawings

United States Patent [19]
Stepanov et al.
[11] **4,264,738**
[45] **Apr. 28, 1981**

[54] **PROCESS FOR PURIFICATION OF PROTEOLYTIC ENZYMES**

[76] Inventors: **Valentin M. Stepanov**, ulitsa Chertanovskaya, 35, kv. 247; **Galina N. Rudenskaya**, ulitsa Tsandera 7, kv. 251, both of Moscow; **Valery K. Akparov**, ulitsa Lugovaya, 33, kv. 26, Fryazino, Moskovskoi oblasti; **Anatoly V. Gaida**, 3Dorozhny proezd, 5 korpus 2, kv. 45, Moscow, all of U.S.S.R.

[21] Appl. No.: **62,683**

[22] Filed: **Aug. 1, 1979**

[51] **Int. Cl.**[3] **C12N 9/56**; C12N 9/64
[52] **U.S. Cl.** **435/222**; 435/212; 435/213; 435/219; 435/223; 435/226; 435/815
[58] **Field of Search** 435/176, 212, 219-226, 435/815

[56] **References Cited**

U.S. PATENT DOCUMENTS

4,100,028 7/1978 Stepanov et al. ..... 435/815 X

FOREIGN PATENT DOCUMENTS

551339 6/1977 U.S.S.R. 435/212

Primary Examiner—Lionel M. Shapiro
Attorney, Agent, or Firm—Burgess, Ryan and Wayne

[57] **ABSTRACT**

A process for purification of proteolytic enzymes which comprises a biospecific sorption on a sorbent comprising a product of interaction of a solid carrier which is an aminoderivative of a siliceous material, a ligand and a condensation agent; elution of the sorbed enzymes by salt buffers and/or organic solvents.

10 Claims, No Drawings

United States Patent [19]

Leach et al.

[11] **4,235,970**

[45] **Nov. 25, 1980**

[54] **PROTEASE INACTIVATED α-AMYLASE PREPARATIONS**

[75] Inventors: **Harry W. Leach**, Willowbrook; **Ronald Hebeda**, Naperville, both of Ill.

[73] Assignee: **CPC International Inc.**, Englewood Cliffs, N.J.

[21] Appl. No.: **712,103**

[22] Filed: **Aug. 5, 1976**

[51] **Int. Cl.**[3] **C12N 9/28**

[52] **U.S. Cl.** **435/202**; 435/813; 435/836

[58] **Field of Search** ..... 195/63, 62, 64, 65, 195/66 R, 68, 121, 122, 125; 435/202

[56] **References Cited**

U.S. PATENT DOCUMENTS

2,683,682	7/1919	Miller et al.	195/66 R
3,039,936	6/1962	Lenney et al.	195/11
3,249,512	5/1966	Bode	435/96
3,303,102	2/1967	Armbruster	195/31 R
3,819,528	6/1974	Berry	195/63 X
3,912,590	10/1975	Slott et al.	195/31 R

FOREIGN PATENT DOCUMENTS

37-16696	10/1962	Japan .	
269889	8/1970	U.S.S.R.	195/65

Primary Examiner—Lionel M. Shapiro

[57] **ABSTRACT**

Protease enzyme impurities contained in bacterial α-amylase enzyme preparations are inactivated by a mild heat treatment in the presence of a protective material. Useful protective materials include calcium and starch hydrolysates such as corn syrup. The protease-free α-amylase can then be used to solubilize starch materials by various granular starch and conventional processes. Hydrolysates obtained contain significantly less soluble protein than those prepared using untreated α-amylases. A preferred α-amylase enzyme preparation is one derived from a *Bacillus licheniformis* microorganism.

4 Claims, No Drawings

United States Patent [19]

Dawson et al.

[11] **4,228,240**

[45] *** Oct. 14, 1980**

[54] **STABILIZATION OF PEROXIDASE**

[75] Inventors: **Edward C. Dawson**, Berghem; **Jan D. H. Homan**, Oss; **Bauke K. Van Weemen**, Oss, all of Netherlands

[73] Assignee: **Akzona Incorporated**, Asheville, N.C.

[*] Notice: The portion of the term of this patent subsequent to Sep. 25, 1996, has been disclaimed.

[21] Appl. No.: **6,934**

[22] Filed: **Jan. 25, 1979**

Related U.S. Application Data

[63] Continuation of Ser. No. 831,817, Sep. 9, 1977, Pat. No. 4,169,012.

[30] **Foreign Application Priority Data**

Sep. 24, 1976 [NL] Netherlands 7610608

[51] **Int. Cl.**[2] **C07G 7/02**; G01N 31/14

[52] **U.S. Cl.** **435/188**; 435/7; 435/28; 435/192

[58] **Field of Search** ..... 195/63, 68, 103.5 R, 195/99, 103.5 A, 103.5 C; 435/188, 192, 7, 28

[56] **References Cited**

U.S. PATENT DOCUMENTS

Re. 29,169	4/1977	Schuurs et al.	195/103.5 A
2,990,338	6/1961	Gibson	195/103.5 C
3,019,171	1/1962	Bloch et al.	195/63 X
3,367,842	2/1968	Rupe et al.	195/103.5 C
3,413,198	11/1968	Deutsch	195/63 X
3,912,593	10/1975	Barker et al.	195/63 X
3,953,295	4/1976	Monte et al.	195/63 X

Primary Examiner—David M. Naff
Attorney, Agent, or Firm—Robert H. Falk; Charles A. Wendel; Francis W. Young

[57] **ABSTRACT**

New and useful stable peroxidase compositions are disclosed which are particularly useful as reagents in enzyme immunoassay (EIA) tests. The novel peroxidase compositions contain polyvalent ions of groups 3 and 4 of the Periodic Table. These novel compositions are stable even at low concentrations of peroxidase, and are relatively invulnerable to freeze-drying. Preferably, the polyvalent ions selected are those of Al, Zn, Mg, Fe, and Cu.

12 Claims, No Drawings

United States Patent [19]

Mann

[11] **4,232,124**

[45] **Nov. 4, 1980**

[54] **METHOD OF PRODUCING PLASMINOGEN ACTIVATOR**

[76] Inventor: **George F. Mann**, 117 Venner Rd., London, England, SE26

[21] Appl. No.: **32,218**

[22] Filed: **Apr. 23, 1979**

Related U.S. Application Data

[63] Continuation of Ser. No. 839,433, Oct. 5, 1977, abandoned.

[51] **Int. Cl.**[3] **C12N 9/72**; C12N 9/48

[52] **U.S. Cl.** **435/212**; 435/215

[58] **Field of Search** 435/212, 215, 217

[56] **References Cited**

U.S. PATENT DOCUMENTS

3,128,228	4/1964	Michl	195/1.8
3,904,480	9/1975	Hull et al.	195/66 B
3,930,945	1/1976	Lewis	195/1.7

OTHER PUBLICATIONS

Bernick et al., The Journal of Clinical Investigation vol. 48 (1969) pp. 1740–1753.

Barlow et al. "Production of Plasminogen Activator by Tissue Culture" in Proteases and Biological Control, Cold Spring Harbor Conference on Cell Proliferation vol. 2, 1975 pp. 325–331.

Primary Examiner—Lionel M. Shapiro
Attorney, Agent, or Firm—Fidelman, Wolffe & Waldron

[57] **ABSTRACT**

Production of plasminogen activator from human diploid lung cells through cultivation in an aqueous nutrient medium containing an inducer of activator production.

Lactalbumin hydrolysate is an active inducer, and is used in 0.1–1.0% w/v concentration in the medium.

6 Claims, No Drawings

United States Patent [19]

Stein et al.

[11] **4,241,185**

[45] **Dec. 23, 1980**

[54] **METHOD OF STABILIZING α-GALACTOSIDASE**

[75] Inventors: **Brooks M. Stein**, Berthoud; **James C. Linden**, Loveland, both of Colo.

[73] Assignee: **The Great Western Sugar Company**, Denver, Colo.

[21] Appl. No.: **14,579**

[22] Filed: **Feb. 23, 1979**

[51] **Int. Cl.**[3] **C12N 9/96**; C12N 9/40

[52] **U.S. Cl.** **435/188**; 435/99; 435/174; 435/208

[58] **Field of Search** 435/94, 99, 176, 174, 435/177, 182, 188, 276, 911, 208

[56] **References Cited**

U.S. PATENT DOCUMENTS

3,647,625	3/1972	Suzuki et al.	435/276
3,666,627	5/1972	Messing	435/176
3,779,869	12/1973	Zienty	435/174
3,843,442	10/1974	Moskowitz	435/94
3,957,580	5/1976	Nelson	435/174 X

Primary Examiner—David M. Naff
Attorney, Agent, or Firm—Dennis K. Shelton; Bruce G. Klaas

[57] **ABSTRACT**

The activity of mycelial bound α-galactosidase is stabilized by treating α-galactosidase containing mycelia with about 5 to about 25 percent by weight glutaraldehyde based upon the dry weight of the mycelia. The glutaraldehyde treated mycelia may be used in the hydrolysis of oligosaccharides containing α-galactoside linkage without incurring substantial α-galactosidase activity loss during hydrolysis.

5 Claims, No Drawings

IMMOBILIZED ENZYMES

This profile includes immobilized or carrier-bound enzymes or microbial cells and processes for preparing them. Immobilization results when the enzyme or microbial cell is covalently or ionically bonded to a carrier or entrapped within a carrier. The carrier material physically confines the enzyme or microbial cell during a continuous process or enhances recoverability in a batch process. Examples of immobilized enzymes are enzymes chemically or physically bonded to a water-insoluble matrix, enzymes contained within a polymer or gel, and enzymes adsorbed on a resin.

INCLUDED IN THIS PROFILE ARE ALL OF THE PATENTS FROM:

Class 435, Subclasses 174-182

ACTIVITY INDICES (1979-1981)

GROWTH	33.2%
FOREIGN SHARE	54.2%
CORPORATE OWNED	91.0%
GOVERNMENT OWNED	5.2%
U.S. OWNED OF FOREIGN	11.9%

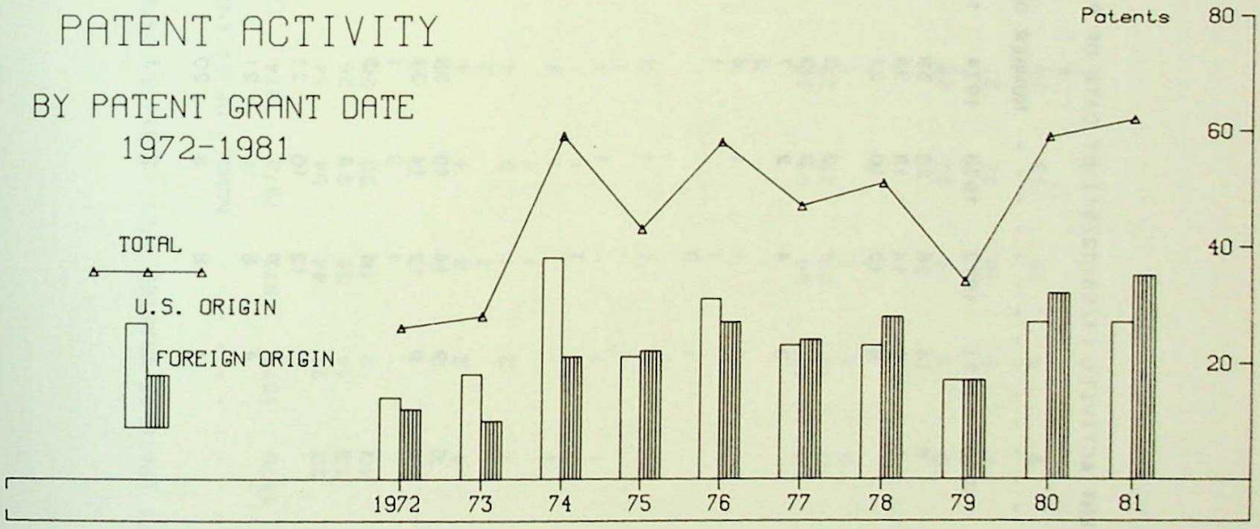

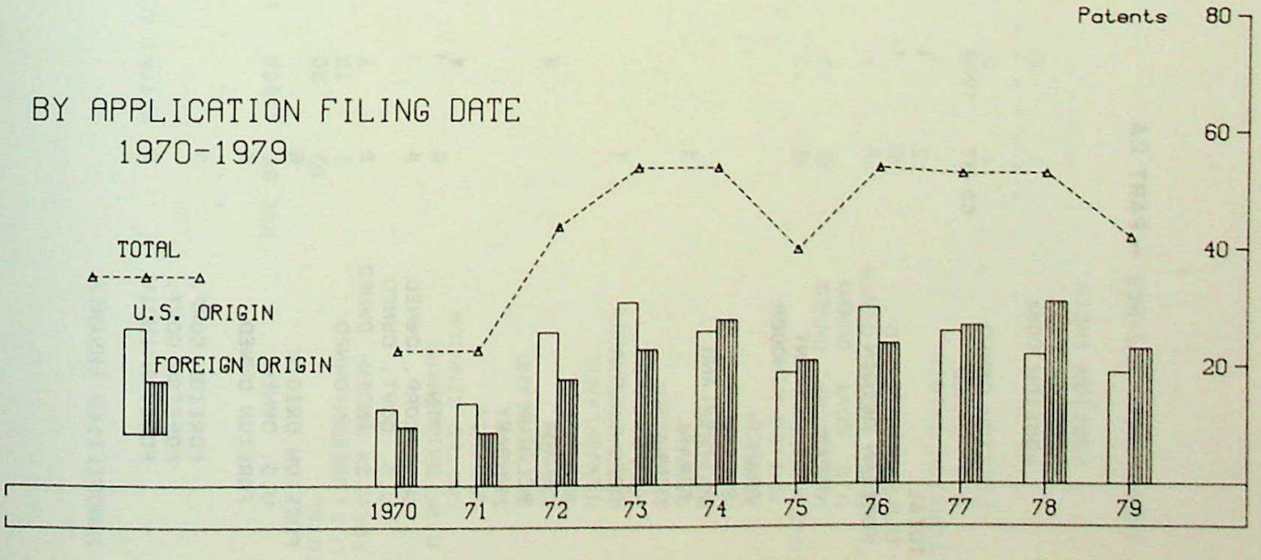

IMMOBILIZED ENZYMES - PART 2A

PATENT ACTIVITY (1/63-12/81) BY DATE OF PATENT GRANT

	NUMBER OF PATENTS															
	63-67	1968	1969	1970	1971	1972	1973	1974	1975	1976	1977	1978	1979	1980	1981	TOTAL
TOTAL	12	1	2	6	14	26	28	59	43	58	47	51	34	59	62	502
U.S. ORIGIN	6	1	2	6	9	14	18	38	21	31	23	23	17	27	27	263
FOREIGN ORIGIN	6				5	12	10	21	22	27	24	28	17	32	35	239
JAPAN	2					1	2	3	7	11	4	10	7	12	16	75
WEST GERMANY	1				1		3	3	2	4	3	5	2	8	8	40
UNITED KINGDOM					3	4	2	7	8	1	3	3	2	3	1	37
FRANCE								2		2	5	1	2	4	2	18
SWEDEN						1	1	4	1	2	5		1		1	16
SWITZERLAND						1		1		1	1	4	1	4		13
ISRAEL	2				1	3			1	1	1	1			1	11
DENMARK									1	1	1	1			2	6
NETHERLANDS						1	1	1	1					1	1	6
CZECHOSLOVAKIA	1									1		2			1	5
ITALY							1			1	1	1				4
AUSTRALIA						1				1						2
CANADA													1		1	2
BELGIUM													1		1	2
HUNGARY									1							1
AUSTRIA										1						1
U.S. ORIGIN	6	1	2	6	9	14	18	38	21	31	23	23	17	27	27	263
U.S. CORP. OWNED	4	1	1	4	9	12	14	34	19	29	18	16	10	25	25	221
U.S. GOVT. OWNED						1	3	1	1	1	1	5	2	1	1	17
U.S. INDIV. OWNED	2			1		1		3	1	1	4	2	3	1	1	20
FOREIGN OWNED			1	1			1						2			5
FOREIGN ORIGIN	6				5	12	10	21	22	27	24	28	17	32	35	239
U.S. OWNED					1	4			1	2		2	1	5	4	20
FOREIGN OWNED	6				4	8	10	21	21	25	24	26	16	27	31	219
FOREIGN CORP.	3				4	8	8	20	19	19	22	24	16	25	28	196
FOREIGN GOVT.										2		1		2	2	7
FOREIGN INDIV.	3						2	1	2	4	2	1			1	16

IMMOBILIZED ENZYMES

PATENT ACTIVITY (PATENTS GRANTED 1/67-12/81) BY DATE OF PATENT APPLICATION

	NUMBER OF PATENTED APPLICATIONS															
	PRE 68	1968	1969	1970	1971	1972	1973	1974	1975	1976	1977	1978	1979	1980	1981	TOTAL
TOTAL	10	20	11	23	23	44	54	54	40	54	53	53	42	10		491
U.S. ORIGIN	9	13	5	13	14	26	31	26	19	30	26	22	19	4		257
FOREIGN ORIGIN	1	7	6	10	9	18	23	28	21	24	27	31	23	6		234
JAPAN	1		2	1	1	2	7	9	7	7	13	10	10	4		74
WEST GERMANY				2	2	3	6	1	3	2	6	9	4	1		39
UNITED KINGDOM		4	1	4	2	8	4	4	2	3	1	2	2			37
FRANCE						2		3	3	3	2	4	1			18
SWEDEN				1	2	1	3	4	3			2				16
SWITZERLAND			1			1	1		1	4	3	2				13
ISRAEL		3		1			1	2		1			1			9
DENMARK							1	1		1	1		2			6
NETHERLANDS			1	1	1			1				1	1			6
CZECHOSLOVAKIA								1	1	1			1			4
ITALY			1					1		2						4
AUSTRALIA					1				1							2
CANADA												1		1		2
BELGIUM											1		1			2
HUNGARY						1										1
AUSTRIA								1								1
U.S. ORIGIN	9	13	5	13	14	26	31	26	19	30	26	22	19	4		257
U.S. CORP. OWNED	6	12	5	10	12	23	29	23	14	23	19	19	18	4		217
U.S. GOVT. OWNED				3	1	1		1	1	5	3	2				17
U.S. INDIV. OWNED	1	1				2	2	2	4	2	2	1	1			18
FOREIGN OWNED	2				1						2					5
FOREIGN ORIGIN	1	7	6	10	9	18	23	28	21	24	27	31	23	6		234
U.S. OWNED		2	2	1			1	1	1	2	3	2	5			20
FOREIGN OWNED	1	5	4	9	9	18	22	27	20	22	24	29	18	6		214
FOREIGN CORP.	1	5	3	9	8	16	19	24	16	21	23	28	16	5		194
FOREIGN GOVT.								2	1	1		1	2			7
FOREIGN INDIV.			1		1	2	3	1	3		1			1		13

IMMOBILIZED ENZYMES

Organizational Patenting: Ranked

NO. OF PATENTS	ASSIGNEES WITH 4 OR MORE PATENTS (1969-1981)
35	CORNING GLASS WORKS
14	MONSANTO CO.
14	CPC INTERNATIONAL INC.
12	STANDARD BRANDS INC.
12	TANABE SEIYAKU CO. LTD.
11	UOP INC.
10	AMERICAN CYANAMID CO.
10	UNITED STATES OF AMERICA, AGRICULTURE
9	BOEHRINGER MANNHEIM GMBH
9	OWENS-ILLINOIS INC.
9	BAYER AKTIENGESELLSCHAFT
8	W.R. GRACE & CO.
8	MILES LABORATORIES INC.
7	BEECHAM GROUP LTD.
6	R.J. REYNOLDS TOBACCO CO.
5	RHONE POULENC INDUSTRIES
5	JAPAN ATOMIC ENERGY RESEARCH INSTITUTE
5	KOCH-LIGHT LABORATORIES LTD.
5	NATIONAL RESEARCH DEVELOPMENT CORP.
5	RANKS HORIS MCDOUGALL LTD.
5	RESEARCH CORP.
5	MITSUBISHI CHEMICAL INDUSTRIES LTD.
5	PFIZER INC.
5	PROCTER & GAMBLE CO.
5	SYVA CO.
5	NOVO INDUSTRI A/S
4	EXXON RESEARCH & ENGINEERING CO.
4	EXPLOATERINGS AKTIEBOLAGET T.B.F.
4	AGENCE NATIONALE DE VALORISATION DE LA RECHERCHE (ANVAR)
4	BAXTER TRAVENOL LABORATORIES INC.
4	TECHNICON INSTRUMENTS CORP.
4	YEDA RESEARCH AND DEVELOPMENT CO., LTD.
4	CESKOSLOVENSKA AKADEMIE VED
4	PURDUE RESEARCH FOUNDATION
4	IMPERIAL CHEMICAL INDUSTRIES LTD.
4	GIST-BROCADES N.V.
4	PENICK & FORD LTD.
4	ROHM GMBH
4	SUMITOMO CHEMICAL CO., LTD.

ORGANIZATIONAL PATENTING (1/69-12/81) - - ALPHA LISTING

ABBOTT LABORATORIES
4070246 - REACTIVE MATRICES

AB STADEX
3996107 - ENZYMATIC PRODUCTION OF A STARCH CONVERSION PRODUCT HAVING A HIGH MALTOSE CONTENT

A. E. STALEY MANUFACTURING COMPANY
3956066 - GLUCOSE ISOMERIZING ENZYME

AGENCE NATIONALE DE VALORISATION DE LA RECHERCHE (ANVAR)
3753858 - METHOD OF CONVERTING GLUCOSE INTO FRUCTOSE
3933587 - METHOD FOR PRODUCTION OF IMMOBILIZED ENZYME
3950222 - METHOD OF IMMOBILIZING ENZYMES TO MICROBIAL CELLS
4004979 - PREPARATION OF ACTIVE PROTEINS CROSS-LINKED TO INACTIVE PROTEINS

AGENCY OF INDUSTRIAL SCIENCE & TECHNOLOGY
4160698 - ENZYME IMMOBILIZATION WITH AZIDO COMPOUNDS
4269941 - METHOD FOR ENZYME IMMOBILIZATION

AJINOMOTO COMPANY INCORPORATED
3985617 - IMMOBILIZATION OF BIOLOGICALLY ACTIVE PROTEINS WITH A POLYPEPTIDE AZIDE
4297173 - METHOD FOR DETERMINING AMMONIA AND SENSOR THEREFOR
4299669 - METHOD FOR DETERMINING THE CONCENTRATION OF AN L-AMINO ACID IN FERMENTATION

AKTIEBOLAGET FERMENTA
4246346 - ANTIBIOTIC AND STEROID TRANSFORMATION PROCESS

AKZONA INCORPORATED
4292403 - DETECTION AND/OR DETERMINATION OF IGM, IGA, IGD AND IGE IMMUNOGLOBULINS

AMERACE CORPORATION
4102746 - IMMOBILIZED PROTEINS
4169014 - METHOD OF IMMOBILIZING PROTEINACEOUS SUBSTANCES

AMERICAN CYANAMID COMPANY
3730841 - ENCAPSULATED CARRIER BOUND ENZYMES
3753861 - BINDING ENZYMES TO CARBONYL POLYMERS
3766013 - PREPARATION OF WATER-INSOLUBLE CARRIER BOUND ENZYMES
3770588 - STORAGE STABILIZATION OF CARRIER BOUND ENZYMES
3770700 - NOVEL CARBONYL POLYMERS
3791927 - ENTRAPPED CARRIER BOUND ENZYMES
3809605 - FIBROUS MATS AND SHEETS CONTAINING IMMOBILIZED ENZYMES ENTRAPPED IN THEIR INTERSTICES
3809616 - DETECTING ANTI-CHOLINESTERASE MATERIALS
3847743 - ENZYMES BOUND TO CARBONYL POLYMERS
3867258 - LACTATE DEHYDROGENASE TEST MATERIAL

AMICON CORPORATION
3639306 - ENCAPSULATING PARTICLES AND PROCESS FOR MAKING SAME

ANHEUSER-BUSCH, INCORPORATED
3813320 - METHODS OF MAKING GLUCOSE ISOMERASE AND OF COVERTING GLUCOSE TO FRUCTOSE
4208482 - IMMOBILIZATION OF GLUCOSE ISOMERASE
4242451 - METHOD OF TREATMENT OF FLOCCULATED HOMOGENATE OF MICROBIAL CELLS CONTAINING GLUCOSE ISOMERASE

ASAHI KASEI KOGYO KABUSHIKI KAISHA
3875008 - HOLLOW FILAMENT CONTAINING ENZYMES AND/OR MICROORGANISMS

ORGANIZATIONAL PATENTING (1/69-12/81) - - ALPHA LISTING

ASAHI KASEI KOGYO KABUSHIKI KAISHA (CONTINUED)
4246351 - PROTEIN ADSORBENT

ASPRO-NICHOLAS LIMITED
3794563 - PREPARATION OF IMMOBILIZED ENZYMES

BASF AKTIENGESELLSCHAFT
4235973 - MACROPOROUS POLYMERIC CARRIER FOR COVALENTLY BINDING PROTEINS, ITS PREPARATION AND ITS USE FOR FIXING ACTIVE PROTEINS
4266030 - MACROPOROUS POLYMERIC CARRIER FOR COVALENTLY BINDING PROTEINS, ITS PREPARATION AND ITS USE FOR FIXING ACTIVE PROTEINS

BATTELLE MEMORIAL INSTITUTE
4016044 - METHOD AND APPARATUS FOR GOVERNING THE REACTION RATE OF ENZYMATIC REACTIONS
4066505 - PROCESS FOR EXTRACTING A POLYPEPTIDE FROM AN AQUEOUS SOLUTION
4088538 - REVERSIBLY PRECIPITABLE IMMOBILIZED ENZYME COMPLEX AND A METHOD FOR ITS USE

BAXTER TRAVENOL LABORATORIES, INC.
3639213 - STREPTOKINASE CHEMICALLY BONDED TO A CARBOHYDRATE MATRIX
3708397 - SYRUP CONVERSION WITH IMMOBILIZED GLUCOSE ISOMERASE
3843442 - IMMOBILIZED GLUCOSE ISOMERASE
3876501 - BINDING ENZYMES TO ACTIVATED WATER-SOLUBLE CARBOHYDRATES

BAYER AKTIENGESELLSCHAFT
3630841 - PURIFICATION OF ENZYME INHIBITORS
3834990 - ISOLATION OF ENZYMES AND ENZYME INHIBITORS
3871964 - WATER-INSOLUBLE PEPTIDE MATERIALS
3910825 - WATER-INSOLUBLE PEPTIDE MATERIALS
3930949 - PROCESS FOR THE PRODUCTION OF 7-AMINO-DELTA\3/ -CEPHEM DERIVATIVES
4035234 - PROCESS FOR THE PREPARATION OF THE KALLIKREIN-TRYPSIN INHIBITOR
4167446 - WATER SOLUBLE CARRIER-BOUND PENICILLINACYLASE
4195128 - POLYMERIC CARRIER BOUND LIGANDS
4298395 - ACTIVATED POLYMERIC CARRIERS

BECKMAN INSTRUMENTS INC.
3574062 - METHOD OF IMMOBILIZING ENZYMES AND PRODUCT

BEECHAM GROUP LIMITED
3883394 - WATER-INSOLUBLE PENICILLIN ACYLASE
3887432 - 6-AMINOPENICILLANIC ACID PREPARATION
4001264 - ENZYME COMPLEXES AND THEIR USE
4055635 - FIBRINOLYTIC COMPOSITIONS
4152210 - BIOLOGICALLY ACTIVE MATERIALS ATTACHED TO A FERROMAGNETIC SUPPORT
4230804 - WATER-INSOLUBLE PENICILLIN ACYLASE PREPARATION
4267273 - ENZYME PREPARATION HAVING AFFINITY FOR WATER-IMMISCIBLE LIQUIDS

BEHRINGWERKE AKTIENGESELLSCHAFT
4066581 - PROCESS FOR PRODUCING A BOND BETWEEN POLYVINYLENE GLYCOL AND A SUBSTANCE CONTAINING PRIMARY AMINO GROUPS
4118349 - PROCESS FOR THE MANUFACTURE OF POLYSTYRENE LATEX COMPOUNDS

BIORESEARCH LIMITED
4028183 - PROCESS OF PREPARING DOUBLE SALTS OF S-ADENOSYL-L-METHIONINE

BOARD OF REGENTS OF THE UNIVERSITY OF NEBRASKA
4279998 - REGENERABLE INSOLUBLE SUPPORT FOR PROTEIN IMMOBILIZATION

BOEHRINGER INGELHEIM, GMBH
4182655 - ENZYME IMMOBILIZATION WITH A PROTEIN CARRIER

IMMOBILIZED ENZYMES

ORGANIZATIONAL PATENTING (1/69-12/81) - - ALPHA LISTING

BOEHRINGER MANNHEIM G.M.B.H.
3711574 - COPOLYMERS OF ACRYLAMIDE
3775253 - WATER-INSOLUBLE CARRIER-BOUND PROTEINS
3806417 - CARRIER-BOUND ENZYME PREPARED BY REACTING AN ENZYME WITH A COMPOUND CONTAINING AN EPOXY GROUP AND AN UNSATURATED DOUBLE BOND AND THEN
3935071 - PROCESS FOR THE CONVERSION OF GLUCOSE INTO GLUCONIC ACID
3969287 - CARRIER-BOUND PROTEIN PREPARED BY REACTING THE PROTEIN WITH AN ACYLATING OR ALKYLATING COMPOUND HAVING A CARRIER-BONDING GROUP AND REACTING THE PRODUCT WITH A CARRIER
4038140 - PROCESS FOR BINDING BIOLOGICALLY ACTIVE PROTEINS
4081329 - PREPARATION OF CARRIER-BOUND MACROMOLECULAR COMPOUNDS
4119589 - PROCESS FOR FIXING PROTEINS ONTO CARRIERS
4182695 - POLYAMIDE-FIXED BIOLOGICALLY ACTIVE PROTEIN

BYK MALLINCKRODT CHEMISCHE PRODUKTE GMBH
4273865 - INSOLUBILIZED BIOCHEMICAL MATERIALS

CCI LIFE SYSTEMS, INC., MESNE
3989622 - UREASE IN INSOLUBLE FORM FOR CONVERTING UREA PRESENT IN A LIQUID

CESKOSLOVENSKA AKADEMIE VED
3964973 - PREPARATION OF INSOLUBLE BIOLOGICALLY ACTIVE COMPOUNDS
4085005 - METHOD OF PREPARATION OF INSOLUBLE BIOLOGICALLY ACTIVE COMPOUNDS
4087598 - MERCURATED POLYMERS, METHOD FOR THEIR PREPARATION AND POLYMERS PRODUCED THEREFROM
4245064 - ACTIVATED SOLID CARRIER AND A METHOD OF ITS PREPARATION

CHILDREN S HOSPITAL MEDICAL CENTER
4040908 - POLAROGRAPHIC ANALYSIS OF CHOLESTEROL AND OTHER MACROMOLECULAR SUBSTANCES

CHINOIN GYOGYSZER ES VEGYESZETI TERMEKEK GYARA RT.
3875003 - PROCESS FOR THE PREPARATION OF PROSTAGLANDIN

CHOAY S.A.
4039382 - IMMOBILIZED RIBONUCLEASE AND ALKALINE PHOSPHATASE

COMMUNITY BLOOD COUNCIL OF GREATER NEW YORK, INC.
3994870 - PURIFICATION OF HEPATITIS B SURFACE ANTIGEN

CORNING GLASS WORKS
3519538 - CHEMICALLY COUPLED ENZYMES
3556945 - ENZYME STABILIZATION
3652761 - IMMUNOCHEMICAL COMPOSITES AND ANTIGEN OR ANTIBODY PURIFICATION THEREWITH
3666627 - METHOD OF STABILIZING ENZYMES
3716456 - ANION MONITORING SYSTEM
3767535 - METHOD OF REACTING AN INSOLUBILIZED ENZYME IN A FLUID MEDIUM
3783101 - ENZYMES BOUND TO CARRIERS HAVING A METAL OXIDE SURFACE LAYER
3802997 - METHOD OF STABILIZING ENZYMES
3804719 - ADSORBING AND CROSSLINKING ENZYMES WITHIN THE PORES OF POROUS GLASS
3839154 - APPARATUS AND METHOD FOR MEASURING CONDUCTIVITY CHANGE IN A GLUCOSE-GLUCOSE OXIDASE REACTION
3841971 - SYNERGISTIC ENZYMES ADSORBED WITHIN POROUS INORGANIC CARRIERS
3850751 - ENZYMES IMMOBILIZED ON POROUS INORGANIC SUPPORT MATERIALS
3852496 - TREATMENT OF WHEY WITH IMMOBILIZED LACTASE AND GLUCOSE ISOMERASE
3868304 - METHOD OF MAKING FRUCTOSE WITH IMMOBILIZED GLUCOSE ISOMERASE
3886080 - CHELATING AGENTS COUPLED TO INORGANIC CARRIERS AND METHOD OF PREPARING
3910823 - IMMOBILIZATION OF UREASE ON POROUS TITANIA
3915804 - APPARATUS AND METHOD FOR MEASURING CONDUCTIVITY CHANGE IN A UREA-UREASE REACTION
3930951 - BONDING ENZYMES TO POROUS INORGANIC CARRIERS

ORGANIZATIONAL PATENTING (1/69-12/81) - - ALPHA LISTING

CORNING GLASS WORKS (CONTINUED)

3939041 - METHOD OF MAKING FRUCTOSE
3965035 - ENZYME CARRIER REGENERATION
3982997 - IMMOBILIZED GLUCOSE ISOMERASE
3983000 - BONDING PROTEINS TO INORGANIC SUPPORTS
3992329 - SUPPORT OF ALUMINA-MAGNESIA FOR THE ADSORPTION OF GLUCOSE ISOMERASE ENZYMES
4002576 - ENZYME CARRIER REGENERATION
4010076 - REACTOR FOR STABILIZED MICROBES HAVING PHOTOMETABOLIC ACTIVITY
4071409 - IMMOBILIZATION OF PROTEINS ON INORGANIC SUPPORT MATERIALS
4072566 - IMMOBILIZED BIOLOGICALLY ACTIVE PROTEINS
4087330 - IMMOBILIZATION OF ENZYMES USING RECYCLED SUPPORT MATERIALS
4149936 - HIGH SURFACE LOW VOLUME FUNGAL BIOMASS COMPOSITE
4149937 - HIGH SURFACE LOW VOLUME YEAST BIOMASS COMPOSITE
4153510 - HIGH SURFACE LOW VOLUME BIOMASS COMPOSITE
4246349 - STABILIZATION OF IMMOBILIZED BACTERIA
4254218 - DETECTING NEISSERIA VIA IMMOBILIZED ANTIBODY-ENZYME COMPLEX
4282315 - PREPARATION OF ENRICHED WHOLE VIRUS RADIOLIGAND
4286061 - METHOD FOR CONTINUOUS CULTURING OF MICROBES

CPC INTERNATIONAL INC.

3813318 - PRODUCTION OF XYLOSE (DEXTROSE) ISOMERASE ENZYME PREPARATIONS
3826714 - THERMOPHILIC GLUCOSE ISOMERASE ENZYME PREPARATION
3847740 - PROCESS FOR THE PRODUCTION OF LEVULOSE-BEARING SYRUPS
3847741 - TEMPERATURE-PROGRAMMED PROCESS FOR THE PRODUCTION OF LEVULOSE-BEARING SYRUPS
3935070 - PRODUCTION OF SWEET SYRUP FROM DEXTROSE MOTHER LIQUOR
3956065 - INERT, NON-POROUS GRANULES FOR FLOW CONTROL IN A PLUG FLOW REACTOR
3960663 - PROCESS FOR THE CONTINUOUS ISOMERIZATION OF DEXTROSE
4132595 - DEXTROSE PRODUCTION WITH IMMOBILIZED GLUCOAMYLASE
4144127 - PROCESS FOR IMMOBILIZING GLUCOSE ISOMERASE
4202939 - GLUCOAMYLASE IMMOBILIZED ON CATIONIC COLLOIDAL SILICA
4226937 - METHOD USING GLUCOAMYLASE IMMOBILIZED ON POROUS ALUMINA
4252899 - PROCESS FOR IMMOBILIZING GLUCOSE ISOMERASE AND A METHOD OF CONTINUOUS ISOMERIZATION OF GLUCOSE
4259445 - IMMOBILIZED ENZYME CATALYST
4263400 - IMMOBILIZED ENZYMES

DAMON CORPORATION

4257884 - CHROMATOGRAPHY

DDS KROYER A/S

3910820 - METHOD OF MAKING STARCH HYDROLYSATES BY ENZYMATIC HYDROLYSIS

DENKI KAGAKU KOGYO KABUSHIKI KAISHA

3915797 - IMMOBILIZED ENZYMES
4205128 - PROCESS FOR PRODUCING IMMOBILIZED ENZYME COMPOSITIONS

DIAMOND SHAMROCK (POLYMERS) LIMITED

4217417 - RESIN CHELATES

DIRECTOR GENERAL OF AGENCY OF INDUSTRIAL SCIENCE AND TECHNOL

4307151 - ENZYME-ACTIVE FIBROUS MATERIALS AND METHOD FOR PREPARING SAME

DIRECTOR OF NATIONAL FOOD RESEARCH INSTITUTE

3962038 - PREPARATION OF WATER-INSOLUBLE ENZYMES
4001082 - METHOD OF ISOMERIZING GLUCOSE WITH ENZYME IMMOBILIZED WITHIN MICROBIAL CELL
4025391 - PREPARATION OF BEAD-SHAPED IMMOBILIZED ENZYME

ORGANIZATIONAL PATENTING (1/69-12/81) - - ALPHA LISTING

DOW CHEMICAL COMPANY
4210723 - METHOD OF COUPLING A PROTEIN TO AN EPOXYLATED LATEX
4246350 - PROTEIN IMMOBILIZATION ON CHELATING RESINS

DR. EDUARD FRESENIUS CHEMISCH-PHARMAZEUTISCHE INDUSTRIE KG.
4261828 - APPARATUS FOR THE DETOXIFICATION OF BLOOD

DYNAMIT NOBEL AKTIENGESELLSCHAFT
4188263 - CARRIER-BOUND ACYLASES
4271269 - REGENERATION OF AN ENZYME IMMOBILIZATE

E. I. DU PONT DE NEMOURS AND COMPANY
3788950 - ENZYME GEL AND USE THEREFOR

ENGELHARD MINERALS & CHEMICALS CORPORATION
3953292 - ENZYMES BOUND TO HEAT-ACTIVATED ATTAPULGITE CLAY

ENZYME TECHNOLOGY, INC.
4267270 - METHOD FOR THE DETERMINATION OF ANTIGENS AND ANTIBODIES USING SITE-DEACTIVATING MEDIA

ETABLISSEMENT DECLARE D'UTILITE PUBLIQUE DIT: INSTITUT PAS
4193982 - PROCESS FOR COUPLING BIOLOGICAL SUBSTANCES BY COVALENT BONDS
4241176 - MAGNETIC GEL SUITABLE TO IMMUNOENZYMATIC DETERMINATIONS

EXPLOATERINGS AKTIEBOLAGET T.B.F.
3847745 - PREPARATION OF WATER-INSOLUBLE BIOLOGICALLY ACTIVE MATERIALS
3853708 - COUPLING BIOLOGICALLY ACTIVE SUBSTANCES TO OXIRANE-CONTAINING POLYMERS
3959251 - STABILIZED AGAR PRODUCT AND METHOD FOR ITS STABILIZATION
4048416 - THIOPOLYMERS, THEIR DERIVATIVES AND METHODS FOR THEIR PREPARATION AND USE

EXXON RESEARCH + ENGINEERING CO.
3830699 - INSOLUBILIZED ENZYMES
3897308 - IMMOBILIZED ENZYMES AND METHOD FOR PREPARATION
3970521 - IMMOBILIZED GLYCOENZYMES
4201691 - LIQUID MEMBRANE GENERATOR

FRAUNHOFER-GESELLSCHAFT ZUR FORDERUNG DER ANGEWANDTEN FORSCH
4243692 - PROCESS FOR THE PRODUCTION OF SILICIC ACID HETEROPOLYCONDENSATES USEFUL AS COATING MATERIALS

FUJI PHOTO FILM CO., LTD
3746621 - PREPARATION OF ENZYME-CONTAINING MICROCAPSULE

GIST-BROCADES N.V.
3838007 - WATER-INSOLUBLE ENZYME COMPOSITION
3912593 - WATER-INSOLUBLE NITROGEN-CONTAINING BIOLOGICALLY ACTIVE ORGANIC SUBSTANCES
4155813 - FERMENTATION PROCESS
4242219 - NOVEL ENZYME PARTICLES AND THEIR PREPARATION

GIVAUDAN CORPORATION
4066504 - ALIPHATIC DIALDEHYDE-AROMATIC POLYAMINE CONDENSATION PRODUCTS BOUND TO PROTEINS AND ENZYMES
4184986 - NOVEL CONDENSATION PRODUCTS HAVING HIGH ACTIVITY TO INSOLUBILIZE PROTEINS AND PROTEIN-INSOLUBILIZED PRODUCTS
4186053 - INSOLUBILIZED ENZYME PRODUCT

GLAXO LABORATORIES LIMITED
3801458 - PROCESS FOR PREPARING CEPHALOSPORIN DERIVATIVES
3880713 - CEPHALOSPORIN COMPOUNDS

ORGANIZATIONAL PATENTING (1/69-12/81) - - ALPHA LISTING

GREAT WESTERN SUGAR COMPANY
4241185 - METHOD OF STABILIZING +6O -GALACTOSIDASE

GROUPEMENT D INTERET ECONOMIQUE STX
4009286 - CONTINUOUS PRODUCTION OF FERMENTED LIQUIDS

GULF RESEARCH AND DEVELOPMENT COMPANY
3821084 - IMMOBILIZATION OF ENZYMES
3841970 - IMMOBILIZED ENZYMES
3844892 - METHOD OF IMMOBILIZING ENZYMES

HITACHI, LTD.
4307195 - IMMOBILIZED ENZYME MEMBRANE

HOFFMANN-LA ROCHE INC.
4181636 - PROCESS FOR PRODUCING IMMUNOLOGICAL DIAGNOSTIC REAGENTS
4226747 - IMMUNOLOGICAL DIAGNOSTIC REAGENTS COMPRISING THIO-AMINE TERMINATED LATEX PARTICLES

HONEYWELL INC.
3930957 - APPARATUS AND METHOD FOR BIOLOGICAL ANALYSIS

ILLINOIS WATER TREATMENT COMPANY
4289853 - HIGH LOADING OF IMMOBILIZED ENZYMES ON ACTIVATED CARBON SUPPORTS

ILLINOIS WATER TREATMENT COMPANY
4204041 - HIGH LOADING OF IMMOBILIZED ENZYMES ON ACTIVATED CARBON SUPPORTS

IMPERIAL CHEMICAL INDUSTRIES LIMITED
3700609 - GRAFT COPOLYMERS
4069104 - CONVERSION OF ALDOSE TO KETOSE IN THE PRESENCE OF OXYANIONS OR MIXED OXYANIONS OF TIN OR GERMANIUM
4151049 - COMPOSITIONS HAVING PROTEIN REACTIVE GROUPS, MEMBRANES, ELECTRODES COATED WITH SUCH COMPOSITIONS AND CHEMICAL ANALYSIS M ETHODS
4177253 - MAGNETIC PARTICLES FOR IMMUNOASSAY

INSTITUT NATIONAL DE LA RECHERCHE AGRONOMIQUE
4203893 - COUPLING PRODUCTS OF CYTIDINE-DIPHOSPHOCHOLINE AND AMINO-COMPOUNDS FOR PHARMACEUTICAL USE

JAPAN ATOMIC ENERGY RESEARCH INSTITUTE
4177107 - PROCESS FOR PRODUCING COMPOSITION CONTAINING INSOLUBILIZED ENZYME AND/OR INSOLUBILIZED BACTERIAL CELLS
4193845 - IMMOBILIZATION OF ENZYMES OR BACTERIAL CELLS
4194066 - IMMOBILIZATION OF ENZYMES OR BACTERIA CELLS
4226938 - METHOD FOR IMMOBILIZING ENZYMES
4272617 - IMMOBILIZATION OF ENZYMES OR BACTERIA CELLS

KABUSHIKI KAISHA HAYASHIBARA SEIBUTSU KAGAKU KENKYUJO
4102743 - PROCESS FOR THE REMOVAL OF SUCROSE FROM A SUGAR MIXTURE

KALI-CHEMIE AKTIENGESELLSCHAFT
4230803 - PREPARATION OF WATER-INSOLUBLE ENZYME COMPOSITIONS

KANSAI PAINT CO., LTD.
4195129 - METHOD FOR IMMOBILIZING ENZYMES AND MICROBIAL CELLS

KEEVER COMPANY
3498882 - METHOD OF MAKING A ZINC LIPASE COMPLEX

ORGANIZATIONAL PATENTING (1/69-12/81) - - ALPHA LISTING

KOCH-LIGHT LABORATORIES LIMITED
3666733 - WATER INSOLUBLE HYDROPHILIC POLYMERS OF ACRYLAMIDE POLYMER
3761357 - BONDING OF ENZYMES TO POLYMERIC MATERIALS
3846306 - BONDING OF ENZYMES, ENZYME DERIVATIVES AND OTHER BIOLOGICALLY ACTIVE MOLECULES TO POLYMERIC MATERIALS
3884761 - BONDING OF ENZYMES, ENZYME DERIVATIVES AND OTHER COMPOUNDS TO POLYMERIC MATERIALS
4043869 - WATER INSOLUBLE BIOLOGICALLY ACTIVE MATERIAL

KOMMANDITBOLAGET KOCKUMS CHEMICAL AB + CO.
4043871 - ENZYMATIC SUBSTRATE COMPOSITION ADSORBED ON A CARRIER

KONINKLIJKE NEDERLANDSCHE GISTEN-EN SPIRITUSFABRIEK N.V.
3801463 - PREPARATION OF ENZYMES IN PARTICULATE FORM

L AIR LIQUIDE, SOCIETE ANONYME POUR L ETUDE ET L EXPLOIT
3959079 - INSOLUBILIZATION OF PROTEINS BY CHEMICAL ACTIVATION OF A POLYMERIZED SUPPORT AND CROSSLINKING OF THE PROTEIN TO THE SUPPORT

LEUVEN RESEARCH + DEVELOPMENT VZW
4180437 - PURIFICATION OF ANTISERUM FOR THROMBOSIS TEST

LKB-PRODUKTER AB
4021307 - METHOD AND APPARATUS FOR MEASURING TEMPERATURE CHANGES GENERATED BY ENZYME ACTIVITY

MARINE COLLOIDS, INC.
3966897 - MEDIUM FOR USE IN BIOASSAY AND METHOD OF USING SAME

MASSACHUSETTS GENERAL HOSPITAL
4261976 - METHOD AND GLYCOPROTEIN COMPOSITION FOR INHIBITION OF GROWTH OF TRANSFORMED CELLS AND TUMORS

MASSACHUSETTS INSTITUTE OF TECHNOLOGY
3878049 - BIOCHEMICAL TEMPERATURE-SENSITIVE PROBE AND METHOD FOR MEASURING REACTANT CONCENTRATIONS THEREOF

MAX-PLANCK-GESELLSCHAFT ZUR FORDERUNG DER WISSENSCHAFTEN E.V
3791928 - PURIFICATION OF THYMIDINE KINASE
4177038 - METHOD FOR THE PRODUCTION OF A VEHICLE SUBSTANCE WHICH IS CAPABLE OF COVALENT BONDING WITH BIOLOGICALLY ACTIVE MATTER

MCDOUGALL, RANKS HOVIS, LIMITED
3702804 - HYDROLYTIC ENZYMES CHEMICALLY COUPLED TO CELLULOSE ETHERS

MEDICAL COLLEGE OF WISCONSIN, INC.
4235960 - COMPETITIVE ENZYME-LINKED IMMUNOASSAY

MERCK PATENT GESELLSCHAFT MIT BESCHRANKTER HAFTUNG
3959080 - CARRIER MATRIX FOR THE FIXATION OF BIOCHEMICALLY EFFECTIVE SUBSTANCES AND PROCESS FOR THE PREPARATION THEREOF

MIDWEST RESEARCH INSTITUTE
3959078 - ENZYME IMMOBILIZATION WITH A THERMOCHEMICAL-PHOTOCHEMICAL BIFUNCTIONAL AGENT

MILES LABORATORIES INC.
3553310 - IMMUNOLOGICALLY REACTIVE PARTICLES
3684451 - METHOD FOR DETERMINATION OF COUPLING COMPOUNDS
3779869 - ENZYME STABILIZATION
3873426 - INSOLUBLE ENZYMES
3974036 - PROCESS FOR CONDITIONING BACTERIAL CELLS CONTAINING GLUCOSE ISOMERASE ACTIVITY
4212943 - PRODUCTION OF BACTERIAL CELL AGGREGATE
4238565 - SPECIFIC BINDING ASSAY WITH A PROSTHETIC GROUP AS A LABEL COMPONENT

ORGANIZATIONAL PATENTING (1/69-12/81) - - ALPHA LISTING

MILES LABORATORIES INC. (CONTINUED)
4251632 - PREPARATION OF A BACTERIAL CELL AGGREGATE

MILLIPORE CORPORATION
4066512 - BIOLOGICALLY ACTIVE MEMBRANE MATERIAL
4200690 - IMMUNOASSAY WITH MEMBRANE IMMOBILIZED ANTIBODY

MINNESOTA MINING AND MANUFACTURING COMPANY
3905923 - POLY (UREA-URETHANE) FOAMS CONTAINING IMMOBILIZED ACTIVE ENZYMES
4210722 - PROTEIN IMMOBILIZER

MITSUBISHI CHEMICAL INDUSTRIES LTD.
4008124 - PROCESS FOR THE ISOMERIZATION OF GLUCOSE INTO FRUCTOSE
4078970 - INSOLUBILIZED GLUCOSE ISOMERASE
4113568 - PROCESS FOR THE RENEWAL OF AN INSOLUBILIZED GLUCOSE ISOMERASE
4205127 - PROCESS FOR THE RENEWAL OF AN INSOLUBILIZED GLUCOSE ISOMERASE
4260680 - METHOD AND APPARATUS FOR THE MEASUREMENT OF GLUCOSE CONTENT

MITSUBISHI GAS-CHEMICAL COMPANY, INC.
4092220 - PROCESS FOR MANUFACTURE OF L(+)-TARTARIC ACID OR SALTS THEREOF

MITSUBISHI RAYON CO., LTD.
4276381 - PREPARATION OF IMMOBILIZED ENZYMES OF MICROORGANISMS

MITSUI SUGAR CO., LTD.
4191810 - PROCESS FOR THE PRODUCTION OF IMMOBILIZED GLUCOSE ISOMERASE

MITSUI TOATSU CHEMICALS INC.
4202905 - LUMINOUS MATERIAL FOR USE IN FISHERY AND METHOD FOR THE PRODUCTION THEREOF

MONSANTO COMPANY
3502545 - PROCESS FOR THE SEPARATION OF WATER-SOLUBLE POLYMERIC MATERIALS FROM UNBOUND PROTEIN OR PEPTIDE USING SEMIPOROUS GEL
3597219 - CHILLPROOFING OF BEVERAGES USING INSOLUBLE POLYMER-ENZYME PRODUCT
3597220 - CHILLPROOFING OF BEVERAGES USING INSOLUBLE POLYMER-ENZYME PRODUCT
3616229 - POLYMER-ENZYME PRODUCTS COMPRISING PLURALITY OF ENZYMES COVALENTLY BOUND TO POLYMER
3625827 - WATER-SOLUBLE POLYMER-ENZYME PRODUCTS
3634258 - DETERGENT COMPOSITIONS CONTAINING SOLUBLE POLYMER-ENZYME PRODUCT
3649457 - ENZYMATIC PROCESSING WITH POLYMER-ENZYME PRODUCT
3669841 - ATTACHMENT OF ENZYMES TO SILICEOUS MATERIALS
3691016 - PROCESS FOR THE PREPARATION OF INSOLUBLE ENZYMES
3705084 - MACROPOROUS ENZYME REACTOR
3706633 - PREPARATION OF WATER-INSOLUBLE ENZYME DERIVATIVES
3715278 - ENZYME-POLYMER PRODUCT ATTACHED TO SURFACE OF SILICEOUS MATERIALS THEREOF
3741871 - PREPARATION OF IMMOBILIZED ENZYMES
4013514 - PREPARING A REACTOR CONTAINING ENZYMES ATTACHED TO DIALDEHYDE CELLULOSE

MOUNT SINAI RESEARCH FOUNDATION, INC.
3741875 - PROCESS AND APPARATUS FOR OBTAINING A DIFFERENTIAL WHITE BLOOD CELL COUNT

NATIONAL PATENT DEVELOPMENT CORPORATION
3767790 - MICROORGANISMS
3860490 - PROCESS OF SUBJECTING A MICROORGANISM SUSCEPTIBLE MATERIAL TO A MICROORGANISM

NATIONAL RESEARCH DEVELOPMENT CORPORATION
3557073 - PRODUCTION OF A POLYMER HAVING DIHALO-S-TRIAZINYL GROUPS BOUND THERETO
3619371 - PRODUCTION OF A POLYMERIC MATRIX HAVING A BIOLOGICALLY ACTIVE SUBSTANCE BOUND THERETO

ORGANIZATIONAL PATENTING (1/69-12/81) - - ALPHA LISTING

NATIONAL RESEARCH DEVELOPMENT CORPORATION (CONTINUED)
3674767 - NOVEL POLYMERIC MATERIALS CONTAINING TRIAZINYL GROUPS
3824150 - ENZYME BOUND TO POLYMERIC SHEET WITH A TRIAZINE BRIDGING GROUP
4115305 - SUPPORT MATRIX FOR CARRYING BIOLOGICALLY ACTIVE MATERIALS AND PROCESS FOR THE PREPARATION THEREOF

NELSON RESEARCH + DEVELOPMENT COMPANY
4007089 - METHOD FOR BINDING BIOLOGICALLY ACTIVE COMPOUNDS

NEW YORK UNIVERSITY
4229537 - PREPARATION OF TRICHLORO-S-TRIAZINE ACTIVATED SUPPORTS FOR COUPLING LIGANDS

NOVO INDUSTRI A/S
3980521 - IMMOBILIZATION OF GLUCOSE ISOMERASE
4025389 - PROCESS AND ISOMERIZING GLUCOSE
4116771 - IMMOBILIZED SACCHARIFYING ENZYME PRODUCT AND PROCESS FOR PREPARATION THEREOF
4266029 - ENZYME IMMOBILIZATION
4288552 - IMMOBILIZED INTRACELLULAR ENZYMES

NOVO LABORATORIES, INCORPORATED
4138290 - GLUCOSE ISOMERIZATION UNDER EXPANDED BED CONDITIONS

OHIO STATE UNIVERSITY RESEARCH FOUNDATION
3930950 - METHOD OF IMMOBILIZING AN ENZYME

ORGANON INC.
3654083 - PREPARATION OF STABLE, WATER-SOLUBLE ENZYME CONJUGATES

ORTHO DIAGNOSTICS, INC.
4140662 - ATTACHMENT OF PROTEINS TO INERT PARTICLES

OWENS-ILLINOIS INC.
3833555 - POLYSACCHARIDE CYCLIC CARBAMATE CONTAINING COMPOUNDS
3839175 - ELECTRODEPOSITION OF ENZYMES
3839309 - POLYACRYLAMIDE DERIVATIVES AND METHOD OF INSOLUBILIZING ENZYMES THEREWITH
3860486 - INSOLUBILIZING ENZYMES WITH POLYSTYRENE DERIVATIVES
3896008 - ELECTROCHEMICAL POTENTIOMETRIC METHOD FOR SELECTIVELY DETERMINING ALKALINE PHOSPHATASE CONTENT IN AQUEOUS FLUIDS
3926734 - UREA ANALYSIS
3933589 - CHEMICAL IMMOBILIZATION OF ENZYMES
4001085 - IMMOBILIZATION OF ENZYMES ON AN INORGANIC MATRIX
4008126 - IMMOBILIZATION OF PROTEINS BY IN-SITU POLYMERIZATION

PALO ALTO MEDICAL RESEARCH FOUNDATION
4000098 - SEPARATION OF PROTEINS BY HYDROPHOBIC ADSORPTION

PENICK + FORD LIMITED
3849253 - PROCESS OF IMMOBILIZING ENZYMES
4029546 - COLUMN APPARATUS AND PROCESS FOR IMMOBILIZED ENZYME REACTIONS
4033820 - STARCH SPONGE COLUMN APPARATUS AND PROCESS FOR IMMOBILIZED ENZYME REACTIONS
4304857 - WHOLE CELL ENZYME COMPOSITION CONTAINING FUMED SILICA

PENTAPHARM A.G.
4137127 - PROCESS FOR THE PREPARATION OF THROMBIN-LIKE ENZYMES FROM SNAKE VENOMS

PFIZER INC.
3733205 - ENZYMATIC REMOVAL OF DIACETYL FROM FERMENTED BEVERAGES
3905868 - ENZYMATIC DEACYLATION OF BENZYL- AND PHENOXYMETHYLPENICILLIN TETRAZOLES

ORGANIZATIONAL PATENTING (1/69-12/81) - - ALPHA LISTING

(CONTINUED)

PFIZER INC.
3925157 - IMMOBILIZED ENZYMES
3957580 - IMMOBILIZED MICROBIAL CELLS
4113566 - PROCESS FOR PREPARING 6-AMINOPENICILLANIC ACID

PHARMACIA AKTIEBOLAG
3645852 - METHOD OF BINDING WATER SOLUBLE PROTEINS AND WATER SOLUBLE PEPTIDES TO WATER-INSOLUBLE POLYMERS USING CYANOGEN HALIDE
3788948 - METHOD OF BINDING, BY COVALENT BONDS, PROTEINS AND POLYPEPTIDES POLYMERS USING CYANATES

PHARMACIA FINE CHEMICALS AB
3914183 - COMPOSITION IN BEAD FORM CONTAINING A WATER-INSOLUBLE POLYSACCHARIDE ACTIVATED BY CYANOGEN HALIDE, AND A PROCESS FOR THE PREPARATION OF SAME
4175073 - REACTIVE DERIVATIVES OF HS-GROUP-CONTAINING POLYMERS

PHOTO FILM CO., LTD.
3691090 - ENCAPSULATION METHOD

POLYMERIC ENZYMES, INC.
3859169 - ENZYMES ENTRAPPED IN GELS

PRESIDENT AND FELLOWS OF HARVARD COLLEGE
4278761 - ENZYME ASSAY AND KIT THEREFOR

PROCTER + GAMBLE COMPANY
3519570 - ENZYME-CONTAINING DETERGENT COMPOSITIONS AND A PROCESS FOR CONGLUTINATION OF ENZYMES AND DETERGENT COMPOSITIONS
3629123 - STABILIZED AMYLASE COMPOSITIONS
3647630 - ENZYMATICALLY ACTIVE COMPOSITION HAVING AN INSOLUBILIZED PROTEASE ENZYME COVALENTLY BONDED TO A WATER INSOLUBLE POLYANHYDROGLUCOSE
4115292 - ENZYME-CONTAINING DETERGENT ARTICLES
4176079 - WATER-SOLUBLE ENZYME-CONTAINING ARTICLE

PRODUITS CHIMIQUES UGINE KUHLMANN
4209390 - PROCESS FOR BIOLOGICAL DENITRIFICATION OF EFFLUENTS

PROJEKTIERUNG CHEMISCHE VERFAHRENSTECHNIK GMBH
4200692 - PROCESS FOR THE PRODUCTION OF XYLOSE BY ENZYMATIC HYDROLYSIS OF XYLAN
4275159 - PROCESS FOR THE PRODUCTION OF XYLOSE BY ENZYMATIC HYDROLYSIS OF XYLAN

PROPORTIONAL ASSIGNMENTS
3536587 - ENZYME RESIN AND A PROCESS FOR THE PREPARATION THEREOF

PURDUE RESEARCH FOUNDATION
4004980 - ENZYME ENTRAPPMENT WITH CELLULOSE ACETATE FORMULATIONS
4006059 - HYDROPHOBIC NONCOVALENT BINDING OF PROTEINS TO SUPPORT MATERIALS
4063017 - POROUS CELLULOSE BEADS AND THE IMMOBILIZATION OF ENZYMES THEREWITH
4090022 - POROUS CELLULOSE BEADS

RANKS HORIS MCDOUGALL LIMITED
3627638 - AMYLASE CHEMICALLY COUPLED TO CELLULOSE ETHERS
3705890 - CELLULOSE CARBONATES AND METHOD FOR THEIR PREPARATION
3713982 - ENZYME CHEMICALLY COUPLED TO CELLULOSE ETHER
3810821 - ENZYMES ATTACHED TO CELLULOSE CARBONATE
3841969 - PREPARATION OF IMMOBILIZED ENZYMES

REDPATH SUGARS LIMITED
4176006 - ENZYME IMMOBILIZATION WITH A DISULPHIDE BRIDGE

ORGANIZATIONAL PATENTING (1/69-12/81) - - ALPHA LISTING

RESEARCH CORPORATION
3758396 - PREPARATION OF IMMOBILIZED ENZYME-MEMBRANE COMPLEXES BY ELECTRO-CODEPOSITION
3809613 - BIOCATALYTIC MODULE
3843446 - PREPARATION OF ENZYMATICALLY ACTIVE MEMBRANES
3972776 - PREPARATION OF PROTEIN MEMBRANES CONTAINING MICROBIAL CELLS
3977941 - PROTEIN-ENZYME COMPLEX MEMBRANES

RESEARCH PRODUCTS REHOVOT LTD.
4101380 - PROCESS FOR THE CROSS-LINKING OF PROTEINS
4251631 - CROSS-LINKED ENZYME MEMBRANE

RESEARCH TRIANGLE INSTITUTE
4053644 - PROCESS OF REMOVING THE COOKED FLAVOR FROM MILK
4087328 - PURIFICATION AND IMMOBILIZATION OF SULFHYDRYL OXIDASE

RHONE POULENC INDUSTRIES
4034139 - GRAFTED MINERAL CARRIERS FOR FIXING ENZYMES
4119494 - IMMOBILIZATION OF ENZYMES IN AN ANHYDROUS MEDIUM
4132596 - SUPPORT-AMINOACYLASE COMPLEXES
4258133 - ENZYME-SUPPORT COMPLEXES
4264732 - ENZYMATIC COMPOSITIONS FOR ISOMERIZING GLUCOSE INTO LEVULOSE

RHONE-PROGIL
3806412 - PROCESS OF ENZYMATICALLY DEPILATING ANIMAL HIDES

R. J. REYNOLDS TOBACCO COMPANY
3935068 - CONTINUOUS ISOMERIZATION PROCESS UTILIZING IMMOBILIZED FLOCCULATE ENZYME
3935069 - ENZYMATIC PROCESS USING IMMOBILIZED MICROBIAL CELLS
3989596 - AGGREGATE OF DRIED FLOCCULATED CELLS
3989597 - AGGREGATE OF FLOCCULATED CELLS
4060456 - GLUCOSE ISOMERIZATION PROCESS
4061539 - PREPARATION AND USE OF GLUCOSE ISOMERASE

ROHM AND HAAS COMPANY
4266026 - CATALYTIC PROCESS UTILIZING HOLLOW FIBER MEMBRANES

ROHM G.M.B.H. CHEMISCHE FABRIK
4247643 - PREPARATION OF STABILIZED CARRIER-BOUND PROTEINS

ROHM GMBH
3764477 - RESIN-BOUND, PROTEIN-LIKE ACTIVE AGENTS PREPARED BY REACTING A PROTEIN WITH A WATER INSOLUBLE POLYMER OF ACRYLIC OR METH ACRYLIC ACID ANHYDRIDE
4039413 - METHOD OF BONDING A POLYPEPTIDE TO A MACROMOLECULAR POLYMERIC CARRIER BY IRRADIATION WITH LIGHT
4070348 - WATER-SWELLABLE, BEAD COPOLYMER
4190713 - PEARL POLYMER CONTAINING HOLLOW PEARLS

ROQUETTE FRERES
4163691 - INSOLUBLE ENZYMATICALLY ACTIVE PARTICLES

SAGAMI CHEMICAL RESEARCH CENTER
4284721 - METHOD FOR MANUFACTURING DIPEPTIDES

SANRAKU-OCEAN CO., LTD.
4148689 - IMMOBILIZATION OF MICROORGANISMS IN A HYDROPHILIC COMPLEX GEL

ORGANIZATIONAL PATENTING (1/69-12/81) - - ALPHA LISTING

SCHERING AKTIENGESELLSCHAFT
3987159 - STABLE SENSITIZED ERYTHROCYTES AND PREPARATION MEANS

SHOWA SANGYO KABUSHIKI KAISHA
4106987 - METHOD OF ISOMERIZING GLUCOSE TO FRUCTOSE

SNAM PROGETTI S.P.A.
3947325 - PREPARATION OF HIGH PERMEABILITY CELLULOSE FIBERS CONTAINING ENZYMES
4100029 - METHOD FOR IMPROVING THE ACTIVITY OF OXIREDUCTASE ENZYMES EMBEDDED IN FILAMENTARY STRUCTURES

SNOW BRAND MILK PRODUCTS, CO., LTD.
4184919 - METHOD OF GELLING MICROBIAL MYCELIA

SOCIETE D ASSISTANCE TECHNIQUE POUR PRODUITS NESTLE S.A.
3821083 - PREPARATION OF IMMOBILIZED ENZYMES
4017364 - PROCESS FOR PRODUCING AN ENZYME PRODUCT HAVING VARIABLE SOLUBILITY
4094743 - ENZYMES IMMOBILIZED ON CHITOSAN

SOCIETE GENERALE DE RECHERCHES ET D APPLICATIONS SCIENTIFI
3836433 - FIXATION OF NITROGENOUS MATERIALS

SOCIETE NATIONALE DES PETROLES D AQUITAINE
3960666 - PREPARATION OF AN ENZYME-CELLULOSE COMPLEX

STAMICARBON B.V.
3919048 - INSOLUBLE CARRIER-BOUND ENZYMES

STAMICARBON N.V.
3775378 - CHEMICAL BINDING OF AN AMINO ACID TO A CHLOROSULFONATED POLYMER CARRIER

STANDARD BRANDS INCORPORATED
3623953 - METHOD FOR ISOMERIZING GLUCOSE SYRUPS
3654080 - PROCESS FOR ISOMERIZING GLUCOSE TO FRUCTOSE
3694314 - PROCESS FOR ISOMERIZING GLUCOSE TO FRUCTOSE
3788945 - PROCESS FOR ISOMERIZING GLUCOSE TO FRUCTOSE
3817832 - PROCESS FOR ISOMERIZING GLUCOSE TO FRUCTOSE
3821082 - TREATING CELLS OF MICROORGANISMS CONTAINING INTRACELLULAR GLUCOSE ISOMERASE
3909354 - PROCESS FOR ISOMERIZING GLUCOSE TO FRUCTOSE
3933588 - ENZYME TREATMENT
4011137 - PROCESS FOR PRODUCING DEXTROSE USING MIXED IMMOBILIZED ENZYMES
4102745 - PROCESS FOR PRODUCING DEXTROSE USING MIXED IMMOBILIZED ENZYMES
4110164 - AGGLOMERATED FIBROUS CELLULOSE
4111750 - PROCESS FOR CONVERTING LIQUEFIED STARCH TO A MIXTURE OF GLUCOSE AND FRUCTOSE UTILIZING A MULTI-COMPONENT IMMOBILIZED ENZ
YME SYSTEM

STANDARD OIL COMPANY
3819610 - PROCESS FOR PREPARING POLYCELLULAR PORTEIN PRODUCTS

SUMITOMO CHEMICAL COMPANY, LIMITED
4146432 - IMMOBILIZED PROTEASES
4170696 - ENZYME-IMMOBILIZATION CARRIER AND PREPARATION THEREOF
4239854 - ENZYME-IMMOBILIZATION CARRIERS AND PREPARATION THEREOF
4247642 - ENZYME IMMOBILIZATION WITH PULLULAN GEL

SUMMA CORPORATION
4059685 - IMMOBILIZED IMMUNOADSORBENT

ORGANIZATIONAL PATENTING (1/69-12/81) - - ALPHA LISTING

SYNBAR ASSOCIATES, MESNE
3481952 - N-(1-OXIDE-2,2,5,5, TETRA LOWER ALKYL PYRROLCDINYL-3_-MALEIMIDES

SYVA COMPANY
3453288 - ELECTRON SPIN RESONANCE LABELS FOR BIOMOLECULES
3843447 - PHOTOLYTICALLY ACTIVATED COUPLING TO POLYPEPTIDES
4220722 - METHOD FOR CONJUGATING TO POLYAMINO COMPOUNDS EMPLOYING HALOACYL GROUPS AND COMPOSITIONS PREPARED THEREBY
4275149 - MACROMOLECULAR ENVIRONMENT CONTROL IN SPECIFIC RECEPTOR ASSAYS
4281065 - PHENCYCLIDINE CONJUGATES TO ANTIGENIC PROTEINS AND ENZYMES

TAKEDA CHEMICAL INDUSTRIES LTD.
3945888 - METHOD FOR THE PRODUCTION OF CEPHALOSPORINS
4011135 - PRODUCTION OF L(+)-TARTARIC ACID
4075405 - BETA-1,3-GLUCAN DERIVATIVES

TANABE SEIYAKU CO. LTD.
3791926 - PROCESS FOR THE PRODUCTION OF L-ASPARTIC ACID
3816254 - OPTICAL RESOLUTION OF RACEMIC AMINO ACIDS
3886040 - NOVEL PROCESS FOR PREPARING L-CITRULLINE
3898127 - PROCESS FOR PREPARING UROCANIC ACID
3898128 - PROCESS FOR PREPARING L-ALANINE
3922195 - PROCESS FOR PREPARING L-MALIC ACID
3935072 - PURIFICATION OF COENZYME A
3953291 - PROCESS FOR PREPARING 6-AMINOPENICILLANIC ACID
4081327 - PREPARATION OF D-FRUCTOSE
4090919 - WATER-INSOLUBLE TANNIN PREPARATION FOR IMMOBILIZATION OF PROTEINS
4138292 - IMMOBILIZED CATALYTICALLY ACTIVE SUBSTANCE AND METHOD OF PREPARING THE SAME
4224411 - IMMOBILIZED AMINOACYLASE

TECHNICON INSTRUMENTS CORPORATION
4204040 - COPOLYMERIZATION OF PROTEINS ON AN INORGANIC SUPPORT
4206286 - IMMOBILIZATION OF PROTEINS ON INORGANIC SUPPORTS
4217415 - IMMOBILIZATION OF AN ENZYME SUBSTRATE
4253844 - INSOLUBILIZED PROTEINS AND IMMUNOASSAYS UTILIZING THEM

TEMPLE UNIVERSITY
4078971 - BOUND, ACTIVE CELLULAR ORGANELLES AND METHOD OF PRODUCING SAME

TLC CORPORATION
3814584 - ANALYTICAL METHOD EMPLOYING ACTIVE MATERIAL CONTAINED

TORAY INDUSTRIES INC.
4275156 - GLUCOSE ISOMERASE IMMOBILIZED PRODUCT AND PROCESS FOR PREPARING SAME

TOYO BOSEKI KABUSHIKI KAISHA
4240889 - ENZYME ELECTRODE PROVIDED WITH IMMOBILIZED ENZYME MEMBRANE

TOYO JOZO COMPANY, LTD.
3909360 - PROCESS FOR PRODUCING INSOLUBILIZED ENZYME
3960662 - PROCESS FOR THE PRODUCTION OF 7-AMINO-CEPHEM COMPOUNDS
4287345 - POLYFUNCTIONAL DISULFIDE COMPOUNDS HAVING S+13 S EXCHANGE REACTIVITY

TOYO SODA MANUFACTURING CO., LTD.
4066827 - PROCESS FOR PRODUCING A POLYION COMPLEX HAVING A NUCLEIC ACID BASE

ORGANIZATIONAL PATENTING (1/69-12/81) - - ALPHA LISTING

UNITED KINGDOM ATOMIC ENERGY AUTHORITY
3943072 - SEPARATION OF MOLECULES

UNITED STATES OF AMERICA, AGRICULTURE
3672955 - PREPARATION OF AN INSOLUBLE ACTIVE ENZYME
3736231 - PREPARATION OF INSOLUBILIZED ENZYMES
3745088 - ACTIVE WATER-INSOLUBLE ENZYMERS
3767531 - PREPARATION OF INSOLUBILIZED ENZYMES
3909358 - INSOLUBILIZED ENZYMES
3985616 - IMMOBILIZATION OF ENZYMES WITH A STARCH-GRAFT COPOLYMER
4121974 - PREPARATION OF RETROGRADATION-RESISTANT STARCHES WITH IMMOBILIZED AMYLASES
4134863 - HIGHLY ABSORBENT GRAFT COPOLYMERS OF POLYHYDROXY POLYMERS, ACRYLONITRILE, AND ACRYLIC COMONOMERS
4167447 - METHOD FOR INSOLUBILIZING ENZYMES ON CHITOSAN
4194998 - HIGHLY ABSORBENT POLYHYDROXY POLYMER GRAFT COPOLYMERS WITHOUT SAPONIFICATION

UNITED STATES OF AMERICA, DEPARTMENT OF ENERGY
4032407 - TAPERED BED BIOREACTOR
4127447 - BIOMASS GROWTH RESTRICTION IN A PACKED BED REACTOR
4287305 - MICROORGANISM IMMOBILIZATION

UNITED STATES OF AMERICA HEALTH EDUCATION AND WELFARE, MESNE
3796634 - INSOLUBILIZED BIOLOGICALLY ACTIVE ENZYMES

UNITED STATES OF AMERICA, INTERIOR
4113567 - INSOLUBILIZATION OF ENZYMES ON MODIFIED PHENOLIC POLYMERS

UNITED STATES OF AMERICA, NAVY
4069106 - IMMOBILIZATION OF ENZYMES ON KERATIN
4089746 - METHOD FOR INSOLUBILIZING ENZYMES ON CHITOSAN

UNITIKA LTD.
4273873 - PREPARATION OF ANTITHROMBOGENIC POLYMERIC MATERIALS

UNIVERSAL RESEARCH AND DEVELOPMENT CORP.
4252901 - SYSTEM AND PROCESS FOR ANAEROBIC DIGESTION

UNIVERSITY OF UTAH
3966580 - NOVEL PROTEIN-IMMOBILIZING HYDROPHOBIC POLYMERIC MEMBRANE, PROCESS FOR PRODUCING SAME AND APPARATUS EMPLOYING SAME
4046633 - DIRECT RENIN ASSAY SYSTEM AND METHOD

UNIVERSITY OF VIRGINIA
3849254 - PROCESS FOR EFFECTING ENZYMATIC REACTIONS IN AEROSOLS

UOP INC.
4141857 - SUPPORT MATRICES FOR IMMOBILIZED ENZYMES
4193910 - PREPARATION OF SUPPORT MATRICES FOR IMMOBILIZED ENZYMES
4206259 - SUPPORT MATRICES FOR IMMOBILIZED ENZYMES
4218363 - PREPARATION OF SUPPORT MATRICES FOR IMMOBILIZED ENZYMES
4229536 - PROCESS FOR PREPARING IMMOBILIZED ENZYMES
4248969 - REGENERATION OF A IMMOBILIZED ENZYME SYSTEM
4250260 - REGENERATION OF AN IMMOBILIZED ENZYME SYSTEM
4250263 - METHOD OF PURIFICATION OF THERMALLY STABLE ENZYMES
4268419 - SUPPORT MATRICES FOR IMMOBILIZED ENZYMES
4268423 - SUPPORT MATRICES FOR IMMOBILIZED ENZYMES
4292199 - METHOD OF PREPARING A SUPPORT MATRIX

ORGANIZATIONAL PATENTING (1/69-12/81) - - ALPHA LISTING

VADETEC S.A.
4234681 - IMMOBOLIZED LIGHT EMITTING SYSTEMS

VISCOSE DEVELOPMENT COMPANY LIMITED
3905954 - ACTIVATED CELLULOSE

WISCONSIN ALUMNI RESEARCH FOUNDATION
4144131 - IMMOBILIZATION OF ENZYMES ON HUMAN TISSUE OR ERYTHROCYTES

W. R. GRACE + CO.
3928138 - PREPARATION AND USE OF ENZYMES BOUND TO POLYURETHANE
3929574 - USE OF ENZYMES BOUND TO POLYURETHANE
4094744 - WATER-DISPERSIBLE PROTEIN/POLYURETHANE REACTION PRODUCT
4098645 - IMMOBILIZATION OF PROTEINS WITH POLYURETHANE POLYMERS
4195127 - PROCESS FOR IMMOBILIZING PROTEINS
4226935 - ENZYMATIC DIAGNOSTIC COMPOSITION
4237229 - IMMOBILIZATION OF BIOLOGICAL MATERIAL WITH POLYURETHANE POLYMERS
4250267 - IMMOBILIZED BIOLOGICAL MATERIAL

YEDA RESEARCH AND DEVELOPMENT CO., LTD.
3627640 - ENZYME PURIFICATION AND DECOLORIZATION
3650900 - INSOLUBLE POLYMER-ENZYME PRODUCTS
3650901 - POLYMERIC ENZYME PRODUCTS
4013511 - IMMOBILIZED ENZYMES

YELLOW SPRINGS INSTRUMENT COMPANY, INC.
3979274 - MEMBRANE FOR ENZYME ELECTRODES
4073713 - MEMBRANE FOR ENZYME ELECTRODES

INVENTORS OF INDIVIDUALLY OWNED PATENTS (1/75-12/81) (ALPHA LISTING)

INVENTOR NAME			STREET	CITY	ST	ZIP/CNTRY
ALI	MAJID		19 EDGEMONT PL.	TEANECK	NJ	07666
4256833 - ENZYME IMMUNOASSAY FOR ALLERGIC DISORDERS						
ALLEN	BILLY	R.	2034 DUBLIN-GRANVILLE RD.	COLUMBUS	OH	43229
4115198 - METHOD OF IMMOBILIZATION OF BIOLOGICALLY ACTIVE ORGANIC SUBSTANCES INCLUDING ENZYMES						
BARRETT	M.	JAMES	1500 SPRING GARDEN ST.	PHILADELPHIA	PA	19101
4001583 - COVALENTLY BOUND BIOLOGICAL SUBSTANCES TO PLASTIC MATERIALS AND USE IN RADIOASSAY						
BRENNER	MAX		SPIEGELBERGSTRASSE 33	CH-4059 BASEL		CH
3956113 - PROCESS FOR THE MANUFACTURE OF AMINO COMPOUNDS FIXED TO CARRIERS						
CHARLES	MARVIN		622 N. 29 ST.	ALLENTOWN	PA	18104
4048018 - METHOD OF CARRYING OUT ENZYME CATALYZED REACTIONS						
4115198 - METHOD OF IMMOBILIZATION OF BIOLOGICALLY ACTIVE ORGANIC SUBSTANCES INCLUDING ENZYMES						
COUGHLIN	ROBERT	W.	49 STORRS	HEIGHTS RD.	CT	06268
4115198 - METHOD OF IMMOBILIZATION OF BIOLOGICALLY ACTIVE ORGANIC SUBSTANCES INCLUDING ENZYMES						
COUGHLIN	ROBERT	W.	902 SEVENTH AVE.	BETHLEHEM	PA	18018
3928143 - METHOD OF CARRYING OUT ENZYME-CATALYZED REACTIONS						
4048018 - METHOD OF CARRYING OUT ENZYME CATALYZED REACTIONS						
CRAVEN	DAVID	BARRY	18 EVERSLEY PARK, STORETON RD.	OXTON, BIRKENHEAD, C		EN
3904478 - IMMOBILIZED CO-ENZYMES						
CUATRECASAS	PEDRO		10 HILLSIDE ROAD	BALTIMORE	MD	21210
3947352 - POLYSACCHARIDE MATRICES FOR USE AS ADSORBENTS IN AFFINITY CHROMATOGRAPHY TECHNIQUES						
DAVIS	FRANK	F.	19 FARMINGDALE RD.	EAST BRUNSWICK	NJ	08816
4179337 - NON-IMMUNOGENIC POLYPEPTIDES						
DEAN	PETER	DUNCAN	43 REDGATE	FORMBY, LANCASHIRE		EN
3904478 - IMMOBILIZED CO-ENZYMES						
EKMAN	BO	MAGNUS	GRANITVAGEN 6 B	S-752 43 UPPSALA		SW
4061466 - BIOLOGICALLY ACTIVE COMPOSITION AND THE USE THEREOF						
EPTON	ROGER		22 WINCHESTER RISE	DUDLEY, WORCESTERSHI		EN
3896092 - MATERIAL FOR GEL PERMEATION CHROMATOGRAPHY						
FAYEMI	ALFRED		15 FRANCINE CT.	WHITE PLAINS	NY	10607
4256833 - ENZYME IMMUNOASSAY FOR ALLERGIC DISORDERS						
FOLKMAN	MOSES	J.	18 CHATHMAN CIR.	BROOKLINE	MA	02146
4164560 - SYSTEMS FOR THE CONTROLLED RELEASE OF MACROMOLECULES						
FREEMAN	AMIHAY		21 KIRIATH SEFER ST.	RISHON LEZION		IL
3970597 - NOVEL SUBSTITUTED POLYAMIDES AND PROCESS FOR PRODUCING THEM						
GARNETT	JOHN	LYNDON	29 ARABELLA ST.	LONGUEVILLE, NEW SOU		AU
3981775 - ENZYME INSOLUBILIZATION						

INVENTORS OF INDIVIDUALLY OWNED PATENTS (1/75-12/81) (ALPHA LISTING)

INVENTOR NAME			STREET	CITY	ST	ZIP/CNTRY
GIACIN	JACK	R.	2 STANWORTH LA.	ALLENTOWN	NJ	08501
4092219 - PREPARATION OF ENZYME-MEMBRANE COMPLEXES						
GILBERT	SEYMOUR	G.	74 N. ROSS HALL BLVD.	PISCATAWAY	NJ	08854
4092219 - PREPARATION OF ENZYME-MEMBRANE COMPLEXES						
GOLDSTEIN	LEON		21 JAVITS ST.	REHOVOTH		IL
3970597 - NOVEL SUBSTITUTED POLYAMIDES AND PROCESS FOR PRODUCING THEM						
GREGOR	HARRY	P.	150 LAKEVIEW AVE.	LEONIA	NJ	07605
4033817 - PRESSURE-DRIVEN ENZYME-COUPLED MEMBRANES						
4033822 - ENZYME-COUPLED ULTRAFILTRATION MEMBRANES						
4163714 - SEPARATING SUBSTANCES WITH PRESSURE-DRIVEN AFFINITY SORPTION MEMBRANES						
HASSELBLAD	FRITZ	VICTOR	ST. ERIKS TORG 3	GOTEBORG		SW
4061141 - APPARATUS AND METHOD FOR SELECTIVELY SEPARATING AMINO ACIDS AND DEFINED PROTEINS IN BLOOD						
HOLLOWAY	CHRISTOPHER		12 LEICESTER CLOSE	SMETHWICK, WORLEY, W		EN
3896092 - MATERIAL FOR GEL PERMEATION CHROMATOGRAPHY						
HYDEN	VIKTOR	HOLGER	PRASTGARDSGATEN 2	GOTEBORG		SW
4061141 - APPARATUS AND METHOD FOR SELECTIVELY SEPARATING AMINO ACIDS AND DEFINED PROTEINS IN BLOOD						
ISE	NORIO			NAKANOSAKA, KITA, KY		JA
3983097 - METHOD OF PRODUCING HIGH MOLECULAR DERIVATIVES						
KENYON	ROBERT	SYDNEY	29 GLEN ST.	EASTWOOD, NEW SOUTH		AU
3981775 - ENZYME INSOLUBILIZATION						
LEEDER	JOSEPH	G.	379 HUFF RD.	NORTH BRUNSWICK	NJ	08902
4092219 - PREPARATION OF ENZYME-MEMBRANE COMPLEXES						
LIDDY	MICHAEL	JAMES	20 CARINYAN CRESCENT	CASTLE HILL, NEW SOU		AU
3981775 - ENZYME INSOLUBILIZATION						
LIN	PO-MIN		714 BEVIER RD.	PISCATAWAY	NJ	08854
4092219 - PREPARATION OF ENZYME-MEMBRANE COMPLEXES						
LINDMARK	NILS	ROGER	GLIMMERVAGEN 9 B	S-752 41 UPPSALA		SW
4061466 - BIOLOGICALLY ACTIVE COMPOSITION AND THE USE THEREOF						
MCLAREN	JOHN	VINCENT	35 YORK AVE.	FINCHFIELD, WOLVERHA		EN
3896092 - MATERIAL FOR GEL PERMEATION CHROMATOGRAPHY						
MESA-TEJADA	RICARDO		42 JUNIPER PL.	BRIARCLIFF MANOR	NY	10510
4256833 - ENZYME IMMUNOASSAY FOR ALLERGIC DISORDERS						
NALEBUFT	DONALD		89 LAKE SHORE DR.	OAKLAND	NJ	07436
4256833 - ENZYME IMMUNOASSAY FOR ALLERGIC DISORDERS						
OKUBO	TSUNEO			NISHIDE, FUSHIMI, KY		JA
3983097 - METHOD OF PRODUCING HIGH MOLECULAR DERIVATIVES						

INVENTORS OF INDIVIDUALLY OWNED PATENTS (1/75-12/81) (ALPHA LISTING)

INVENTOR NAME	STREET	CITY	ST	ZIP/CNTRY
PARIKH INDU	4404 KESWICK ROAD	BALTIMORE	MD	21210
3947352 - POLYSACCHARIDE MATRICES FOR USE AS ADSORBENTS IN AFFINITY CHROMATOGRAPHY TECHNIQUES				
RAMANARAYANAN MADHAVA P.	100 HAVEN AVE.	NEW YORK	NY	10032
4256833 - ENZYME IMMUNOASSAY FOR ALLERGIC DISORDERS				
SAWYER PHILIP N.	7600 RIDGE BLVD.	BROOKLYN	NY	11209
4238480 - METHOD FOR PREPARING AN IMPROVED HEMOSTATIC AGENT AND METHOD OF EMPLOYING THE SAME				
SENJU RYOICHI	41-18	HIGASHIWAKAHISA, MIN		JA
4073689 - METHOD FOR IMMOBILIZING ENZYME				
SJOHOLM INGVAR GOSTA	TALLMOVAGEN 14	S-752 45, UPPSALA		SW
4061466 - BIOLOGICALLY ACTIVE COMPOSITION AND THE USE THEREOF				
SOKOLOVSKY MORDECHAI	10 RAV ASHI ST.	TEL AVIV		IL
3970597 - NOVEL SUBSTITUTED POLYAMIDES AND PROCESS FOR PRODUCING THEM				
TANAKA HIROO		FUKUOKA		JA
4073689 - METHOD FOR IMMOBILIZING ENZYME				
TURCOTTE HECTOR	1572 DU RUISSEAU AVE.	SILLERY, QUEBEC		CA
4288540 - REAGENT FOR THE EARLY DETECTION OF CANCER				

PATENTS (1/63-12/81) WITH NEITHER ASSIGNMENT NOR INVENTOR INFORMATION IN THE DATA BASE

3539455 - MEMBRANE POLAROGRAPHIC ELECTRODE SYSTEM AND METHOD WITH ELECTROCHEMICAL COMPENSATION
3639558 - IMMUNOLOGICAL REAGENT PARTICLES HAVING PROTEINACEOUS MATERIALS COVALENTLY BONDED THERETO
3715277 - PREPARATION OF FIBERS CONTAINING FIBERS
3736230 - PROCESS FOR PRODUCING 6-AMINOPENCILLANIC ACID
3809615 - METHOD AND MEANS FOR NATURAL GAS DETECTION
3827565 - METHOD AND DEVICE OF ARTIFICIAL ENDOCRINE PANCREAS
3843443 - POLYPEPTIDE MATERIALS BOUND TO FLUOROCARBON POLYMERS
3850798 - METHOD FOR SEPARATING A POLYPEPTIDE FROM MICROORGANISMS
3410754 3413198 3414479 3415804 3416997 3418211 3419471 3419472 3095307 3126324 3139390 3167485

IMMOBILIZED ENZYMES

FRONT PAGES OF SELECTED PATENTS

Jan-Apr 1982 U.S. Patents (15)	Selected U.S. Patents (76)		
4,323,650	4,269,941	4,254,218	4,242,219
4,326,031	4,218,363	4,182,655	4,234,681
4,324,858	4,263,400	4,247,643	4,191,810
4,327,181	4,273,873	4,247,642	4,275,159
4,320,194	4,210,723	4,208,482	4,204,041
4,321,324	4,146,432	4,205,127	4,066,512
4,321,323	4,246,351	4,195,128	4,039,382
4,321,327	4,229,536	4,177,038	4,102,745
4,318,988	4,210,722	4,224,411	4,184,919
4,318,990	4,121,974	4,090,919	4,279,998
4,321,141	4,251,632	4,245,064	4,271,269
4,310,554	4,179,337	4,246,349	4,048,018
4,317,879	4,205,128	4,251,631	4,268,423
4,317,810	4,266,026	4,246,350	4,195,127
4,312,946	4,264,732	4,206,286	4,200,690
	4,193,845	4,217,415	4,200,692
	4,276,381	4,176,006	4,226,937
	4,188,263	4,209,390	4,193,982
	4,252,899	4,138,290	4,144,131
	4,138,292	4,167,446	3,980,521
	4,258,133	4,281,065	3,989,597
	4,250,260	4,152,210	4,272,617
	4,260,680	4,229,537	4,226,938
	4,273,865	4,282,315	3,950,222
	4,259,445	4,253,844	4,248,969
	4,110,164		

PATENTS ARE LISTED IN ORDER OF APPEARANCE

United States Patent [19]

Rosevear

[11] **4,323,650**

[45] **Apr. 6, 1982**

[54] **IMMOBILIZATION OF BIOLOGICALLY ACTIVE SUBSTANCES IN A POROUS SUPPORT**

[75] Inventor: **Alan Rosevear**, Faringdon, England

[73] Assignee: **United Kingdom Atomic Energy Authority**, London, England

[21] Appl. No.: **15,405**

[22] Filed: **Feb. 26, 1979**

Related U.S. Application Data

[63] Continuation of Ser. No. 773,157, May 1, 1977, abandoned, which is a continuation of Ser. No. 587,201, Jun. 16, 1975, abandoned.

[30] **Foreign Application Priority Data**

Jun. 25, 1974 [GB] United Kingdom 28212/74

[51] **Int. Cl.**[3] **C12N 11/00**; C12N 11/04; C12N 11/14

[52] **U.S. Cl.** **435/174**; 435/176; 435/178; 435/182

[58] **Field of Search** 435/174, 176, 177, 178, 435/174, 180, 181, 182

[56] **References Cited**

U.S. PATENT DOCUMENTS

3,705,084 12/1972 Reynolds 435/180
3,736,231 5/1973 Stanley et al. 435/177
3,804,719 4/1974 Messing 435/176
3,849,253 11/1974 Harvey et al. 435/182
3,850,751 11/1974 Messing 435/176

OTHER PUBLICATIONS

Olson et al., The Use of Tannic Acid and Phenol-Formaldehyde with Glutaraldehyde to Immobilize Enzymes, Proceedings of 166th National Meeting of the American Chemical Society, 1973, Immobilized Enzymes in Food and Microbiological Processes, Plenium Press, N.Y., 8/74, (pp. 54-61).

Primary Examiner—David M. Naff
Attorney, Agent, or Firm—Larson and Taylor

[57] **ABSTRACT**

Biologically active substances such as enzymes are immobilized in the pores of a porous support material by introducing a solution of the biologically active substance into the pores of the support material, treating the active substance in the pores to temporarily retain the active substance in the pores and immobilizing the active substance in the pores by crosslinking. Temporary retention of the active substance in the pores may be carried out by precipitation with a precipitating agent or by freeze-drying.

2 Claims, No Drawings

United States Patent [19]

Goodson et al.

[11] **4,324,858**

[45] **Apr. 13, 1982**

[54] **STABILIZATION OF CHOLINESTERASE, DETECTOR KIT USING STABILIZED CHOLINESTERASE, AND METHODS OF MAKING AND USING THE SAME**

[75] Inventors: **Louis H. Goodson**, Kansas City, Mo.; **Alan Goodman**, Edgewood, Md.

[73] Assignee: **Midwest Research Institute**, Kansas City, Mo.

[21] Appl. No.: **160,027**

[22] Filed: **Jun. 16, 1980**

[51] **Int. Cl.**[3] **C12Q 1/46**

[52] **U.S. Cl.** **435/20**; 435/179; 435/805; 435/810

[58] **Field of Search** ..... 23/230 B; 422/56, 57; 435/4, 20, 176, 177, 179, 180, 184, 188, 196, 197, 805, 810

[56] **References Cited**

U.S. PATENT DOCUMENTS

3,049,411 8/1962 Gelman et al. 435/20
3,378,463 4/1968 Guilbault et al. 435/20
3,515,644 6/1970 Kramer et al. 435/20
3,526,480 9/1970 Findl et al. 422/66
3,539,452 11/1970 Penicnak 435/20
3,689,224 9/1972 Agnew et al. 435/20
3,715,298 2/1973 Goodson et al. 435/20
3,730,841 5/1973 Salvatore et al. 435/182
3,741,876 6/1973 Guilbault et al. 435/20
3,809,616 5/1974 Schmitt et al. 435/20
4,059,491 11/1977 Iwasa et al. ..... 23/230 B

OTHER PUBLICATIONS

Makinen, et al., "Reactivity and Cryoenzymology of Enzymes in the Crystalline State," *Ann. Rev. Biophys. Bioeng.* 1977, pp. 301-315.

Primary Examiner—Peter A. Hruskoci
Attorney, Agent, or Firm—Merchant, Gould, Smith, Edell, Welter & Schmidt

[57] **ABSTRACT**

The stability of a cholinesterase (particularly a cholinesterase solution impregnated into a porous material and air-dried) can be improved by: (a) buffering the cholinesterase solution with a zwitterionic buffer, e.g. a buffer having a sulfonic acid group and a protonatable amine group, and, preferably, (b) further drying the impregnated, air-dried porous material under a high vacuum (e.g. 0.01 mm Hg or less) at normal ambient temperatures. The most useful porous materials are sheet-like in nature; that is, they have only two major surfaces. An impregnated, sheet-like material of this invention can be used in a cholinesterase inhibitor detector kit. A typical kit of this type provides a simple means for detecting, inter alia, environmental cholinesterase-inhibiting pollutant, e.g. organophosphorous pesticides and nerve agents.

19 Claims, No Drawings

134

United States Patent [19]

Wandrey et al.

[11] **4,326,031**

[45] **Apr. 20, 1982**

[54] **PROCESS FOR THE CONTINUOUS ENZYMATIC CHANGE OF WATER SOLUBLE α-KETOCARBOXYLIC ACIDS INTO THE CORRESPONDING α-HYDROXYCARBOXYLIC ACIDS**

[75] Inventors: **Christian Wandrey; Rolf Wichmann**, both of Jülich; **Wolfgang Leuchtenberger**, Bruchköbel; **Maria-Regina Kula**, Wolfenbüttel; **Andreas Bückmann**, Braunschweig-Stöckheim, all of Fed. Rep. of Germany

[73] Assignee: **Degussa AG**, Frankfurt, Fed. Rep. of Germany

[21] Appl. No.: **172,444**

[22] Filed: **Jul. 25, 1980**

[30] **Foreign Application Priority Data**

Jul. 25, 1979 [DE] Fed. Rep. of Germany 2930087

[51] **Int. Cl.**[3] **C12P 7/42**

[52] **U.S. Cl.** **435/146**; 435/180; 435/288

[58] **Field of Search** 435/146, 180, 26, 288

[56] **References Cited**

U.S. PATENT DOCUMENTS

4,229,529 10/1980 Michal et al. 435/26
4,266,026 5/1981 Breslav 435/288

FOREIGN PATENT DOCUMENTS

648917 9/1962 Canada 435/146

OTHER PUBLICATIONS

Immobilized Enzymes, 1978, Wiley & Sons, N. Y., Chibata, Editor, pp. 80, 81.

Primary Examiner—Hiram Bernstein
Attorney, Agent, or Firm—Cushman, Darby & Cushman

[57] **ABSTRACT**

Water soluble α-ketocarboxylic acids are continuously converted in a membrane reactor into the corresponding α-hydrocarboxylic acids. The conversion takes place in the presence of a substrate specific dehydrogenase and of a nicotinamide-adenine-dinucleotide (NAD+/NADH) enlarged in molecular weight through linkage to a water soluble polymer as coenzyme. Simultaneously NADH is regenerated continuously from NAD+ in presence of a formate dehydrogenase and from formate ion. The membrane must have a mean pore diameter of 1 to 3 nm. As coenzyme there is employed 0.1 to 10 mmol/l of NAD+/NADH present bound to a water soluble polymer having an average molecular weight between 500 and 50,000. There is continuously supplied to the reactor a substrate stream which contains 50 to 100% of the maximum amount soluble, but not over 2,000 mmol/l, of the reacting α-ketocarboxylic acid in the form of a water soluble salt and 100 to 6,000 mmol/l of a formate. There is maintained over the membrane a differential pressure of 0.1 to 15 bar. There is continuously drawn off behind the membrane a filtrate stream containing the α-hydroxy acid formed.

14 Claims, No Drawings

United States Patent [19]

Litchfield et al.

[11] **4,327,181**

[45] **Apr. 27, 1982**

[54] **AEROBIC SUBMERGED FERMENTATION OF SPORULATING, ECTOMYCORRHIZAL FUNGI**

[75] Inventors: **John H. Litchfield; William T. Lawhon, Jr.**, both of Worthington, Ohio

[73] Assignee: **Battelle Development Corporation**, Columbus, Ohio

[21] Appl. No.: **150,095**

[22] Filed: **May 15, 1980**

[51] **Int. Cl.**[3] **C12N 11/14**

[52] **U.S. Cl.** **435/176**; 435/242; 435/911

[58] **Field of Search** 435/254, 911, 818, 242, 435/176

[56] **References Cited**

U.S. PATENT DOCUMENTS

3,580,811 5/1971 Hidy 435/911
4,051,314 9/1977 Ohtsuka et al. 435/911
4,162,939 7/1979 Yoshikumi 435/911
4,237,233 12/1980 Yoshikumi et al. 435/254

FOREIGN PATENT DOCUMENTS

2032456 5/1980 United Kingdom 435/254

OTHER PUBLICATIONS

Microbial Processes: Promising Technologies for Developing Countries, National Academy of Sciences 1979, Chap. 3, Soil Sii. Soc. Am. T., v 42, p. 906, (1978).

Primary Examiner—Hiram Bernstein
Attorney, Agent, or Firm—Barry S. Bissell

[57] **ABSTRACT**

Cultures of *Pisolithus tinctorius* and *Thelephora terrestris* can be grown by aerobic submerged fermentation in modified Pridham-Gottlieb medium at about pH 4-7 on a vermiculite carrier.

5 Claims, No Drawings

United States Patent [19]
Bull
[11] **4,320,194**
[45] **Mar. 16, 1982**

[54] **PROCESS FOR THE PRODUCTION OF CARRIER PARTICLES FROM YEAST CELLS AND FOR PRODUCING DIAGNOSTIC AGENTS THEREFROM AND TEST KITS CONTAINING SUCH AGENTS**

[75] Inventor: **Frederick G. Bull**, West Wellow, England

[73] Assignee: **Gist-Brocades N.V.**, Delft, Netherlands

[21] Appl. No.: **172,992**

[22] Filed: **Jul. 28, 1980**

[30] **Foreign Application Priority Data**

Jul. 30, 1979 [GB] United Kingdom 26508/79

[51] **Int. Cl.**[3] **G01N 33/54**
[52] **U.S. Cl.** ..... **435/7**; 435/174; 435/175; 435/255; 435/810; 424/12; 23/230 B
[58] **Field of Search** ..... 435/7, 810, 175, 255, 435/260, 174; 424/8, 12; 23/230 B

[56] **References Cited**

U.S. PATENT DOCUMENTS

3,553,310 1/1971 Cszimas et al. 424/8
3,639,558 2/1972 Cszimas et al. 424/12
3,652,761 3/1972 Weetall 424/12
3,987,159 10/1976 Spona et al. 424/8
4,107,287 8/1978 Morton et al. 435/7

Primary Examiner—Benoit Castel
Attorney, Agent, or Firm—Hammond & Littell, Weissenberger and Muserlian

[57] **ABSTRACT**

Yeast cells are converted into carrier particles useful as carriers for proteins and other materials useful in agglutination tests by cross-linking the proteins of the cell cytoplasm followed by stabilization of the carbohydrates of the cell wall by reaction with an epoxide. The stabilized cells obtained may be dyed and may be esterified or etherified to block the hydroxyl groups in their surfaces. They may be coupled to the protein or other material by activation, e.g. with cyanuric chloride, followed by reaction with the protein or other material to produce diagnostic agents useful in test kits.

18 Claims, No Drawings

United States Patent [19]
Maselli et al.
[11] **4,321,323**
[45] **Mar. 23, 1982**

[54] **CARBOHYDRATE PROCESS**

[75] Inventors: **John A. Maselli**, Wilton; **Robert O. Horwath**, Westport, both of Conn.

[73] Assignee: **Standard Brands Incorporated**, New York, N.Y.

[21] Appl. No.: **160,758**

[22] Filed: **Jun. 18, 1980**

[51] **Int. Cl.**[3] **C12P 7/26**; C12P 19/02
[52] **U.S. Cl.** **435/105**; 435/148; 435/182; 435/190; 435/813; 435/819
[58] **Field of Search** 435/105, 72, 148, 190, 435/147, 813, 819, 182

[56] **References Cited**

U.S. PATENT DOCUMENTS

3,911,140 10/1975 Osborne et al. ..... 435/813 X
4,102,742 7/1978 Klose et al. ..... 435/813 X
4,246,347 1/1981 Neidleman et al. 435/105
4,247,641 1/1981 Neidleman et al. 435/157

OTHER PUBLICATIONS

Skoog et al., *Analytical Chemistry*, Holt, Rinehart and Winston, New York, 319, 507–509 (1965).
Sienko et al., *Chemistry: Principles and Properties*, McGraw-Hill Book Co., New York, 249–254 (1966).
Hackh's Chemical Dictionary, McGraw-Hill Book Co., New York, 571 (1969).

Primary Examiner—Esther M. Kepplinger
Attorney, Agent, or Firm—Richard Kornutik

[57] **ABSTRACT**

Disclosed are methods of producing glucosone which comprises enzymatically oxidizing glucose with glucose-2-oxidase in a first zone and separating the concomitantly produced hydrogen peroxide from said first zone through a semi-permeable membrane into a second zone, said membrane being permeable only to compounds of a molecular weight of less than about 100.

11 Claims, No Drawings

United States Patent [19]
Maselli et al.
[11] **4,321,324**
[45] **Mar. 23, 1982**

[54] **PROCESS FOR MAKING GLUCOSONE**

[75] Inventors: **John A. Maselli**, Wilton; **Robert O. Horwath**, Westport, both of Conn.

[73] Assignee: **Standard Brands Incorporated**, New York, N.Y.

[21] Appl. No.: **160,763**

[22] Filed: **Jun. 18, 1980**

[51] **Int. Cl.**[3] **C12P 7/26**; C12P 17/02; C12P 19/02
[52] **U.S. Cl.** **435/105**; 435/123; 435/148; 435/182; 435/190; 435/813; 435/819
[58] **Field of Search** 435/105, 148, 123, 190, 435/147, 813, 819, 182, 155, 157, 158

[56] **References Cited**

U.S. PATENT DOCUMENTS

3,911,140 10/1975 Osborne et al. ..... 435/813 X
4,102,742 7/1978 Klose et al. ..... 435/813 X
4,246,347 1/1981 Neidleman et al. 435/105
4,247,641 1/1981 Neidleman et al. ..... 435/157 X

FOREIGN PATENT DOCUMENTS

7176 1/1980 European Pat. Off. .

OTHER PUBLICATIONS

Milas et al., *JACS*, 58, 1302–1304, (1936).
Milas et al., *JACS*, 59, 2345–2347, (1937).
Milas et al., *JACS*, 59, 543–544, (1937).
Milas, *JACS*, 59, 2342–2344, (1937).

Primary Examiner—Esther M. Kepplinger
Attorney, Agent, or Firm—Richard Kornutik

[57] **ABSTRACT**

Disclosed are methods of producing glucosone which comprises enzymatically oxidizing glucose with glucose-2-oxidase in a first zone and separating the concomitantly produced hydrogen peroxide from said first zone through a semi-permeable membrane into a second zone wherein an alkene is reacted with said hydrogen peroxide to form oxygenated products of said alkene, said membrane being permeable only to compounds of a molecular weight of less than about 100.

8 Claims, No Drawings

United States Patent [19]
Chen et al.
[11] **4,321,327**
[45] **Mar. 23, 1982**

[54] **PREPARATION OF SPHERICAL SHAPED MYCELIAL PELLETS**

[75] Inventors: **Li F. Chen**; **Cheng S. Gong**; **George T. Tsao**, all of West Lafayette, Ind.

[73] Assignee: **Purdue Research Foundation**, West Lafayette, Ind.

[21] Appl. No.: **100,816**

[22] Filed: **Dec. 6, 1979**

[51] **Int. Cl.**[3] **C12P 7/06**; C12P 1/02; C12N 11/02; C12N 11/12
[52] **U.S. Cl.** **435/161**; 435/171; 435/174; 435/177; 435/179; 435/254; 435/288
[58] **Field of Search** 435/174, 176, 177, 178, 435/179, 180, 182, 253, 254, 161, 170, 171, 288

[56] **References Cited**

U.S. PATENT DOCUMENTS

4,090,022 5/1978 Tsao et al. ..... 435/179 X
4,208,482 6/1980 Ehrenthal et al. 435/178

OTHER PUBLICATIONS

Atkinson et al., The Completely Mixed Microbial Film Fermenter, Trans. Instn. Chem. Engrs., vol. 50, 1972, pp. 208–216.
Jack, T. R., The Immobilization of Whole Cells, Advances in Biochem. Eng., vol. 5, 1977, pp. 128–135 & 140–141.

Primary Examiner—David M. Naff
Attorney, Agent, or Firm—Cushman, Darby & Cushman

[57] **ABSTRACT**

Spherical shaped mycelial pellets having a support core and which are suitable for biocatalytic conversion of organic compounds are produced by dissolving a cellulose derivative in a solvent to form a solution, mixing spores of a mycelial microorganism with the solution, precipitating the cellulose derivative to form porous beads containing the spores, and incubating the beads in a culture medium. Alternatively, the pellets may be produced by dissolving agar in water, mixing the agar solution with spores of a mycelial microorganism, precipitating the agar to form beads containing the spores and incubating the beads in a culture medium.

28 Claims, No Drawings

United States Patent [19]

Cabane et al.

[11] **4,318,988**

[45] **Mar. 9, 1982**

[54] **PROCESS FOR BIOLOGICAL DENITRIFICATION OF EFFLUENTS**

[75] Inventors: **Bruno Cabane**, St. Cloud; **Joel Vergnault**, Argenteuil, both of France

[73] Assignee: **PCUK Produits Chimiques Ugine Kuhlmann**, Paris, France

[21] Appl. No.: **106,037**

[22] Filed: **Dec. 21, 1979**

Related U.S. Application Data

[62] Division of Ser. No. 922,343, Jul. 6, 1978, Pat. No. 4,209,390.

[30] **Foreign Application Priority Data**

Jul. 8, 1977 [FR] France 77 21119

[51] **Int. Cl.**[3] **C12N 11/14**

[52] **U.S. Cl.** **435/176**; 435/253

[58] **Field of Search** ..... 210/2, 11, 12, 16, 17, 210/150, 151, DIG. 28, 610, 611, 615, 616, 617, 618, 631, 903; 435/168, 174, 176, 177, 253, 288, 813

[56] **References Cited**

U.S. PATENT DOCUMENTS

3,617,540	11/1971	Bishop	210/16
3,709,364	1/1973	Savage	210/11
3,728,279	4/1973	Salomone	210/11
3,749,245	7/1973	Kerecz	210/12
3,829,377	8/1974	Hashimoto	210/11
3,846,289	11/1974	Jeris	210/11
3,957,632	5/1976	Knopp	210/16
4,032,407	6/1977	Scott	435/176
4,043,936	8/1977	Francis	210/11
4,104,167	8/1978	Besik	210/197
4,209,390	6/1980	Cabane et al.	435/176

FOREIGN PATENT DOCUMENTS

50-527147	7/1975	Japan	210/DIG. 28
50-152552	12/1975	Japan	210/DIG. 28
51-48560	4/1976	Japan	210/DIG. 28
612655	8/1979	Switzerland	210/16

OTHER PUBLICATIONS

Microbiology, Reid, McGraw-Hill, New York, 1972, pp. 107–113 and 142–143.

Primary Examiner—Ernest G. Therkorn
Attorney, Agent, or Firm—Pennie & Edmonds

[57] **ABSTRACT**

The present invention is directed to a process for biological denitrification of effluents, containing up to 10 g/l of nitric nitrogen, which comprises using an active denitrification support made of selected high performance denitrifying bacteria fixed on a neutral support.

1 Claim, No Drawings

United States Patent [19]

Thomson et al.

[11] **4,318,990**

[45] **Mar. 9, 1982**

[54] **SEPARATION OF PROTEASES FROM FLUIDS**

[75] Inventors: **Alan R. Thomson**, Abingdon; **Brynley J. Miles**, Cirencester; **John C. Caygill**, Finchley; **David J. Moore**, Shirley, all of England

[73] Assignee: **United Kingdom Atomic Energy Authority**, London, England

[21] Appl. No.: **149,900**

[22] Filed: **May 15, 1980**

Related U.S. Application Data

[63] Continuation of Ser. No. 40,124, May 18, 1979, abandoned.

[30] **Foreign Application Priority Data**

May 26, 1978 [GB] United Kingdom 23669/78

[51] **Int. Cl.**[3] **C12N 9/50**; C12N 11/14

[52] **U.S. Cl.** **435/219**; 435/176; 435/183; 435/188; 435/815

[58] **Field of Search** ..... 435/176, 188, 219, 239, 435/815, 183; 252/455 R

[56] **References Cited**

U.S. PATENT DOCUMENTS

3,095,358	6/1963	Meister	435/188 X
3,293,143	12/1966	Heinicke	435/188
3,850,751	11/1974	Messing	435/176
3,943,072	3/1976	Thomson et al.	252/455 R

FOREIGN PATENT DOCUMENTS

551339	3/1977	U.S.S.R.	435/815

Primary Examiner—David M. Naff
Attorney, Agent, or Firm—Larson and Taylor

[57] **ABSTRACT**

Proteases are separated from fluids by contacting a fluid with a porous inorganic material such as porous titania particles to sorb the protease and then eluting the protease from the inorganic material. Proteases which may be separated are the sulphydryl proteases including papain, stem bromelain, fruit bromelain, ficin, calotropain and mexicain. Elution of the protease may be carried out with plant juice from which protease has previously been removed. The porous inorganic material is preferably that prepared by mixing a finely divided sorptive inorganic material with a solid fugitive additive and a solvent to dissolve the fugitive, forming discrete particles from the resultant mixture and heating the particles to remove the solvent and fugitive to produce discrete particles of the inorganic material for contacting with the fluid.

3 Claims, No Drawings

United States Patent [19]

Messing

[11] **4,321,141**

[45] **Mar. 23, 1982**

[54] **METHOD FOR PROCESSING WASTE**

[75] Inventor: **Ralph A. Messing**, Horseheads, N.Y.

[73] Assignee: **Corning Glass Works**, Corning, N.Y.

[21] Appl. No.: **139,228**

[22] Filed: **Apr. 11, 1980**

Related U.S. Application Data

[60] Division of Ser. No. 44,505, Jun. 1, 1979, abandoned, which is a continuation-in-part of Ser. No. 880,779, Feb. 24, 1978, abandoned.

[51] **Int. Cl.**[3] **C02F 3/30**

[52] **U.S. Cl.** **210/603**; 210/615; 210/630; 435/176

[58] **Field of Search** 210/603, 605, 615–618, 210/630, 150, 151; 435/176

[56] **References Cited**

U.S. PATENT DOCUMENTS

3,580,840	5/1971	Uridil	210/611
3,929,630	12/1975	Smith	210/617
4,067,801	1/1978	Ishida et al.	210/603
4,127,447	11/1978	Griffith et al.	210/631 X
4,153,510	5/1979	Messing et al.	435/176
4,221,657	9/1980	Lebesgue	210/616

Primary Examiner—Thomas G. Wyse
Attorney, Agent, or Firm—William E. Maycock

[57] **ABSTRACT**

A method for processing biodegradable organic waste in an aqueous medium, which method comprises serially passing an organic waste-containing aqueous medium through a first, hydrolytic redox bioreactor and a second, anaerobic bioreactor, with each bioreactor containing immobilized microbes. The disclosure also provides an apparatus and process for determining the biochemical oxygen demand of an organic waste in an aqueous medium.

39 Claims, 2 Drawing Figures

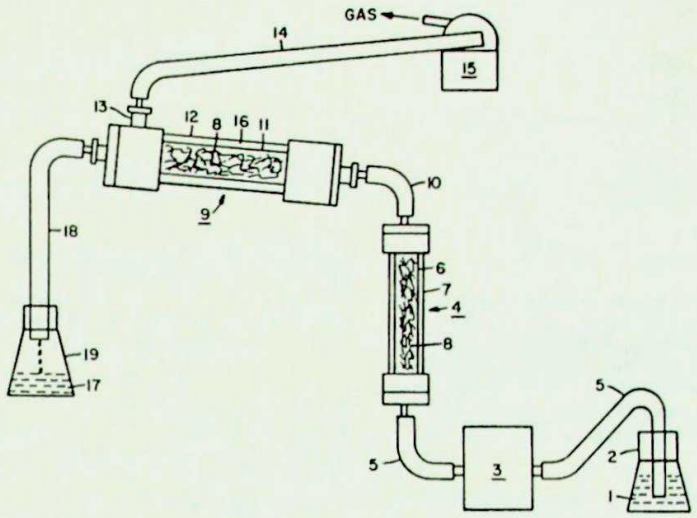

United States Patent [19]
Olson et al.
[11] **4,310,554**
[45] **Jan. 12, 1982**

[54] **PREPARATION OF CHEESE WITH MICROENCAPSULATED ENZYMES**

[75] Inventors: **Norman F. Olson**, Madison, Wis.; **Edward L. Magee, Jr.**, Plano, Tex.

[73] Assignee: **Wisconsin Alumni Research Foundation**, Madison, Wis.

[21] Appl. No.: **56,315**

[22] Filed: **Jul. 10, 1979**

[51] **Int. Cl.**[3] **A23C 19/02**; C12N 11/04

[52] **U.S. Cl.** **426/40**; 426/38; 426/61; 426/89; 426/582; 435/174; 435/177; 435/182

[58] **Field of Search** 426/89, 36, 38, 40, 426/61, 602, 582, 63, 601; 435/174, 177, 182

[56] **References Cited**

U.S. PATENT DOCUMENTS

3,223,532	12/1965	Pinkalla et al.	426/602
3,295,991	1/1967	Cort et al.	426/38 X
3,561,975	2/1971	Luebering et al.	426/63 X
3,650,768	3/1972	Roberts	426/36 X
3,792,171	2/1974	Little	426/38
3,793,464	2/1974	Rusch	426/601 X
3,889,004	6/1975	Schmidt et al.	426/582 X
3,899,605	8/1975	Schaap	426/582
3,939,290	2/1976	Terada et al.	426/602 X
4,172,900	10/1979	Dooley	426/38

FOREIGN PATENT DOCUMENTS

2602260	8/1977	Fed. Rep. of Germany	426/61
49-24235	6/1974	Japan	426/61
846777	8/1960	United Kingdom	426/602

Primary Examiner—David M. Naff
Attorney, Agent, or Firm—McDougall, Hersh & Scott

[57] **ABSTRACT**

A food processing component such as an enzyme extract is microencapsulated by mixing the food processing component in aqueous medium with an oleaginous material such as milk fat to form a water-in-oil emulsion and then dispersing the water-in-oil emulsion in an aqueous liquid such as milk to form a suspension of oleaginous microcapsules containing the food processing compoent. By forming microcapsules containing a cheese flavor producing enzyme extract in milk and making cheese curd from the milk, accelerated flavor production can be obtained during ripening of the cheese curd.

19 Claims, 2 Drawing Figures

United States Patent [19]
Halbert et al.
[11] **4,317,810**
[45] * **Mar. 2, 1982**

[54] **WAFFLE-LIKE MATRIX FOR IMMUNOASSAY AND PREPARATION THEREOF**

[75] Inventors: **Seymour P. Halbert**, Miami; **Milton Anken**, N. Miami Beach, both of Fla.

[73] Assignee: **Cordis Laboratories, Inc.**, Miami, Fla.

[*] Notice: The portion of the term of this patent subsequent to Jun. 5, 1996, has been disclaimed.

[21] Appl. No.: **126,525**

[22] Filed: **Mar. 2, 1980**

Related U.S. Application Data

[63] Continuation of Ser. No. 617,746, Sep. 29, 1975, abandoned.

[51] **Int. Cl.**[3] **G01N 31/06**; G01N 33/48; G01N 33/52; G01N 33/54

[52] **U.S. Cl.** ..... **424/12**; 23/230 B; 260/112 R; 422/50; 422/57; 422/58; 422/61; 422/68; 435/180; 435/181; 424/1; 424/1.5; 424/13; 424/78; 525/54.1

[58] **Field of Search** ..... 424/1, 11, 12, 13, 78; 260/6, 8, 112 R; 435/180, 181; 23/230 B; 422/50, 57, 58, 61, 68

[56] **References Cited**

U.S. PATENT DOCUMENTS

3,507,618	4/1970	Murty	424/2 X
3,700,609	10/1972	Tregear	424/12 X
3,853,987	12/1974	Dreyer	424/1
4,157,280	6/1979	Halbert	23/230 B

OTHER PUBLICATIONS

Grabow, The J. of Infect. Dis., vol. 127, Feb. 1973, pp. 183-186.
Protapol DI/1, Imperial Chem. Ind., Melbourne, Australia, package flyer, 2 pp.
Bikarman, Physical Surfaces, Acd. Press, N.Y., Physical Chem. Monograph Series, vol. 20, 1970, pp. 169-193, 208-213.
British Catalogue of Plastics, The Nat. Trade Press, London, 1948, p. 109.

Primary Examiner—Anna P. Fagelson
Attorney, Agent, or Firm—Kenway & Jenney

[57] **ABSTRACT**

A disc-shaped insoluble matrix is formed of a polymeric material having a layer of reactive groups which react with proteins binding them covalently and uniformly to its surface. An antibody adapted for use in immunoassay of antigens associated with hepatitis is covalently bonded to the reactive groups. The matrix is provided with irregular, e.g., waffle-like, surfaces designed to increase the amount of antibody that will be in contact with a test solution such as serum.

10 Claims, 2 Drawing Figures

United States Patent [19]
Busby et al.
[11] **4,317,879**
[45] **Mar. 2, 1982**

[54] **GLUCOSE ANALYZER MEMBRANE CONTAINING IMMOBILIZED GLUCOSE OXIDASE**

[75] Inventors: **Michael G. Busby**, Madison; **Diane E. Hartwig**, Oregon, both of Wis.

[73] Assignee: **Airco, Inc.**, Montvale, N.J.

[21] Appl. No.: **36,905**

[22] Filed: **May 7, 1979**

[51] **Int. Cl.**[3] **C12Q 1/26**; C12Q 1/54; C12N 11/08

[52] **U.S. Cl.** ..... **435/14**; 204/195 B; 435/25; 435/180; 435/182

[58] **Field of Search** ..... 435/14, 25, 180, 182, 435/188, 189, 190, 288; 204/195 B

[56] **References Cited**

U.S. PATENT DOCUMENTS

3,542,662	11/1970	Hicks et al.	435/190 X
3,933,593	1/1976	Sternberg	435/14
3,972,274	9/1976	Newman	435/14 X
4,004,979	1/1977	Arvameas et al.	435/181 X

OTHER PUBLICATIONS

Updike et al, Continuous Glucose Monitor Based on an Immobilized Enzyme Electrode Detector, J. Lab. Clin. Med., vol. 93, No. 4, 4/79 (pp. 518-527).

Primary Examiner—David M. Naff
Attorney, Agent, or Firm—Roger M. Rathbun; Larry R. Cassett

[57] **ABSTRACT**

A membrane and the method of making the same is disclosed for use with glucose analyzers to detect the level of glucose in liquid mediums such as whole blood. The membrane comprises a thin base wafer of a hydrophobic fluorocarbon material such as polytetrafluoroethylene (TEFLON). The wafer is initially etched by removing surface fluorides to produce a hydrophilic surface and is then contacted with a mixed reagent formed by combining in a volume ratio of about 1:1:1 about 4% paraformaldehyde in water, about 5% bovine serum albumin in water and about 10% glucose oxidase in water. The resultant membrane contains glucose oxidase covalently bonded to the surface of the base wafer.

5 Claims, 1 Drawing Figure

United States Patent [19]
Wood et al.
[11] **4,312,946**
[45] **Jan. 26, 1982**

[54] **PREPARATION AND USE OF ENZYMES BOUND TO POLYURETHANE**

[75] Inventors: **Louis L. Wood**, Rockville; **Frank J. Hartdegen**; **Peter A. Hahn**, both of Columbia, all of Md.

[73] Assignee: **W. R. Grace & Co.**, New York, N.Y.

[21] Appl. No.: **362,488**

[22] Filed: **May 21, 1973**

Related U.S. Application Data

[63] Continuation-in-part of Ser. No. 250,012, May 3, 1972, abandoned.

[51] **Int. Cl.**[3] **C07G 7/02**

[52] **U.S. Cl.** **435/182**; 435/180

[58] **Field of Search** ..... 195/63, 68, DIG. 11; 435/180, 182

[56] **References Cited**

U.S. PATENT DOCUMENTS

3,574,062	4/1971	Sato	195/63
3,672,955	6/1972	Stanley	195/68
3,705,084	12/1972	Reynolds	195/63
3,791,927	2/1974	Forgione et al.	195/63

Primary Examiner—Maurice J. Welsh
Attorney, Agent, or Firm—P. M. Pippenger

[57] **ABSTRACT**

To chemically bind either impure or purified enzymes to polyurethane to produce insolubilized bound enzymes which are still enzymically active and which may be more stable than the original enzyme, and which can be reused without appreciable activity loss and whose physical characteristics can be varied depending on the application for which they are intended.

12 Claims, No Drawings

United States Patent [19]
Ichimura
[11] **4,269,941**
[45] **May 26, 1981**

[54] **METHOD FOR ENZYME IMMOBILIZATION**

[75] Inventor: **Kunihiro Ichimura**, Yokohama, Japan

[73] Assignees: **Agency of Industrial Science and Technology; Ministry of International Trade & Industry**, both of Tokyo, Japan

[21] Appl. No.: **62,486**

[22] Filed: **Jul. 31, 1979**

[30] **Foreign Application Priority Data**

Aug. 9, 1978 [JP] Japan 53/96804

[51] **Int. Cl.**[3] **C12N 11/04**
[52] **U.S. Cl.** **435/182**; 435/180
[58] **Field of Search** 435/174, 177, 180, 181, 435/182

[56] **References Cited**

U.S. PATENT DOCUMENTS

3,959,078	5/1976	Guire	435/181 X
4,160,698	7/1979	Miyairi et al.	435/180 X

OTHER PUBLICATIONS

Ichimura et al., Immobilization of Enzymes with Use of Photosensitive Polymers Bearing Stilbazolium Groups, Chem. Abstr., vol. 90: 68499h, 2/1979 (p. 205), Chem. Lett., vol. 11, 1978 (pp. 1289–1292).
Samokhim et al., Photochemical Immobilization of Enzymes, Chem. Abstr., vol. 90: 2435c, 1/1979 (p. 245).

Primary Examiner—David M. Naff
Attorney, Agent, or Firm—Oblon, Fisher, Spivak, McClelland & Maier

[57] **ABSTRACT**

Enzymes are immobilized by dissolving in water a photo-crosslinking resin containing stilbazolium groups, vinyl alcohol units and vinyl acetate units, adding an enzyme to the resultant aqueous solution and exposing the enzyme-containing resin solution to light to induce a crosslinking reaction of the photo-crosslinking resin and produce a polymer containing the enzyme entrapped therein.

8 Claims, No Drawings

United States Patent [19]
Ushiro
[11] **4,263,400**
[45] **Apr. 21, 1981**

[54] **IMMOBILIZED ENZYMES**

[75] Inventor: **Soichiro Ushiro**, Kokubunji, Japan

[73] Assignee: **CPC International Inc.**, Englewood Cliffs, N.J.

[21] Appl. No.: **2,839**

[22] Filed: **Jan. 11, 1979**

[30] **Foreign Application Priority Data**

May 12, 1978 [JP] Japan 53-55691

[51] **Int. Cl.**[3] **C12N 11/02**; C12P 19/24; C12N 9/92
[52] **U.S. Cl.** **435/177**; 435/94; 435/179; 435/180; 435/234; 435/815
[58] **Field of Search** 435/94, 174, 177, 178, 435/179, 180, 902, 234; 426/814, 815

[56] **References Cited**

U.S. PATENT DOCUMENTS

3,625,828	12/1971	Brownewell	435/902 X
3,708,397	1/1973	Sipos	435/179 X
3,909,354	9/1975	Thompson et al.	435/179
3,956,065	5/1976	Idaszak et al.	435/94

FOREIGN PATENT DOCUMENTS

1371489	10/1974	United Kingdom	435/94

Primary Examiner—David M. Naff

[57] **ABSTRACT**

When immobilizing enzymes such as glucose isomerase by adsorption on a carrier such as an ion exchange resin, the enzyme prior to adsorption on the carrier is separated from a high molecular weight, non-dialyzable polysaccharide which inhibits adsorption of the enzyme to the carrier.

10 Claims, 1 Drawing Figure

United States Patent [19]
Rohrbach et al.
[11] **4,218,363**
[45] **Aug. 19, 1980**

[54] **PREPARATION OF SUPPORT MATRICES FOR IMMOBILIZED ENZYMES**

[75] Inventors: **Ronald P. Rohrbach**, Forest Lake; **George W. Lester**, Hoffman Estates, both of Ill.

[73] Assignee: **UOP Inc.**, Des Plaines, Ill.

[21] Appl. No.: **951,947**

[22] Filed: **Oct. 16, 1978**

[51] **Int. Cl.**[2] **C08K 9/00**
[52] **U.S. Cl.** **260/42.14**; 435/180; 260/42.43; 260/42.54; 525/344; 525/374; 525/384
[58] **Field of Search** 526/31, 49, 55; 195/63; 260/42.14, 42.54, 42.43

[56] **References Cited**

U.S. PATENT DOCUMENTS

3,519,538	7/1970	Messing et al.	195/63
3,556,945	1/1971	Messing et al.	260/112.5 R
3,650,900	3/1972	Levin et al.	195/63
3,654,003	4/1972	Grossman	264/139
3,705,084	12/1972	Reynolds	195/63
3,783,101	1/1974	Tomb et al.	195/63
3,796,634	3/1974	Haynes et al.	195/63
3,821,083	6/1974	VanLeemputten et al.	195/63

Primary Examiner—Melvyn I. Marquis
Attorney, Agent, or Firm—James R. Hoatson, Jr.; Raymond H. Nelson; William H. Page, II

[57] **ABSTRACT**

Support matrices for immobilized enzymes may be prepared by treating a solid porous, inorganic, water-insoluble support such as an alumina with a prepolymerized polymeric compound. After treating the solid support the resultant organic-inorganic composite may then be derivatized, one example of derivatization being nitration of the composite with nitric acid and reducing the nitro-substituted composite to form an aminopolystyrene alumina composite. This composite is then treated with a bifunctional monomer to form a copolymeric which is substantially entrapped in the pores of the solid support, said copolymeric material containing functionalized pendent groups to which an enzyme may be coupled to form an immobilized enzyme conjugate.

5 Claims, No Drawings

United States Patent [19]
Sugitachi et al.
[11] **4,273,873**
[45] **Jun. 16, 1981**

[54] **PREPARATION OF ANTITHROMBOGENIC POLYMERIC MATERIALS**

[75] Inventors: **Akio Sugitachi**, Uozaki-kitamachi; **Kunihiko Takagi**, Kyoto; **Yasunori Yabushita**, Uji, all of Japan

[73] Assignee: **Unitika Ltd.**, Amagasaki, Japan

[21] Appl. No.: **844,856**

[22] Filed: **Oct. 25, 1977**

[51] **Int. Cl.**[3] **C12N 11/08**; A61F 1/00
[52] **U.S. Cl.** **435/180**; 3/1; 424/33; 424/78; 424/79; 424/94; 435/181; 435/215
[58] **Field of Search** ..... 195/63, 68, DIG. 11; 3/1; 424/32, 94, 33, 31, 39, 55, 78, 79; 435/215, 180, 181, 174

[56] **References Cited**

U.S. PATENT DOCUMENTS

3,511,684	5/1970	Huffaker	3/1 X
3,625,745	12/1971	Wright et al.	424/31 X
3,634,123	1/1972	Eriksson et al.	3/1 X
3,639,213	2/1972	Ginger et al.	195/68 X
3,673,612	7/1972	Merrill et al.	3/1
3,865,615	2/1975	Manly	3/1 X
4,055,635	10/1977	Green et al.	195/DIG. 11 X

OTHER PUBLICATIONS

Kunihiko, T., Immobilized Fibrin-Dissolving Enzyme For Prosthetics, Chemical Abstracts, vol. 86, 5/30/77 (161349m).
Zaborsky, O., Immobilized Enzymes, CRC Press, Cleveland, Ohio, 1973 (pp. 146–147).

Primary Examiner—David M. Naff
Attorney, Agent, or Firm—Sughrue, Rothwell, Mion, Zinn and Macpeak

[57] **ABSTRACT**

Antithrombogenic polymeric materials are prepared by bonding a synthetic fibrinolytic compound or a combination of a synthetic fibrinolytic compound and a fibrinolytic enzyme to a polymeric material. Bonding is preferably by covalent or ionic bonding. The antithrombogenic polymeric materials are useful for preparing various types of medical articles that come into contact with blood.

11 Claims, No Drawings

United States Patent [19]
Dorman et al.
[11] **4,210,723**
[45] **Jul. 1, 1980**

[54] **METHOD OF COUPLING A PROTEIN TO AN EPOXYLATED LATEX**

[75] Inventors: **Linneaus C. Dorman; Inder Mani,** both of Midland, Mich.

[73] Assignee: **The Dow Chemical Company,** Midland, Mich.

[21] Appl. No.: **854,930**

[22] Filed: **Nov. 25, 1977**

Related U.S. Application Data

[63] Continuation-in-part of Ser. No. 708,231, Jul. 23, 1976, abandoned.

[51] **Int. Cl.**[2] **C07G 7/00;** C07G 7/02; G01N 31/14

[52] **U.S. Cl.** ..... **435/180;** 435/7; 424/12; 23/915; 260/112 R

[58] **Field of Search** ..... 195/63, 68, DIG. 11, 195/103.5 A, 99; 260/112 R; 424/12; 23/230 B, 915

[56] **References Cited**

U.S. PATENT DOCUMENTS

3,639,558	2/1972	Csizmas et al	424/12
3,806,417	4/1974	Beaucamp et al.	195/63
3,821,084	6/1974	Matthews	195/68
3,841,970	10/1974	Matthews	195/63
3,844,892	10/1974	Matthews	195/68
3,849,253	11/1974	Harvey et al.	195/63 X
3,853,708	12/1974	Porath et al.	195/68
3,857,931	12/1974	Hager	260/112 R X
3,981,775	9/1976	Kenyon et al.	195/63 X
4,038,140	7/1977	Jaworek et al.	195/63
4,048,018	9/1977	Coughlin et al.	195/63
4,118,349	10/1978	Bonacker et al.	195/63 X

OTHER PUBLICATIONS

Fancoise et al., Copolymerization of Vinyl Aromatic Compounds With α,β-Unsaturated Epoxy Esters. Chemical Abstracts, vol. 71, 1969, (39646f).

Ludwig et al., Protein-or Peptide-Polystrene Latex Compositions, Chemical Abstracts, vol. 78, 1973 (96019x).

Primary Examiner—David M. Naff

[57] **ABSTRACT**

Proteins are coupled to polymer particles containing free epoxy groups in a latex. The polymer particles are about 0.15 to 1.5 micrometers in diameter, and have an inner core and an outer shell which contains the free epoxy groups. The coupled proteins are particularly useful in carrying out immunological tests.

12 Claims, No Drawings

United States Patent [19]
Miyake et al.
[11] **4,246,351**
[45] **Jan. 20, 1981**

[54] **PROTEIN ADSORBENT**

[75] Inventors: **Tetsuya Miyake,** Tokyo; **Kunihiko Takeda; Akihiko Ikeda,** both of Yokohama; **Masayuki Mizuno,** Nobeoka, all of Japan

[73] Assignee: **Asahi Kasei Kogyo Kabushiki Kaisha,** Osaka, Japan

[21] Appl. No.: **88,927**

[22] Filed: **Oct. 29, 1979**

Related U.S. Application Data

[60] Continuation of Ser. No. 942,716, Sep. 15, 1978, abandoned, which is a division of Ser. No. 841,271, Oct. 12, 1977, abandoned.

[30] **Foreign Application Priority Data**

Oct. 28, 1976 [JP] Japan 51/128868
May 10, 1977 [JP] Japan 52/52585

[51] **Int. Cl.**[3] **C08J 9/00**

[52] **U.S. Cl.** ..... **435/182;** 260/8; 260/112 R; 260/112 B; 260/122; 435/180; 435/815; 521/53; 521/142; 521/146; 521/147; 521/149; 521/150

[58] **Field of Search** ..... 435/180, 182, 815; 260/8, 112 R, 112 B, 122; 521/53

[56] **References Cited**

U.S. PATENT DOCUMENTS

3,418,262	12/1968	Werotte et al.	521/150
3,663,467	5/1972	Albright	521/150
3,767,600	10/1973	Albright	521/150
3,791,999	2/1974	Fuchiwaki et al.	521/150

Primary Examiner—Morton Foelak
Attorney, Agent, or Firm—Sprung, Felfe, Horn, Lynch & Kramer

[57] **ABSTRACT**

A novel protein adsorbent consisting essentially of a porous copolymer obtained by copolymerizing a monomer mixture comprising at least one cyano group-containing monomer and at least one cross-linkable monomer, said copolymer having an average pore diameter (d) of from 40 Å to 9,000 Å and a total pore volume of from $0.05\sqrt{X}$ ml to $1.5\sqrt{X}$ ml per gram of the copolymer in a dry state, in which X designates the weight proportion of said cross-linkable monomer expressed in terms of the percent by weight based on the total monomers. The present porous copolymer adsorbent has a remarkably high protein adsorbing capacity. The adorbent can advantageously be used for various purposes such as purification and separation of proteins, and removal of proteins. Copolymer-protein composites obtained by adsorption of proteins on the present porous copolymer also are industrially useful and have a wide variety of applications.

36 Claims, No Drawings

United States Patent [19]
Hirohara et al.
[11] **4,146,432**
[45] **Mar. 27, 1979**

[54] **IMMOBILIZED PROTEASES**

[75] Inventors: **Hideo Hirohara; Shigeyasu Nabeshima,** both of Ibaraki; **Tsuneyuki Nagase,** Takatsuki, all of Japan

[73] Assignee: **Sumitomo Chemical Company, Limited,** Osaka, Japan

[21] Appl. No.: **801,246**

[22] Filed: **May 27, 1977**

[30] **Foreign Application Priority Data**

May 31, 1976 [JP] Japan 51-63890
Jun. 24, 1976 [JP] Japan 51-75118

[51] **Int. Cl.**[2] **C07G 7/02**

[52] **U.S. Cl.** ..... **195/63;** 195/66 R; 195/68; 195/DIG. 11

[58] **Field of Search** ..... 195/63, 68, 66 R, DIG. 11

[56] **References Cited**

U.S. PATENT DOCUMENTS

3,597,220	8/1971	Weinrich et al.	195/63 X
3,616,229	10/1971	Wildi et al.	195/63
3,875,006	4/1975	Belloc et al.	195/63

OTHER PUBLICATIONS

Matz et al., Isolation of Proteolytic Enzymes from Solution as Dry Stable Derivatives of Cellulosic Ion Exchangers, American Chemical Society Journal, vol. 81, 1959, pp. 4024–4028.

Zaborsky, O., Immobilized Enzymes, CRC Press, Cleveland, Ohio, 1973, pp. 75–82.

Primary Examiner—David M. Naff
Attorney, Agent, or Firm—Cushman, Darby & Cushman

[57] **ABSTRACT**

Non-specific proteases produced by bacteria belonging to the genus Streptomyces are immobilized by adsorption on a specific class of anion exchangers to produce water-insoluble enzymatically active immobilized proteases.

11 Claims, No Drawings

United States Patent [19]
DeFilippi
[11] **4,229,536**
[45] **Oct. 21, 1980**

[54] **PROCESS FOR PREPARING IMMOBILIZED ENZYMES**

[75] Inventor: **Louis J. DeFilippi,** Arlington Heights, Ill.

[73] Assignee: **UOP Inc.,** Des Plaines, Ill.

[21] Appl. No.: **974,198**

[22] Filed: **Dec. 28, 1978**

[51] **Int. Cl.**[3] **C12N 11/14;** C12N 11/08; C12N 11/06

[52] **U.S. Cl.** **435/176;** 435/180; 435/181

[58] **Field of Search** 435/176, 180, 181, 174

[56] **References Cited**

U.S. PATENT DOCUMENTS

3,519,538	7/1970	Messing et al.	435/176
3,669,841	6/1972	Miller	435/176
3,705,084	12/1972	Reynolds	435/180
3,715,278	2/1973	Miller	435/181 X
3,783,101	1/1974	Tomb et al.	435/176
3,796,634	3/1974	Haynes et al.	435/180
3,802,997	4/1974	Messing	435/176
3,821,083	6/1974	Van Leemputten et al.	435/176
3,930,950	1/1974	Royer	435/176
4,071,409	1/1978	Messing et al.	435/176
4,072,566	2/1978	Lynn	435/176

Primary Examiner—David M. Naff
Attorney, Agent, or Firm—James R. Hoatson, Jr.; Raymond H. Nelson; William H. Page, II

[57] **ABSTRACT**

The activity and stability of immobilized enzymes may be improved by treating an immobilized enzyme comprising an enzyme covalently bound to polymeric material which is absorbed on an inorganic porous support material with a bifunctional monomeric material and a substrate followed by additional treatment with an enzyme and thereafter again treating the complex with additional bifunctional monomer and substrate.

15 Claims, No Drawings

United States Patent [19]
Silver
[11] **4,210,722**
[45] **Jul. 1, 1980**

[54] **PROTEIN IMMOBILIZER**

[75] Inventor: **Spencer F. Silver**, White Bear Lake, Minn.

[73] Assignee: **Minnesota Mining and Manufacturing Company**, St. Paul, Minn.

[21] Appl. No.: **851,492**

[22] Filed: **Nov. 14, 1977**

[51] Int. Cl.[2] C07G 7/02; C07G 7/00
[52] U.S. Cl. ..... 435/176; 23/230 B; 252/428; 260/112 R; 310/311; 424/12; 435/7; 435/180
[58] Field of Search ..... 195/63, 68, DIG. 11; 260/112 R, 32.6 A; 252/428, 430; 435/176, 177, 180, 7; 23/230 B; 424/12; 310/311

[56] **References Cited**

U.S. PATENT DOCUMENTS

3,705,084	12/1972	Reynolds	195/63
3,740,414	6/1973	Olson	260/32.6 A
3,796,634	3/1974	Haynes et al.	195/63
3,844,892	10/1974	Matthews	195/63 X
4,048,018	9/1977	Coughlin et al.	195/63 X
4,071,409	1/1978	Messing et al.	195/63
4,072,566	2/1978	Lynn	195/63

Primary Examiner—David M. Naff
Attorney, Agent, or Firm—Cruzan Alexander; Donald M. Sell; Carolyn A. Bates

[57] **ABSTRACT**

Biologically active proteins are immobilized on polar supports by first applying to the support a monolayer of a water-soluble polymer containing a β-hydroxyalkyleneamine moiety wherein the equivalent weight of the polymer based on the β-hydroxyalkyleneamine moiety is 87 to about 10,000. The protein irreversibly attaches to the polymer-treated support and retains substantially all of its biological activity.

30 Claims, No Drawings

United States Patent [19]
Chen et al.
[11] **4,251,632**
[45] **Feb. 17, 1981**

[54] **PREPARATION OF A BACTERIAL CELL AGGREGATE**

[75] Inventors: **Anthony H. Chen; Yun-Chi Jao**, both of Elkhart, Ind.

[73] Assignee: **Miles Laboratories, Inc.**, Elkhart, Ind.

[21] Appl. No.: **941,152**

[22] Filed: **Sep. 11, 1978**

[51] Int. Cl.[3] C12N 11/08; C12P 19/24
[52] U.S. Cl. 435/180; 435/94; 435/233; 435/902
[58] Field of Search 435/94, 174, 180, 182, 435/233, 902

[56] **References Cited**

U.S. PATENT DOCUMENTS

4,060,456	11/1977	Long	435/94

Primary Examiner—David M. Naff
Attorney, Agent, or Firm—Louis E. Davidson

[57] **ABSTRACT**

A shaped bacterial cell aggregate having increased hardness is produced by adding previously-produced dried finely-divided bacterial cell aggregate to bacterial cell aggregate subsequent to its formation but prior to its shaping.

6 Claims, No Drawings

United States Patent [19]
Hofreiter et al.
[11] **4,121,974**
[45] **Oct. 24, 1978**

[54] **PREPARATION OF RETROGRADATION-RESISTANT STARCHES WITH IMMOBILIZED AMYLASES**

[75] Inventors: **Bernard T. Hofreiter**, Peoria; **Karl L. Smiley**, Morton; **Joyce A. Boundy**, East Peoria, all of Ill.

[73] Assignee: **The United States of America as represented by the Secretary of Agriculture**, Washington, D.C.

[21] Appl. No.: **811,398**

[22] Filed: **Jun. 29, 1977**

[51] Int. Cl.[2] C12D 13/02
[52] U.S. Cl. ..... 195/7; 195/31 R; 195/115
[58] Field of Search ..... 195/47, 31 R, 63, 68, 195/DIG. 11, 115

[56] **References Cited**

U.S. PATENT DOCUMENTS

3,849,253	11/1974	Harvey et al.	195/68
4,011,137	3/1977	Thompson et al.	195/31 R
4,013,514	3/1977	Wildi et al.	195/31 R

OTHER PUBLICATIONS

Boundy et al., "Exoenzymic Activity of Alpha-Amylase Immobilized on a Phenol-Formaldehyde Resin", *Carbohydrate Research*, vol. 48, (1976), pp. 239-244.
Olson et al., "Lactase and other Enzymes bound to a Phenol-Formaldehyde Resin with Glutaraldehyde", *Journal Agr. Food Chem.* vol. 21, No. 3, (1973), pp. 440-445.
Barker et al., "Enzyme Reactors for Industry", *Process Biochemistry*, vol. 6, No. 10 (1971), pp. 11-12.

Primary Examiner—Thomas G. Wiseman
Attorney, Agent, or Firm—M. Howard Silverstein; David G. McConnell; Curtis P. Ribando

[57] **ABSTRACT**

Retrogradation-resistant starches of reduced molecular linearity are produced by preferentially hydrolyzing the amylose component of ordinary starches with amylases immobilized on porous carriers which are preferentially sorptive to amylose over amylopectin.

11 Claims, No Drawings

United States Patent [19]
Davis et al.
[11] **4,179,337**
[45] **Dec. 18, 1979**

[54] **NON-IMMUNOGENIC POLYPEPTIDES**

[76] Inventors: **Frank F. Davis**, 19 Farmingdale Rd., East Brunswick, N.J. 08816; **Theodorus Van Es**, 313 Overbrook Rd., Piscataway, N.J. 08854; **Nicholas C. Palczuk**, 45 W. Franklin St., Bound Brook, N.J. 08805

[21] Appl. No.: **819,831**

[22] Filed: **Jul. 28, 1977**

Related U.S. Application Data

[63] Continuation-in-part of Ser. No. 596,931, Jul. 17, 1975, abandoned, which is a continuation-in-part of Ser. No. 381,191, Jul. 20, 1973, abandoned.

[51] Int. Cl.[2] C07G 7/00; C07G 7/02; A61K 37/26; A61K 37/48
[52] U.S. Cl. ..... 435/181; 260/112.5 R; 260/112.7; 424/78; 424/94; 424/177; 424/178; 435/180
[58] Field of Search ..... 195/63, 68, DIG. 11; 424/94, 177, 178, 78; 260/112.5, 112 R, 6, 8, 112.7

[56] **References Cited**

U.S. PATENT DOCUMENTS

3,607,653	9/1971	Ziffer et al.	195/63
3,619,371	11/1971	Crook et al.	195/63
3,639,213	2/1972	Ginger et al.	195/63
3,645,852	2/1972	Axon et al.	195/68
3,788,948	1/1974	Kagedal et al.	195/68
3,959,080	5/1976	Orth et al.	195/68 X
4,002,531	1/1977	Royer	195/DIG. 11
4,055,635	10/1977	Green et al.	195/DIG. 11

Primary Examiner—David M. Naff
Attorney, Agent, or Firm—Omri M. Behr

[57] **ABSTRACT**

Polypeptides such as enzymes and insulin are coupled to polyethylene glycol or polypropylene glycol having a molecular weight of 500 to 20,000 daltons to provide a physiologically active non-immunogenic water soluble polypeptide composition. The polyethylene glycol or polypropylene glycol protect the polypeptide from loss of activity and the composition can be injected into the mammalian circulatory system with substantially no immunogenic response.

27 Claims, No Drawings

United States Patent [19]
Ishimatsu et al.
[11] **4,205,128**
[45] **May 27, 1980**

[54] **PROCESS FOR PRODUCING IMMOBILIZED ENZYME COMPOSITIONS**

[75] Inventors: **Yoshiaki Ishimatsu**, Machida; **Shigeki Shigesada**, Sagamihara; **Hiroyasu Suzuki**, Tokyo; **Hironoshin Kitagawa**; **Shoji Kimura**, both of Machida, all of Japan

[73] Assignee: **Denki Kagaku Kogyo Kabushiki Kaisha**, Tokyo, Japan

[21] Appl. No.: **936,773**

[22] Filed: **Aug. 25, 1978**

Related U.S. Application Data

[63] Continuation of Ser. No. 781,921, Mar. 28, 1977, abandoned.

[30] **Foreign Application Priority Data**

Mar. 31, 1976 [JP] Japan 51/35471

[51] **Int. Cl.**[2] **C07G 7/02**
[52] **U.S. Cl.** **435/182**; 435/94; 435/99; 435/205; 435/227; 435/234
[58] **Field of Search** ..... 195/63, 68, DIG. 11, 195/31 F, 59

[56] **References Cited**

U.S. PATENT DOCUMENTS

Re. 29,130	2/1977	Lee et al.	195/31 F
3,705,084	12/1972	Reynolds	195/63
3,838,007	9/1974	Van Velzen	195/63 X
3,915,797	10/1975	Ishimatsu et al.	195/63 X
3,980,521	9/1976	Amotz et al.	195/63 X
4,001,264	1/1977	Garidge et al.	195/68 X

Primary Examiner—David M. Naff
Attorney, Agent, or Firm—Oblon, Fisher, Spivak, McClelland & Maier

[57] **ABSTRACT**

Immobilized enzyme compositions for industrial use are produced by reacting an enzyme and/or enzyme-containing microorganism cells with an anion-exchange high molecular substance having a quaternary pyridine ring in the molecule, and then subjecting the reaction products to molding and drying in a molding machine. A polyfunctional crosslinking agent may be added at any stage of the process. The immobilized enzyme compositions thus prepared can be packed in a reactor of an industrial scale for continuous enzyme reaction.

13 Claims, No Drawings

United States Patent [19]
Lartigau et al.
[11] **4,264,732**
[45] **Apr. 28, 1981**

[54] **ENZYMATIC COMPOSITIONS FOR ISOMERIZING GLUCOSE INTO LEVULOSE**

[75] Inventors: **Guy Lartigau**; **Albert Bouniot**; **Michel Guerineau**, all of Melle, France

[73] Assignee: **Rhone-Poulenc Industries**, Paris, France

[21] Appl. No.: **926,821**

[22] Filed: **Jul. 21, 1978**

[30] Foreign Application Priority Data

Jul. 27, 1977 [FR] France 77 23846

[51] **Int. Cl.**[3] **C12P 19/24**; C12N 11/12; C12N 11/04
[52] **U.S. Cl.** **435/94**; 435/179; 435/182; 435/813
[58] **Field of Search** ..... 195/31 F, 115, 63, 68, 195/DIG. 11, 65, 59; 435/94, 179, 182, 813

[56] **References Cited**

U.S. PATENT DOCUMENTS

3,733,205	5/1973	Shovers et al.	195/68
3,875,008	4/1975	Yoshino et al.	195/63
3,941,655	3/1976	Heady et al.	195/31 F
3,990,943	11/1976	Bouniot et al.	195/68
4,004,980	1/1977	Emery et al.	195/68

OTHER PUBLICATIONS

Hamilton et al., "Glucose Isomermase: A Case Study of Enzyme-Catalyzed Process Technology" *Immobilized Enzymes in Food 2 Microbial Processes*, Plenum Press, N.Y., Olson et al. ed. (1974) pp. 85-131.
Geyer, "Glucose Isomermase: New Possibilites for the Starch-and Food Industry", *Die Starke* vol. 26, No. 7 (1974) pp. 225-232.
Lehninger, *Biochemistry*, Worth Publishers, Inc., N.Y., (1970) pp. 149, 150.

Primary Examiner—Thomas G. Wiseman
Attorney, Agent, or Firm—Burns, Doane, Swecker & Mathis

[57] **ABSTRACT**

The invention relates to enzymatic compositions containing intra-cellular glucose-isomerase which is enclosed in structures based on cellulose ester, their preparation and their use for isomerizing glucose into levulose.

In addition to the cellulose ester and micro-organism cells, e.g. Streptomyces phaeochromogenes, these compositions contain a sparingly water-soluble magnesium compound and optionally a sparingly water-soluble cobalt compound.

These compositions make it possible to isomerize glucose into levulose in a continuous process, with the addition of either no, or a small amount of magnesium ions to the glucose syrup to be isomerized and without the addition of cobalt ions.

16 Claims, No Drawings

United States Patent [19]
Breslau
[11] **4,266,026**
[45] **May 5, 1981**

[54] **CATALYTIC PROCESS UTILIZING HOLLOW FIBER MEMBRANES**

[75] Inventor: **Barry R. Breslau**, Acton, Mass.

[73] Assignee: **Rohm and Haas Company**, Philadelphia, Pa.

[21] Appl. No.: **776,339**

[22] Filed: **Mar. 10, 1977**

Related U.S. Application Data

[63] Continuation-in-part of Ser. No. 601,959, Aug. 4, 1975, abandoned.

[51] **Int. Cl.**[3] **C07G 7/02**; B01D 13/00
[52] **U.S. Cl.** **435/99**; 435/182; 435/288; 426/41; 210/632; 210/638
[58] **Field of Search** ..... 195/63, 68, DIG. 11; 210/22, 23 F, 321 D, 321 K; 435/99, 182, 288; 426/41

[56] **References Cited**

U.S. PATENT DOCUMENTS

3,809,613	5/1974	Vieth et al.	195/68 X

OTHER PUBLICATIONS

Immobilized Enzymes, O. R. Zaborsky, CRC Press, 1973, pp. 104-115.
Dinelli, "Fibre Entrapped Enzymes", from *Process Biochemistry*, Aug. 1972, pp. 9-12.

Primary Examiner—Frank A. Spear, Jr.
Attorney, Agent, or Firm—Louis F. Kline, Jr.

[57] **ABSTRACT**

Catalysts of various types, preferably enzymes, are immobilized on hollow fiber membranes in novel way to provide a new system for performing catalytic reactions. In preferred embodiments, novel processes for catalyzing reactions utilizing hollow fiber techniques are disclosed.

9 Claims, 8 Drawing Figures

United States Patent [19]
Kaetsu et al.
[11] **4,193,845**
[45] **Mar. 18, 1980**

[54] **IMMOBILIZATION OF ENZYMES OR BACTERIAL CELLS**

[75] Inventors: **Isao Kaetsu**; **Hiroshi Watanabe**, both of Takasaki; **Tomotaro Sato**, Sagamihara; **Akihiko Ito**, Takasaki, all of Japan

[73] Assignee: **Japan Atomic Energy Research Institute**, Tokyo, Japan

[21] Appl. No.: **688,081**

[22] Filed: **May 19, 1976**

Related U.S. Application Data

[63] Continuation-in-part of Ser. No. 523,162, Nov. 12, 1974, abandoned.

[30] **Foreign Application Priority Data**

Nov. 15, 1973 [JP] Japan 48-127763

[51] **Int. Cl.**[2] **C07G 7/02**; C12K 1/00
[52] **U.S. Cl.** **435/182**; 260/8; 435/173
[58] **Field of Search** ..... 195/59, 63, 68, DIG. 4; 260/8; 204/159.16, 159.22

[56] **References Cited**

U.S. PATENT DOCUMENTS

3,859,169	1/1975	O'Driscoll et al.	195/63
3,860,490	1/1975	Guttag	195/59 X
3,871,964	3/1975	Huper et al.	195/63
3,933,587	1/1976	Maeda et al.	195/68
3,962,038	6/1976	Kamashima et al.	195/68

Primary Examiner—David M. Naff
Attorney, Agent, or Firm—Browdy and Neimark

[57] **ABSTRACT**

This invention relates to polymer composition having fixed bacterial cells and/or fixed enzyme, in which the enzyme or cells are dispersed within the polymer. The polymer composition is prepared by mixing an aqueous enzyme solution or an aqueous dispersion of bacterial cells with one or more monomers selected from the group consisting of hydroxyethyl methacrylate, hydroxyethyl acrylate, hydroxypropyl methacrylate and hydroxypropyl acrylate and then polymerizing or copolymerizing the monomer(s) contained in the mixture by means of ionizing radiation at a temperature at which water in the mixture is frozen.

9 Claims, No Drawings

United States Patent [19]

Sakimae et al.

[11] **4,276,381**

[45] **Jun. 30, 1981**

[54] **PREPARATION OF IMMOBILIZED ENZYMES OF MICROORGANISMS**

[75] Inventors: **Akihiro Sakimae**, Otake; **Hisao Onishi**, Hiroshima, both of Japan

[73] Assignee: **Mitsubishi Rayon Company, Ltd.**, Tokyo, Japan

[21] Appl. No.: **60,907**

[22] Filed: **Jul. 26, 1979**

[30] **Foreign Application Priority Data**

Apr. 9, 1979 [JP] Japan 54/42725

[51] **Int. Cl.**[3] **C12N 11/12**; C12N 11/04

[52] **U.S. Cl.** **435/179**; 435/180; 435/182

[58] **Field of Search** 435/174, 177, 180, 179, 435/182

[56] **References Cited**

U.S. PATENT DOCUMENTS

3,860,490 1/1975 Guttag 435/182

3,962,038 6/1976 Kawashima et al. ..... 435/182 X

FOREIGN PATENT DOCUMENTS

953414 3/1964 United Kingdom 435/182

Primary Examiner—David M. Naff

Attorney, Agent, or Firm—Oblon, Fisher, Spivak, McClelland & Maier

[57] **ABSTRACT**

Immobilized enzymes or microorganisms are prepared by dispersing lumps of ice containing an enzyme or microorganism in an organic solvent having a water-insoluble high-molecular weight substance dissolved therein, and then removing the organic solvent to entrap the ice lumps in the water-insoluble high-molecular weight substance. Deactivation of the enzyme or microorganism by the organic solvent is prevented by the enzyme or microorganism being entrapped in the lumps of ice.

8 Claims, No Drawings

United States Patent [19]

Enokizono et al.

[11] **4,252,899**

[45] *** Feb. 24, 1981**

[54] **PROCESS FOR IMMOBILIZING GLUCOSE ISOMERASE AND A METHOD OF CONTINUOUS ISOMERIZATION OF GLUCOSE**

[75] Inventors: **Shigehiro Enokizono**, Ageo; **Soichiro Ushiro**, Kokubunji, both of Japan

[73] Assignee: **CPC International Inc.**, Englewood Cliff, N.J.

[*] Notice: The portion of the term of this patent subsequent to Mar. 13, 1996, has been disclaimed.

[21] Appl. No.: **3,162**

[22] Filed: **Jan. 15, 1979**

Related U.S. Application Data

[63] Continuation of Ser. No. 780,374, Mar. 23, 1977, Pat. No. 4,144,127.

[30] **Foreign Application Priority Data**

Apr. 2, 1976 [JP] Japan 51-36179

[51] **Int. Cl.**[3] **C12P 19/24**

[52] **U.S. Cl.** **435/94**; 435/176; 435/813

[58] **Field of Search** 435/94, 176, 813

[56] **References Cited**

U.S. PATENT DOCUMENTS

3,669,841 6/1972 Miller 435/176

3,796,634 3/1974 Haynes et al. 435/180

3,930,951 1/1976 Messing 435/176

3,933,587 1/1976 Maeda et al. 435/173

3,935,068 1/1976 Nystrom 435/94

3,956,065 5/1976 Idaszak et al. 435/94

Primary Examiner—Thomas G. Wiseman

[57] **ABSTRACT**

Glucose isomerase is immobilized in an active form by adsorbing the glucose isomerase onto a colloidal silica. The enzyme is contacted with the colloidal silica and the resulting composite solidified by freezing. Optionally, the composite may be gelatinized prior to freezing. The composite is then used for the isomerization of glucose to fructose.

3 Claims, No Drawings

United States Patent [19]

Hulsmann et al.

[11] **4,188,263**

[45] **Feb. 12, 1980**

[54] **CARRIER-BOUND ACYLASES**

[75] Inventors: **Hans-Leo Hulsmann**, Wetter, Fed. Rep. of Germany; **Gustav Renckhoff, deceased**, late of Witten, Fed. Rep. of Germany, by Brunhilde Renckhoff nee Grave, heir and legal representative

[73] Assignee: **Dynamit Nobel Aktiengesellschaft**, Troisdorf, Fed. Rep. of Germany

[21] Appl. No.: **872,277**

[22] Filed: **Jan. 25, 1978**

[30] **Foreign Application Priority Data**

Jan. 29, 1977 [DE] Fed. Rep. of Germany 2703703

[51] **Int. Cl.**[2] **C07G 7/02**; C12D 13/06

[52] **U.S. Cl.** **439/179**

[58] **Field of Search** ..... 195/63, 68, DIG. 11, 195/36 P, 29; 536/32

[56] **References Cited**

U.S. PATENT DOCUMENTS

3,876,501 4/1975 Hanushemsky ..... 195/63 X

3,883,394 5/1975 Savidge et al. 195/63

3,887,432 6/1975 Camthorne ..... 195/36 P

4,119,494 10/1978 Durand et al. 195/68

Primary Examiner—David M. Naff

Attorney, Agent, or Firm—Sprung, Felfe, Horn, Lynch & Kramer

[57] **ABSTRACT**

Immobilizates of acylases (N-acyl-L-amino acid amidohydrolases) are prepared by binding the acylase to a carrier by reacting the acylase with a chemically bound reactive group of a cellulose derivative. The cellulose derivative is prepared by reaction of a hydroxyl group of cellulose with a reagent containing at least two reactive functional groups to provide the reactive group. The reaction of a hydroxyl group of cellulose and reagent is performed by contacting the reagent with cellulose dissolved in dimethyisulfoxide containing polyhydroxymethylene for reaction of the cellulose and reagent to form said derivative.

2 Claims, No Drawings

United States Patent [19]

Chibata et al.

[11] **4,138,292**

[45] **Feb. 6, 1979**

[54] **IMMOBILIZED CATALYTICALLY ACTIVE SUBSTANCE AND METHOD OF PREPARING THE SAME**

[75] Inventors: **Ichiro Chibata**, Suita; **Tetsuya Tosa**, Kyoto; **Isao Takata**, Takatsuki, all of Japan

[73] Assignee: **Tanabe Seiyaku Co., Ltd.**, Osaka, Japan

[21] Appl. No.: **807,259**

[22] Filed: **Jun. 16, 1977**

[30] **Foreign Application Priority Data**

Jul. 2, 1976 [JP] Japan 51-79346

[51] **Int. Cl.**[2] **C07G 7/02**; C12B 1/00

[52] **U.S. Cl.** ..... **195/59**; 195/53; 195/60; 195/63; 195/68; 195/31 F

[58] Field of Search ..... 195/63, 68, DIG. 11, 195/52–60

[56] **References Cited**

U.S. PATENT DOCUMENTS

3,223,593 12/1965 Aldrich et al. 195/63

3,278,392 10/1966 Patchornik 195/63

4,003,792 1/1977 Mill et al. 195/63

OTHER PUBLICATIONS

Annual Review of Biochemistry, vol. 35, Part II, pp. 873–904 (1966).

Biochemistry, vol. 31, No. 4, pp. 337–345 (Mar.–Apr. 1966) (A Translation of Biokhimiya).

Enzymologia, vol. 39, pp. 12–14 (1970).

Applied Microbiology, May 1974, pp. 878–885, vol. 27, No. 5.

Primary Examiner—Lionel M. Shapiro

Attorney, Agent, or Firm—Bierman & Bierman

[57] **ABSTRACT**

An enzyme or microorganism is entrapped within the gel matrix of a sulfated polysaccharide (said polysaccharide containing more than 10 w/w% of a sulfate moiety in its molecule) in the presence of ammonium ion, a metal ion, a water-soluble amine or a water-miscible organic solvent. The immobilized enzyme or microorganism thus obtained shows a high level of catalytic activity for a long period of time and can be used for continuous enzymatic reactions with substrates.

64 Claims, No Drawings

United States Patent [19]
Mirabel et al.
[11] **4,258,133**
[45] **Mar. 24, 1981**

[54] **ENZYME-SUPPORT COMPLEXES**

[75] Inventors: **Bernard Mirabel**, Orly; **Francois Meiller**, Palaiseau, both of France

[73] Assignee: **Rhone-Poulenc Industries**, Paris, France

[21] Appl. No.: **12,394**

[22] Filed: **Feb. 15, 1979**

[30] **Foreign Application Priority Data**

Feb. 16, 1978 [FR] France 78 04354
Jan. 23, 1979 [FR] France 79 01580

[51] **Int. Cl.**[3] **C12N 11/14**
[52] **U.S. Cl.** **435/176**; 435/181
[58] **Field of Search** 435/176, 181

[56] **References Cited**

U.S. PATENT DOCUMENTS

3,519,538 7/1970 Messing et al. 435/176
3,669,841 6/1972 Miller 435/176
4,034,139 7/1977 Mazarguil et al. ..... 435/176 X
4,119,494 10/1978 Durand et al. 435/176

Primary Examiner—David M. Naff

[57] **ABSTRACT**

Enzyme-support complexes in which the enzymes are bound by covalent bonding to at least one reactive function of organic groups grafted to mineral supports by at least one ester bond. The complexes are obtained by reacting an insoluble inorganic support having hydroxyl groups with a compound formed of an organic group having at least one alcohol or phenol function and at least one reactive function, to which the enzyme is then bonded.

12 Claims, No Drawings

United States Patent [19]
Rohrbach et al.
[11] **4,250,260**
[45] **Feb. 10, 1981**

[54] **REGENERATION OF AN IMMOBILIZED ENZYME SYSTEM**

[75] Inventors: **Ronald P. Rohrbach**, Forest Lake, Ill.; **Joseph Levy**, Deerfield Beach, Fla.

[73] Assignee: **UOP Inc.**, Des Plaines, Ill.

[21] Appl. No.: **68,803**

[22] Filed: **Aug. 22, 1979**

[51] **Int. Cl.**[3] **C12M 11/14**; C12M 11/08; C12M 11/06; B01J 31/40
[52] **U.S. Cl.** **435/176**; 252/413; 435/180; 435/181
[58] **Field of Search** 252/413, 414, 430, 428; 435/180, 181, 182, 174–177

[56] **References Cited**

U.S. PATENT DOCUMENTS

3,761,357 9/1973 Epton et al. 435/181
3,836,433 9/1974 Wirth et al. 435/181
4,113,568 9/1978 Fujita et al. 435/180
4,141,857 2/1979 Levy et al. 252/430

Primary Examiner—P. E. Konopka
Attorney, Agent, or Firm—James R. Hoatson, Jr.; Raymond H. Nelson; William H. Page, II

[57] **ABSTRACT**

A method for regenerating an immobilized enzyme system comprises treating the system with an acid, removing excess acid, treating the system with a bifunctional organic reagent which furnishes a pendant group, removing excess of said bifunctional reagent, and immobilizing fresh, active enzyme.

7 Claims, 1 Drawing Figure

United States Patent [19]
Muramatsu et al.
[11] **4,260,680**
[45] **Apr. 7, 1981**

[54] **METHOD AND APPARATUS FOR THE MEASUREMENT OF GLUCOSE CONTENT**

[75] Inventors: **Kozo Muramatsu**, Machida; **Kuniko Samizo**, Tachikawa, both of Japan

[73] Assignee: **Mitsubishi Chemical Industries, Ltd.**, Tokyo, Japan

[21] Appl. No.: **949,130**

[22] Filed: **Oct. 6, 1978**

[30] **Foreign Application Priority Data**

Oct. 22, 1977 [JP] Japan 52/127102

[51] **Int. Cl.**[3] **C12Q 1/54**; C12Q 1/26; C12M 1/34
[52] **U.S. Cl.** ..... **435/14**; 435/25; 435/180; 435/181; 435/291; 204/1 T; 204/195 B
[58] **Field of Search** ..... 435/14, 174, 288, 291; 195/103.5 R, 103.5 C, 127; 204/195 B, 1 T

[56] **References Cited**

U.S. PATENT DOCUMENTS

3,421,982 1/1969 Schultz et al. ..... 435/14 X
3,902,970 9/1975 Levin ..... 435/14 X
3,937,615 2/1976 Clack et al. ..... 435/14 X
4,033,830 7/1977 Fletcher ..... 204/1 T
4,059,406 11/1977 Fleet ..... 204/1 T X
4,085,009 4/1978 Pace ..... 204/195 B

OTHER PUBLICATIONS

Ramaswamy et al., *Chemical Abstracts*, 80:105563r, (1974).
Bloxam, *Chemical Abstracts*, 81:60227m, (1974).
Ramaswamy et al. *Indian J. Biochem. Biophys.*, 10(2), 96–98, (1973).
Bloxam, *Biochem. Med.*, 10(1), 61–69 (1974).

Primary Examiner—Alvin E. Tanenholtz
Attorney, Agent, or Firm—Oblon, Fisher, Spivak, McClelland & Maier

[57] **ABSTRACT**

A method and apparatus for measuring the glucose content in a liquid sample by passing the sample consecutively through a column of at least one ion exchange resin and a column of immobilized glucose oxidase and then determining the amount of hydrogen peroxide produced by contacting the sample with glucose oxidase.

11 Claims, 7 Drawing Figures

United States Patent [19]
von Stetten et al.
[11] **4,273,865**
[45] **Jun. 16, 1981**

[54] **INSOLUBILIZED BIOCHEMICAL MATERIALS**

[75] Inventors: **Otto von Stetten**, Rodgau; **Helmut Schmidt**, Wuerzburg, both of Fed. Rep. of Germany

[73] Assignee: **Byk-Mallinckrodt Chemische Produkte GmbH**, Dietzenbach-Steinberg, Fed. Rep. of Germany

[21] Appl. No.: **972,846**

[22] Filed: **Dec. 26, 1978**

[30] **Foreign Application Priority Data**

Dec. 28, 1977 [DE] Fed. Rep. of Germany 2758507

[51] **Int. Cl.**[3] **G01N 33/54**; C12N 11/14
[52] **U.S. Cl.** ..... **435/7**; 260/112 R; 435/28; 435/176; 435/181
[58] **Field of Search** ..... 435/7, 28, 174, 176, 435/177, 181; 414/12; 260/112 R

[56] **References Cited**

U.S. PATENT DOCUMENTS

3,519,538 7/1970 Messing et al. 435/176
3,715,278 2/1973 Miller 435/176

Primary Examiner—David M. Naff
Attorney, Agent, or Firm—Roy J. Klostermann

[57] **ABSTRACT**

Stabilized, insolubilized biochemical materials are prepared by covalently bonding a biochemical material such as an antigen, antibody, hormone, or enzyme to a silicic acid heteropolycondensate layer which is applied to a mechanically stable support. The insolubilized biochemical materials are useful as separating agents or adsorbents in radio-immuno assays or affinity chromatography.

27 Claims, No Drawings

United States Patent [19]
Glass et al.
[11] **4,259,445**
[45] **Mar. 31, 1981**

[54] **IMMOBILIZED ENZYME CATALYST**

[75] Inventors: **Richard W. Glass**, Bryan, Tex.; **Joseph Glogowski**, Pawtuckett, R.I.

[73] Assignee: **CPC International**, Englewood Cliffs, N.J.

[21] Appl. No.: **44,729**

[22] Filed: **Jun. 1, 1979**

[51] **Int. Cl.**[1] **C12M 11/10**; C12M 11/04; B01J 31/02

[52] **U.S. Cl.** ..... **435/178**; 252/316; 252/426; 252/428; 252/429 R; 426/52; 435/182

[58] **Field of Search** ..... 252/426, 428, 429 R, 252/430, 316; 435/174–183; 426/50, 52

[56] **References Cited**

U.S. PATENT DOCUMENTS

3,063,912	11/1962	Otaka et al.	435/183
3,691,090	9/1972	Kitajima	435/182
4,102,745	7/1978	Thompson et al.	435/175

Primary Examiner—P. E. Konopka

[57] **ABSTRACT**

An enzyme catalyst is described. The catalyst comprises subcellular particulates of vegetable material containing an enzyme system composed of different carbohydrate transforming enzymes. These particulates are encapsulated within a matrix formed by coagulating an organic entrapping agent with polyvalent cations. The matrix is permeable to permit access of carbohydrate substrate to enzyme and acts to immobilize the enzyme system and preserve the activity of the encapsulated enzymes.

18 Claims, No Drawings

United States Patent [19]
McDonald et al.
[11] **4,254,218**
[45] **Mar. 3, 1981**

[54] **DETECTING NEISSERIA VIA IMMOBILIZED ANTIBODY-ENZYME COMPLEX**

[75] Inventors: **Hugh C. McDonald; Gerald Odstrchel**, both of Horseheads; **Milton M. Takeguchi**, Big Flats, all of N.Y.

[73] Assignee: **Corning Glass Works**, Corning, N.Y.

[21] Appl. No.: **14,294**

[22] Filed: **Feb. 23, 1979**

[51] **Int. Cl.**[3] **C12Q 1/66**; C12N 11/14

[52] **U.S. Cl.** **435/7**; 435/176; 435/810

[58] **Field of Search** ..... 435/4, 7, 26, 810, 176; 23/230 B; 424/12

[56] **References Cited**

U.S. PATENT DOCUMENTS

4,016,043	4/1977	Schuurs et al.	435/7
4,029,756	6/1977	Gaafar	435/7
4,071,409	1/1978	Messing et al.	435/176
4,140,581	2/1979	Weetal	435/7
4,166,765	9/1979	Weetall	435/26

Primary Examiner—Thomas G. Wiseman
Attorney, Agent, or Firm—William E. Maycock; Clinton S. Janes, Jr.

[57] **ABSTRACT**

A method for detecting the presence of Neisseria bacteria in a fluid sample which comprises bringing immobilized antibody specific for the enzyme 1,2-propanediol dehydrogenase which is released from such bacteria upon lysis thereof, into contact with a lysed sample, isolating the immobilized antibody or resulting immobilized antibody-enzyme complex or mixture thereof, and then testing the isolated material for enzymatic activity.

18 Claims, No Drawings

United States Patent [19]
Sutthoff et al.
[11] **4,110,164**
[45] **Aug. 29, 1978**

[54] **AGGLOMERATED FIBROUS CELLULOSE**

[75] Inventors: **Robert F. Sutthoff; Robert V. MacAllister; Khaja Khaleeluddin**, all of Clinton, Iowa

[73] Assignee: **Standard Brands Incorporated**, New York, N.Y.

[21] Appl. No.: **788,728**

[22] Filed: **Apr. 19, 1977**

[51] **Int. Cl.**[2] **C07G 7/02**

[52] **U.S. Cl.** ..... **195/63**; 195/68; 260/17 R; 260/17.4 CL; 195/31 F

[58] **Field of Search** ..... 260/17.4, 17 R, 17.4 CL; 195/31 F, 63, 68, DIG. 11

[56] **References Cited**

U.S. PATENT DOCUMENTS

3,708,397	1/1973	Sipos	195/31 R
3,788,945	1/1974	Thompson et al.	195/31 F
3,823,133	7/1974	Hurst et al.	260/231 A
3,838,007	9/1974	van Velzen	195/31 R
3,909,354	9/1975	Thompson et al.	195/31 F
3,947,325	3/1976	Dinelli et al.	195/68
3,956,065	5/1976	Idaszak et al.	195/31 F
4,029,546	6/1977	Brouillard	195/31 R
4,033,817	7/1977	Gregor	195/2

FOREIGN PATENT DOCUMENTS

910,202 11/1962 United Kingdom.

OTHER PUBLICATIONS

Peterson et al., J.A.C.S., vol. 78, pp. 751–755 (1956).
Guthrie et al., Industrial and Engineering Chemistry, vol. 52, pp. 935–937 (1960).
Tsumura et al., Nippon Shokuhim Kogyo Gakkaishi, vol. 14, No. 12, pp. 89–92, (1967).
Peska et al., Die Angewandte Makromolekulare Chemie, vol. 53, pp. 73–80, (1976).

Primary Examiner—Lionel M. Shapiro

[57] **ABSTRACT**

An agglomerated fibrous ion exchange cellulose composite wherein the cellulose is embedded in a hydrophobic polymer and relatively large portions of the cellulose are free to adsorb charged macro-molecules.

18 Claims, No Drawings

United States Patent [19]
Hartmeier
[11] **4,182,655**
[45] **Jan. 8, 1980**

[54] **ENZYME IMMOBILIZATION WITH A PROTEIN CARRIER**

[75] Inventor: **Winfried Hartmeier**, Bingen, Fed. Rep. of Germany

[73] Assignee: **Boehringer Ingelheim GmbH**, Ingelheim am Rhein, Fed. Rep. of Germany

[21] Appl. No.: **823,007**

[22] Filed: **Aug. 8, 1977**

[30] **Foreign Application Priority Data**

Aug. 12, 1976 [DE] Fed. Rep. of Germany 2636206

[51] **Int. Cl.**[2] **C07G 7/00**; C07G 7/02

[52] **U.S. Cl.** ..... **435/181**; 260/112 R; 260/117

[58] **Field of Search** ..... 195/63, 68, DIG. 11; 260/112 R, 117

[56] **References Cited**

U.S. PATENT DOCUMENTS

3,705,084	12/1972	Reynolds	195/63
3,758,396	9/1973	Vieth et al.	195/63 X
3,796,634	3/1974	Haynes et al.	195/63
3,838,007	9/1974	Van Velzen	195/63 X
3,841,971	10/1974	Messing	195/63

OTHER PUBLICATIONS

Griffith et al., A New Method for Coating Fermentation Tower Packing so as to Facilitate Microorganism Attachment, Developments in Industrial Microbiology, vol. 17, 4/76, (pp. 241–246).

Primary Examiner—David M. Naff
Attorney, Agent, or Firm—Hammond & Littell

[57] **ABSTRACT**

Enzymes are immobilized by mixing an enzyme solution with a dry insoluble crosslinked protein having a water-absorption capacity of 2 to 8 times its dry weight, allowing the protein to swell and suck up the total amount of enzyme solution and mixing the enzyme-containing swollen protein with a solution of glutardialdehyde to bond the enzymes to the protein. Enzymes immobilized by this method are especially well suited for repeated and continuous use.

8 Claims, 1 Drawing Figure

United States Patent [19]
Krämer et al.
[11] **4,247,643**
[45] **Jan. 27, 1981**

[54] **PREPARATION OF STABILIZED CARRIER-BOUND PROTEINS**

[75] Inventors: **Dieter Krämer**, Mainz; **Klaus Sauber**, Bad Soden, both of Fed. Rep. of Germany

[73] Assignee: **Röhm GmbH Chemische Fabrik**, Darmstadt, Fed. Rep. of Germany

[21] Appl. No.: **924,346**

[22] Filed: **Jul. 13, 1978**

[30] **Foreign Application Priority Data**

Jul. 16, 1977 [DE] Fed. Rep. of Germany 2732301

[51] **Int. Cl.**[3] **C12N 11/10**; C12N 11/08; C12N 9/96

[52] **U.S. Cl.** ..... **435/178**; 435/44; 435/180; 435/188; 435/230; 260/112 R

[58] **Field of Search** ..... 195/63, 68, DIG. 11; 435/177, 178, 180, 181, 188, 44, 230; 260/112 R

[56] **References Cited**

U.S. PATENT DOCUMENTS

3,645,852	2/1972	Axon et al.	195/68
3,853,708	12/1974	Porath et al.	195/68
4,008,126	2/1977	Keyes	195/68 X

OTHER PUBLICATIONS

Cleland, W. W. Dithiothreitol, A New Protective Reagent for SH Groups, Biochemistry, vol. 3, No. 4 1964, pp. (480–482).

Konigsberg, W. Reduction of Disulfide Bonds in Proteins with Dithiothreitol Methods in Enzymology, vol. XXXV, 1972 (pp. 185–188).

Primary Examiner—David M. Naff
Attorney, Agent, or Firm—Oblon, Fisher, Spivak, McClelland & Maier

[57] **ABSTRACT**

Stabilized carrier-bound protein is prepared by reacting a protein in aqueous solution with a mercapto group free, water insoluble carrier which contains binding groups which are reactive with the said protein and reacting the resultant protein-containing mercapto group-free carrier with hydrogen sulfide or with a compound having a molecular weight of less than 5000, and which contains at least two mercapto groups, or at least one mercapto group and at least one hydroxy- group or primary or secondary amino group.

14 Claims, No Drawings

United States Patent [19]
Ehrenthal et al.
[11] **4,208,482**
[45] **Jun. 17, 1980**

[54] **IMMOBILIZATION OF GLUCOSE ISOMERASE**

[75] Inventors: **Irving Ehrenthal**, University City; **Keith E. Miner**, Mehlville, both of Mo.

[73] Assignee: **Anheuser-Busch, Incorporated**, St. Louis, Mo.

[21] Appl. No.: 679,769

[22] Filed: Apr. 23, 1976

[51] Int. Cl.[2] C07G 7/02; C12D 13/04

[52] U.S. Cl. 435/178; 435/94

[58] Field of Search ..... 195/31, 31 F, 63, 68, 195/DIG. 11, 66 R

[56] **References Cited**

U.S. PATENT DOCUMENTS

3,779,869	12/1973	Zienty	195/68
3,834,988	9/1974	Shieh et al.	195/66 R
3,843,442	10/1974	Moskowitz	195/68 X
3,956,065	5/1976	Idaszak et al.	195/31 F

OTHER PUBLICATIONS

Toda et al., Sucrose Inversion by Immobilized Yeast Cells in a Complete Mixing Reactor Biotechnology and Bioengineering, vol. XVII 1975, (pp. 481–497).

Strandberg et al., Free and Immobilized Glucose Isomerase from *Streptomyces phaeochromogenes*, Applied Microbiology, vol. 21, No. 4, 1971 (pp. 588–593).

Nilsson et al., The Use of Bead Polymerization of Acrylic Monomers for Immobilization of Enzymes Biochimica et. Biophysics Actz, vol. 268, 1972 (pp. 253–256).

Primary Examiner—David M. Naff
Attorney, Agent, or Firm—Gravely, Lieder & Woodruff

[57] **ABSTRACT**

Immobilized glucose isomerase is prepared by mixing 0.5 to 1.5 parts by weight whole microbial cells containing glucose isomerase with one part by weight agar, combining the resultant mixture with an organic solvent, recovering discrete particles of agar gel with the whole microbial cells entrapped therein and drying the agar gel particles. The immobilized glucose isomerase has long half life stability when used in a column in a continuous process to convert glucose to fructose.

8 Claims, No Drawings

United States Patent [19]
Hirohara et al.
[11] **4,247,642**
[45] **Jan. 27, 1981**

[54] **ENZYME IMMOBILIZATION WITH PULLULAN GEL**

[75] Inventors: **Hideo Hirohara**; **Shigeyasu Nabeshima**; **Masanori Fujimoto**, all of Ibaraki; **Tsuneyuki Nagase**, Takatsuki, all of Japan

[73] Assignee: **Sumitomo Chemical Company, Limited**, Osaka, Japan

[21] Appl. No.: **878,572**

[22] Filed: **Feb. 16, 1978**

[30] **Foreign Application Priority Data**

Feb. 17, 1977 [JP] Japan 52-16835
Aug. 26, 1977 [JP] Japan 52-102999

[51] **Int. Cl.**[3] **C12N 11/10**

[52] **U.S. Cl.** **435/178**; 435/180; 435/181

[58] **Field of Search** ..... 195/63, 68, DIG. 11; 536/52, 1; 435/174, 177, 178, 181

[56] **References Cited**

U.S. PATENT DOCUMENTS

3,645,852	2/1972	Axen et al.	195/63 X
3,905,954	9/1975	Jones et al.	195/63 X
4,090,022	5/1978	Tsao et al.	195/63 X
4,152,170	5/1979	Nagase et al.	536/1 X

Primary Examiner—David M. Naff
Attorney, Agent, or Firm—Stevens, Davis, Miller & Mosher

[57] **ABSTRACT**

Enzymes are immobilized by a process wherein the carrier used for immobilizing is a hydrophilic pullulan gel having a three-dimensionally reticulated structure obtained by the reaction between pullulan and a bifunctional compound capable of forming an ether linkage with the hydroxyl group contained in the glucose unit of pullulan, or an ionic pullulan gel obtained by the reaction between said hydrophilic pullulan gel and a compound having at one end an ionizable group and at the other end a functional group capable of forming an ether linkage with the hydroxyl group in the pullulan gel in the presence of an alkaline coumpound. Immobilized enzymes prepared according to this process have a high activity and good retention of the activity.

25 Claims, No Drawings

United States Patent [19]
Fujita et al.
[11] **4,205,127**
[45] *** May 27, 1980**

[54] **PROCESS FOR THE RENEWAL OF AN INSOLUBILIZED GLUCOSE ISOMERASE**

[75] Inventors: **Yoshimasa Fujita**, Tokyo; **Akiyoshi Matsumoto**, Hino; **Isao Miyachi**; **Nobuo Imai**, both of Higashiyamato; **Isao Kawakami**, Machida; **Tadashi Hishida**, Tokyo; **Akira Kamata**, Yokohama, all of Japan

[73] Assignees: **Mitsubishi Chemical Industries, Limited**; **Seikagaku Kogyo Company, Ltd.**, both of Tokyo, Japan

[*] Notice: The portion of the term of this patent subsequent to Sep. 12, 1995, has been disclaimed.

[21] Appl. No.: **917,256**

[22] Filed: **Jun. 20, 1978**

Related U.S. Application Data

[63] Continuation of Ser. No. 780,843, Mar. 24, 1977, Pat. No. 4,113,568.

[51] **Int. Cl.**[2] **C12N 11/12**; C12N 11/08; C12N 11/10

[52] **U.S. Cl.** **435/179**; 435/178; 435/180; 435/234; 435/815

[58] **Field of Search** ..... 195/68, 66 R, 31 F

[56] **References Cited**

U.S. PATENT DOCUMENTS

3,708,397	1/1973	Sipos	195/31 F
4,002,576	1/1977	Gregory et al.	195/31 F X
4,113,568	9/1978	Fujita et al.	195/68

OTHER PUBLICATIONS

Dorfner, Ion Exchangers Properties and Applications, pp. 21, 23 (1972), Ann Arbor Science Publishers, Inc.

Primary Examiner—Lionel M. Shapiro
Attorney, Agent, or Firm—Oblon, Fisher, Spivak, McClelland & Maier

[57] **ABSTRACT**

There is disclosed a process for the renewal of a deactivated insolubilized glucose isomerase which comprises subjecting an insolubilized glucose isomerase adsorbed onto an anion exchange resin, which has been used for isomerization of glucose into fructose to decrease its activity, to treatments by an aqueous mineral acid solution in combination with an aqueous alkaline solution, an aqueous electrolytic salt solution, an aqueous mineral acid or a mixture thereof to release adsorbed materials from the resin which is converted into a salt type and adsorbing fresh glucose isomerase to the regenerated resin to recover the activity of the insolubilized glucose isomerase.

15 Claims, No Drawings

United States Patent [19]
Hildebrand et al.
[11] 4,195,128
[45] Mar. 25, 1980

[54] POLYMERIC CARRIER BOUND LIGANDS

[75] Inventors: Dietrich Hildebrand, Odenthal, Fed. Rep. of Germany; Thomas Gribnau, Weezenhof, Netherlands

[73] Assignee: Bayer Aktiengesellschaft, Leverkusen, Fed. Rep. of Germany

[21] Appl. No.: 948,186

[22] Filed: Oct. 2, 1978

Related U.S. Application Data

[62] Division of Ser. No. 792,297, Apr. 29, 1977, Pat. No. 4,144,128.

[30] Foreign Application Priority Data

May 3, 1976 [DE] Fed. Rep. of Germany 2619451

[51] Int. Cl.² C07G 7/02

[52] U.S. Cl. ..... 435/178; 260/112.7; 260/564 R; 435/179; 435/180; 435/181; 536/1; 536/51; 536/56; 536/30; 536/112; 525/375

[58] Field of Search ..... 195/63, 68, DIG. 11; 526/46, 50; 260/112.7, 564; 536/1, 51, 30, 56, 112

[56] References Cited

U.S. PATENT DOCUMENTS

4,007,089 2/1977 Smith 195/68
4,069,105 1/1978 Singh 195/63

OTHER PUBLICATIONS

Stark, Editor, Biochemical Aspects of Reaction on Solid Supports, 1971, pp. 14–23, 86–93.

Primary Examiner—Lionel M. Shapiro
Attorney, Agent, or Firm—Sprung, Felfe, Horn, Lynch & Kramer

[57] ABSTRACT

A process for bonding a ligand to a carrier through the use of a pyrimidine derivative of the formula:

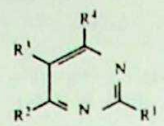

in which R^1, R^2, R^3 and R^4 are each independently hydrogen, hydroxyl, halogen, lower alkyl, lower alkoxy, loweralkylthio, loweracylamino, nitro, cyano, carboxamido, loweralkylsulphonyl, loweralkoxycarbonyl, phenyl, trifluoromethyl or chloromethyl, the ligand or the carrier containing at least one functional group that reacts with the pyramidine derivative.

6 Claims, No Drawings

United States Patent [19]
Chibata et al.
[11] 4,224,411
[45] Sep. 23, 1980

[54] IMMOBILIZED AMINOACYLASE

[75] Inventors: Ichiro Chibata, Suita; Tetsuya Tosa, Kyoto; Takao Mori, Takatsuki; Taizo Watanabe, Nagaokakyo; Motoki Fujimura, Ikeda, all of Japan

[73] Assignee: Tanabe Seiyaku Co., Ltd., Osaka, Japan

[21] Appl. No.: 911,995

[22] Filed: Jun. 2, 1978

[30] Foreign Application Priority Data

Jul. 12, 1977 [JP] Japan 52/83680

[51] Int. Cl.³ C12N 11/02; C12N 11/10; C12P 13/04

[52] U.S. Cl. 435/177; 435/106; 435/178

[58] Field of Search ..... 195/63, 68, DIG. 11, 195/29; 435/188, 180, 177, 178, 179, 174, 227, 106

[56] References Cited

U.S. PATENT DOCUMENTS

3,386,888 6/1968 Chibata et al. ..... 195/63 X
4,008,124 2/1977 Fujita et al. ..... 195/68 X
4,090,919 5/1978 Chibata et al. 195/63

FOREIGN PATENT DOCUMENTS

1061717 3/1967 United Kingdom 435/227

OTHER PUBLICATIONS

Birnbaum, S. M., Aminoacylase, Methods In Enzymology, vol. II, Academic Press, Inc., New York, 1955, (pp. 115–119).

Primary Examiner—David M. Naff
Attorney, Agent, or Firm—Bierman & Bierman

[57] ABSTRACT

An immobilized aminoacylase preparation is obtained by adsorbing tannin on a water-insoluble, hydrophilic carrier to give a water-insoluble tannin preparation, adsorbing aminoacylase on the tannin preparation to give a water-insoluble tannin-aminoacylase preparation, and then binding ferric or ferrous ion thereto. The immobilized preparation obtained above sustains a high rate of enzymatic activity for a long period of time when used in an enzymatic reaction thereof with N-acyl-DL-amino acids.

2 Claims, No Drawings

United States Patent [19]
Biebricher et al.
[11] 4,177,038
[45] Dec. 4, 1979

[54] METHOD FOR THE PRODUCTION OF A VEHICLE SUBSTANCE WHICH IS CAPABLE OF COVALENT BONDING WITH BIOLOGICALLY ACTIVE MATTER

[75] Inventors: Christof Biebricher, Adelebsen; Rüdiger Luce, Herzberg, both of Fed. Rep. of Germany

[73] Assignee: Max-Planck-Gesellschaft zur Förderung der Wissenschafen e.V., Göttingen, Fed. Rep. of Germany

[21] Appl. No.: 797,677

[22] Filed: May 17, 1977

[30] Foreign Application Priority Data

May 18, 1976 [DE] Fed. Rep. of Germany 2621974

[51] Int. Cl.² D06M 13/42; C08B 15/06; C08B 37/02

[52] U.S. Cl. 8/192; 435/179; 435/178; 435/181; 525/123; 536/51; 8/DIG. 11

[58] Field of Search ..... 195/63, 68; 8/192, DIG. 11; 526/23, 49; 536/51, 1

[56] References Cited

U.S. PATENT DOCUMENTS

3,574,062 4/1971 Sato 195/63
3,672,955 6/1972 Stanley 195/68
3,705,084 12/1972 Reynolds 195/63
3,905,923 9/1975 Klug 195/DIG. 11
3,929,574 12/1975 Wood et al. ..... 195/63 X
3,947,352 3/1976 Cuatrecasas et al. 195/63
3,950,222 4/1976 Takasaki 195/68
4,063,017 12/1977 Tsao et al. ..... 195/63 X

Primary Examiner—Lionel M. Shapiro
Attorney, Agent, or Firm—Browdy and Neimark

[57] ABSTRACT

Process for preparing a vehicle substance capable of covalent bonding with biological material, especially enzymes, by reacting a matrix containing —OH or NH_2 groups with an organic diisocyanate under anhydrous conditions. The distance between the matrix and biological material may be extended by a stepwise reaction of the matrix with an organic diisocyanate, and organic spacer containing two or more —OH and/or NH_2 groups and again with an organic diisocyanate. The coupling of the vehicle material with biological material takes place in buffered aqueous solution.

26 Claims, 8 Drawing Figures

United States Patent [19]
Chibata et al.
[11] 4,090,919
[45] May 23, 1978

[54] WATER-INSOLUBLE TANNIN PREPARATION FOR IMMOBILIZATION OF PROTEINS

[75] Inventors: Ichiro Chibata, Suita; Tetsuya Tosa, Kyoto; Takao Mori, Takatsuki; Taizo Watanabe, Nagaokakyo; Ryujiro Sano, Toyonaka; Yuhsi Matuo, Suita, all of Japan

[73] Assignee: Tanabe Seiyaku Co., Ltd., Osaka, Japan

[21] Appl. No.: 760,441

[22] Filed: Jan. 19, 1977

[30] Foreign Application Priority Data

Jan. 29, 1976 Japan 51-8997
Aug. 27, 1976 Japan 51-102894
Oct. 30, 1976 Japan 51-131132

[51] Int. Cl.² C07G 7/02; C07C 69/76; C07G 7/00

[52] U.S. Cl. ..... 195/63; 195/68; 195/DIG. 11; 210/36; 260/6; 260/112 R; 426/422; 536/1; 536/32; 536/56; 560/68

[58] Field of Search ..... 195/63, 68, DIG. 11; 426/422; 260/473.5, 112 R, 6, 8; 210/500 M, 36; 536/1, 32, 56; 560/68

[56] References Cited

U.S. PATENT DOCUMENTS

2,650,194 8/1953 Rahn ..... 260/473.5 X
3,639,558 2/1972 Csizmas et al. ..... 195/63 X
3,736,231 5/1973 Stanley et al. 195/63
3,796,634 3/1974 Haynes et al. ..... 195/68 X
3,886,066 5/1975 Chen et al. ..... 210/500 M X
4,008,339 2/1977 Matsuda et al. ..... 426/422 X

Primary Examiner—David M. Naff
Attorney, Agent, or Firm—Bierman & Bierman

[57] ABSTRACT

A water-insoluble tannin preparation is obtained by covalent binding or physical adsorption of tannin onto a water-insoluble, hydrophilic carrier. The preparation has a specific affinity for proteins and can be used as an adsorbent for purification, isolation and/or separation of proteins (e.g., Enzymes, albumin, globulin, hormonal proteins) from a mixture of compounds. Further, the water-insoluble tannin preparation having a catalytically active enzyme absorbed thereon can be used as a heterogeneous catalyst to induce enzymatic reactions.

41 Claims, No Drawings

United States Patent [19]
Drobnik et al.
[11] **4,245,064**
[45] **Jan. 13, 1981**

[54] **ACTIVATED SOLID CARRIER AND A METHOD OF ITS PREPARATION**

[75] Inventors: **Jaroslav Drobník; Jaroslav Kalal; Jiří Labsky; Vladimír Saudek,** all of Praguč; **František Švec,** Kladno, all of Czechoslovakia

[73] Assignee: **Ceskoslovenska akademie ved,** Prague, Czechoslovakia

[21] Appl. No.: **11,428**

[22] Filed: **Feb. 12, 1979**

[30] **Foreign Application Priority Data**

Feb. 22, 1978 [CS] Czechoslovakia 1125/78

[51] **Int. Cl.**[3] **C08F 8/18;** C08C 19/12; C07H 13/02; C12N 11/10

[52] **U.S. Cl.** **525/329;** 435/178; 435/179; 435/180; 435/181; 525/336; 525/359; 525/508; 536/119

[58] **Field of Search** 525/359, 329, 336, 508; 435/178, 179, 180, 181; 536/119

[56] **References Cited**

U.S. PATENT DOCUMENTS

3,705,890	12/1972	Barker et al.	435/179
3,879,353	4/1975	Crawford	525/359
3,959,078	5/1976	Guire	435/179
4,090,919	5/1978	Chibata et al.	435/178
4,101,721	7/1978	Rich et al.	525/359

Primary Examiner—William F. Hamrock

[57] **ABSTRACT**

The invention relates to a solid insoluble carrier which is activated for bonding of nucleophilic groups and to a method of its preparation. The carrier contains active groups —O.CO.O.R, where R is the residue selected from the group comprising nitrophenyl, dinitrophenyl, trichlorophenyl, pentachlorophenyl, N-succinimidyl, N-phthalimidyl, and 8-quinolinyl. Active groups are bonded to polysaccharides, phenol-formaldehyde resins, polyacrylates, or polyacrylamides. The invention further relates to a method for preparation of the polymeric carrier, which consists in treatment of polymers carrying hydroxyl functions and selected from the group comprising polysaccharides, phenol-formaldehyde resins, polyacrylates, and polyacrylamides, with esters of chloroformic acid which contain the above mentioned active groups.

4 Claims, No Drawings

United States Patent [19]
Simon
[11] **4,251,631**
[45] **Feb. 17, 1981**

[54] **CROSS-LINKED ENZYME MEMBRANE**

[75] Inventor: **Shulamith Simon,** Ramat Gan, Israel

[73] Assignee: **Research Products Rehovot Ltd.,** Rehovot, Israel

[21] Appl. No.: **8,894**

[22] Filed: **Feb. 1, 1979**

[30] **Foreign Application Priority Data**

Feb. 23, 1978 [IL] Israel 54116

[51] **Int. Cl.**[3] **C12P 13/04;** C12N 11/08; C12M 1/40; C12N 9/76

[52] **U.S. Cl.** **435/106;** 435/95; 435/137; 435/176; 435/180; 435/190; 435/213; 435/288; 435/280

[58] **Field of Search** 435/174, 176, 177, 180, 435/181, 288, 137, 213, 190, 69, 95, 106, 280

[56] **References Cited**

U.S. PATENT DOCUMENTS

3,705,084	12/1972	Reynolds	435/180
3,796,634	3/1974	Haynes et al.	435/180
3,804,719	4/1974	Messing	435/176
3,977,941	8/1976	Vieth et al.	435/180
4,102,746	7/1978	Goldberg	435/288 X

FOREIGN PATENT DOCUMENTS

1183260 3/1970 United Kingdom .

OTHER PUBLICATIONS

Silman et al., Papain Membrane on a Collodion Matrix Science, vol. 150, 1965 (pp. 758–760).
Simon et al., Effectiveness of Enzyme—Membrane Filtration Reactors, Biotechnological Applications of Protein and Enzymes, Academic Press, N.Y., 1977 (pp. 169–181).
Zaborsky, O., Immobilized Enzymes, CRC Press, Cleveland, Ohio, 1973 (pp. 61–74).

Primary Examiner—David M. Naff
Attorney, Agent, or Firm—Millen & White

[57] **ABSTRACT**

A cross-linked enzyme membrane is prepared by directly adsorbing enzymes into the pores of a microporous non-fibrous filter membrane made of a silica modified vinylchloride polymer and then cross-linking the enzyme with a bi-functional coupling agent whereby enzyme molecules are cross-linked to each other without chemically bonding the enzyme molecules to the membrane. The cross-linked enzyme membrane is used to carry out enzymatic reactions by passing a solution of substrate for the enzyme through the membrane under a pressure differential.

15 Claims, No Drawings

United States Patent [19]
Messing et al.
[11] **4,246,349**
[45] **Jan. 20, 1981**

[54] **STABILIZATION OF IMMOBILIZED BACTERIA**

[75] Inventors: **Ralph A. Messing,** Horseheads; **Robert A. Oppermann,** Painted Post; **William S. Ramsey,** Corning; **Milton M. Takeguchi,** Big Flats, all of N.Y.

[73] Assignee: **Corning Glass Works,** Corning, N.Y.

[21] Appl. No.: **939,176**

[22] Filed: **Sep. 5, 1978**

[51] **Int. Cl.**[3] **C12N 11/14**

[52] **U.S. Cl.** **435/176;** 435/174; 435/260

[58] **Field of Search** 195/59, 63, 68; 426/61; 435/176, 174, 260

[56] **References Cited**

U.S. PATENT DOCUMENTS

4,153,510 5/1979 Messing et al. 195/59

OTHER PUBLICATIONS

Douglas et al., In-Use Evaluation of Commercially Available Set of Quality Control Cultures, Applied Microbiology, vol. 25, No. 2, Feb., 1973, (pp. 230–234).
Stadhouders et al., Preservation of Starters and Mass Production of Starter Bacteria, Neth. Milk Dairy J., vol. 23, 1969, (pp. 182–199).

Primary Examiner—David M. Naff
Attorney, Agent, or Firm—William E. Maycock; Clinton S. Janes, Jr.

[57] **ABSTRACT**

Bacteria immobilized by adsorption on an inorganic carrier are stabilized by carrying out the adsorption procedure in the presence of from about 1 to about 20% weight per volume of sucrose of nonfat dry milk solids and lyophilizing the adsorbed bacteria.

8 Claims, No Drawings

United States Patent [19]
Hier et al.
[11] **4,246,350**
[45] **Jan. 20, 1981**

[54] **PROTEIN IMMOBILIZATION ON CHELATING RESINS**

[75] Inventors: **Deborah E. Hier,** Stamford, Conn.; **Patrick J. Oriel,** Midland, Mich.

[73] Assignee: **The Dow Chemical Company,** Midland, Mich.

[21] Appl. No.: **16,587**

[22] Filed: **Mar. 1, 1979**

[51] **Int. Cl.**[3] **C12N 11/08**

[52] **U.S. Cl.** ..... **435/180;** 260/112 R; 435/94; 435/176; 435/234

[58] **Field of Search** ..... 435/94, 174, 180, 181, 435/176, 234; 423/24; 260/112 R

[56] **References Cited**

U.S. PATENT DOCUMENTS

3,794,563	2/1974	Barker et al.	435/181 X
3,912,593	10/1975	Barker et al.	435/176
3,990,943	11/1976	Bouniot et al.	435/94
4,025,389	5/1977	Poulson et al.	435/94
4,098,867	7/1978	Grinstead et al.	423/24

Primary Examiner—David M. Naff

[57] **ABSTRACT**

Proteins such as enzymes are immobilized on macroporous resins having recurring bis-picolylamine, imino diacetate or hydroxyethyl picolylamine chelating sites. Immobilization is carried out by contacting the resin with a multivalent metal ion selected from the transition metals or rare earth metals and adsorbing the protein to the resin. This immobilization technique permits strongly binding protein to a high surface area resin. The protein can be readily removed from the resin by simply flushing the resin with an appropriate solution.

7 Claims, No Drawings

United States Patent [19]

Keyes

[11] **4,206,286**

[45] **Jun. 3, 1980**

[54] **IMMOBILIZATION OF PROTEINS ON INORGANIC SUPPORTS**

[75] Inventor: **Melvin H. Keyes**, Sylvania, Ohio

[73] Assignee: **Technicon Instruments Corporation**, Tarrytown, N.Y.

[21] Appl. No.: **850,890**

[22] Filed: **Nov. 14, 1977**

[51] **Int. Cl.**[2] **C07G 7/00**; C07G 7/02

[52] **U.S. Cl.** **435/176**; 435/190

[58] **Field of Search** ..... 195/63, 68, DIG. 4; 260/112 R; 435/176, 190

[56] **References Cited**

U.S. PATENT DOCUMENTS

3,519,538	7/1970	Messing et al.	195/63
3,796,634	3/1974	Haynes et al.	195/68 X
3,804,719	4/1974	Messing	195/63 X
3,850,751	11/1974	Messing	195/63
3,873,426	3/1975	Katchalski et al.	195/63
3,930,951	1/1976	Messing	195/63
3,969,287	7/1976	Jaworek et al.	195/68 X
3,982,997	9/1976	Eaton et al.	195/63 X
4,004,979	1/1977	Arrameas et al.	195/68

OTHER PUBLICATIONS

Martensson, K., Preparation of an Immobilized Two--Enzyme System, B-Amylase-Pullulanase to an Acrylic Copolymer for the Conversion of Starch to Maltose, Biotechnol, and Bioeng. vol. XVI, 1974 (pp. 567-577).

Primary Examiner—David M. Naff
Attorney, Agent, or Firm—S. P. Tedesco

[57] **ABSTRACT**

A method of producing an immobilized protein composite, i.e. enzymes such as glucose oxidase, on an alumina support, comprising modifying some of the free functional groups of the protein such as amino groups, by reaction with an acid or anhydride, depositing the modified protein on a porous inorganic support at controlled pH and temperature, and cross-linking remaining free functional groups of the protein with adjacent deposited protein functional groups to form interprotein peptide bonds. The resultant composite has long-term continuous use.

17 Claims, No Drawings

United States Patent [19]

Cormier et al.

[11] **4,176,006**

[45] **Nov. 27, 1979**

[54] **ENZYME IMMOBILIZATION WITH A DISULPHIDE BRIDGE**

[75] Inventors: **Richard A. Cormier**, St. Hubert; **Claude F. Gagnon**, Repentigny, both of Canada

[73] Assignee: **Redpath Sugars Limited**, Montreal, Canada

[21] Appl. No.: **869,239**

[22] Filed: **Jan. 13, 1978**

[51] **Int. Cl.**[2] **C12D 13/00**; C07G 7/02

[52] **U.S. Cl.** **435/74**; 435/176; 435/174

[58] **Field of Search** ..... 195/63, 68, DIG. 4, 195/31 F

[56] **References Cited**

U.S. PATENT DOCUMENTS

3,198,781	8/1965	Benesch et al.	260/117
3,519,538	7/1970	Messing et al.	195/63
3,846,306	11/1974	Barker et al.	195/63 X
3,884,761	5/1975	Comling	195/68
3,904,478	9/1975	Dean et al.	195/63
4,008,126	2/1977	Keyes	195/63
4,069,106	1/1978	Stanley et al.	195/63 X
4,113,565	9/1978	Hurst	195/31 F

Primary Examiner—David M. Naff
Attorney, Agent, or Firm—Browdy and Neimark

[57] **ABSTRACT**

Immobilized enzymes are provided in which the enzyme is covalently linked by a disulphide group-containing bridge to on inorganic or organic support carrier. Immobilizing by this method enables spent immobilized enzyme to be readily regenerated by reduction under mild conditions of the disulphide bridge to provide the carrier with mercaptan groups, and adding fresh enzyme to the carrier. The immobilization method is applicable to a wide variety of enzymes using the same chemical coupling reagents. The method is especially useful for immobilizing expensive enzymes such as glucose isomerase.

18 Claims, No Drawings

148

United States Patent [19]

Barabino et al.

[11] **4,217,415**

[45] **Aug. 12, 1980**

[54] **IMMOBILIZATION OF AN ENZYME SUBSTRATE**

[75] Inventors: **Raymond C. Barabino**, Toledo; **Melvin H. Keyes**, Sylvania, both of Ohio

[73] Assignee: **Technicon Instruments Corporation**, Tarrytown, N.Y.

[21] Appl. No.: **886,504**

[22] Filed: **Mar. 14, 1978**

[51] **Int. Cl.**[2] **C07G 7/02**; G01N 31/14; G01N 31/08; C12D 13/04

[52] **U.S. Cl.** **435/98**; 435/22; 435/99; 435/176; 435/178

[58] **Field of Search** ..... 195/31 R, 31 F, 31 P, 195/63, 68, 116, 103.55, 99; 252/430; 435/22, 95, 99, 176, 178, 98

[56] **References Cited**

U.S. PATENT DOCUMENTS

2,459,108	1/1949	Lolkema	260/209
2,626,257	1/1953	Caldwell et al.	260/233.3
3,208,918	9/1965	Beers, Jr.	195/116 X
3,251,949	5/1966	Lipps, Jr.	195/31 P
3,436,309	4/1969	Ottinger et al.	195/31 R
3,912,590	10/1975	Slott et al.	195/31 R
3,918,183	10/1975	Johansson et al.	195/63 X
3,996,107	12/1976	Martensson	195/31 R
4,033,820	7/1977	Brouillard	195/31 F X
4,043,871	8/1977	Blixt et al.	195/68 X
4,048,018	9/1977	Coughlin et al.	195/63 X

OTHER PUBLICATIONS

Guilbault et al., Assay of Cholinesterase in an Electrode Systems with an Immobilized Substrate, Analytica Chim. Acta., vol. 85, 1976, pp. 295-306).

Primary Examiner—David M. Naff
Attorney, Agent, or Firm—S. P. Tedesco

[57] **ABSTRACT**

A carbohydrate substrate such as starch for a carbohydrate hydrolyzing enzyme is immobilized on a solid inorganic porous support to form a stable substrate-support composite useful in affinity chromatography and in methods where a precise amount of substrate is needed to perform an enzyme-substrate reaction to quantify the enzyme. The substrate may be activated with an agent such as cyanogen bromide or imidazole prior to deposition on the support so that it may be effectively modified while on the support. After deposition, the substrate is modified by reaction with an epoxyhalogen, aliphatic dihalide or aliphatic diamine to aid in holding it on the support. In an alternative embodiment, the carbohydrate, prior to deposition and modification on the support, is hydrolyzed with an enzyme, preferably dextranase.

8 Claims, No Drawings

United States Patent [19]

Cabane et al.

[11] **4,209,390**

[45] **Jun. 24, 1980**

[54] **PROCESS FOR BIOLOGICAL DENITRIFICATION OF EFFLUENTS**

[75] Inventors: **Bruno Cabane**, St. Cloud; **Joel Vergnault**, Argenteuil, both of France

[73] Assignee: **Produits Chimiques Ugine Kuhlmann**, Paris, France

[21] Appl. No.: **922,343**

[22] Filed: **Jul. 6, 1978**

[30] **Foreign Application Priority Data**

Aug. 7, 1977 [FR] France 77 21119

[51] **Int. Cl.**[2] **C02C 1/14**

[52] **U.S. Cl.** **210/12**; 210/17; 210/DIG. 28; 435/176; 435/245; 435/262; 435/813

[58] **Field of Search** ..... 210/2, 11, 12, 16, 17, 210/150, 151; 195/DIG. 28, 116, 3 R, 3 H, 2

[56] **References Cited**

U.S. PATENT DOCUMENTS

1,744,001	12/1927	Owen	195/116
3,617,540	11/1971	Bishop	210/16
3,709,364	1/1973	Savage	210/11
3,728,279	4/1973	Salomone	210/11
3,749,245	7/1973	Kerecz	210/12
3,829,377	8/1974	Hashimotu	210/11
3,846,289	11/1974	Jeris	210/DIG. 28
3,957,632	5/1976	Knupp	210/16
4,032,407	6/1977	Scott	195/116
4,043,936	8/1977	Francis	210/11
4,104,167	8/1978	Besik	210/197

FOREIGN PATENT DOCUMENTS

5148560	10/1974	Japan	210/DIG. 28
49-135448	12/1974	Japan	210/16
50-152552	8/1975	Japan	210/DIG. 28

OTHER PUBLICATIONS

Microbiology, Reid, McGraw-Hill, New York, 1972, 142-143.

Jeris, "Pilot-Scale, High Rate Biological Denitrification," JWPCF vol. 47, No. 8, pp. 2043-2059, Aug. 1975.

St. Amant, "Treatment of High Nitrate Waters," Jour. AWWA, pp. 659-662, May 21, 1969.

Primary Examiner—Ernest G. Therkorn
Attorney, Agent, or Firm—Pennie & Edmonds

[57] **ABSTRACT**

The present invention is directed to a process for biological denitrification of effluents, containing up to 10 g/l of nitric nitrogen, which comprises using an active denitrification support made of selected high performance denitrifying bacteria fixed on a neutral support.

8 Claims, No Drawings

United States Patent [19]
McMullen et al.
[11] **4,138,290**
[45] **Feb. 6, 1979**

[54] **GLUCOSE ISOMERIZATION UNDER EXPANDED BED CONDITIONS**

[75] Inventors: **William H. McMullen**, Norwalk, Conn.; **William Carasik**, Ridgewood, N.J.

[73] Assignee: **Novo Laboratories, Incorporated**, Wilton, Conn.

[21] Appl. No.: **679,445**

[22] Filed: **Apr. 22, 1976**

[51] **Int. Cl.**[2] **C12D 13/02**
[52] **U.S. Cl.** ..... **195/31 F**; 195/63; 195/68; 195/DIG. 11; 195/115
[58] **Field of Search** ..... 195/65, 63, 68, 115, 195/31 F, 116, DIG. 11

[56] **References Cited**

U.S. PATENT DOCUMENTS

3,821,086	6/1974	Lee et al.	195/116
3,928,143	12/1975	Coughlin	195/115
3,960,663	6/1976	Tamura et al.	195/31 F
3,980,521	9/1976	Amotz et al.	195/63

OTHER PUBLICATIONS

Emery et al., "Some Applications of Solid-Phase Enzymes in Biological Engineering", Birmingham Univ. Chem. Engineer, vol. 22, No. 2, (Summer 1971), pp. 37–41.

Barker et al., "Enzyme Reactors for Industry", Process Biochemistry, vol. 6, No. 10 (Oct. 1971), pp. 11–13.

Primary Examiner—Raymond N. Jones
Assistant Examiner—Thomas G. Wiseman
Attorney, Agent, or Firm—Fidelman, Wolffe & Waldron

[57] **ABSTRACT**

Expanded bed isomerization of glucose syrup to a glucose-fructose mixture having a fructose proportion exceeding about 40% of the glucose-fructose content by passing 30–55% w/w of glucose syrup through a cell-mass glucose isomerase preparation in the form of a bed of uniform particles of controlled size in the range of 150–2000 micrometers at a superficial syrup velocity of 0.5–15 meters an hour. Velocity and particle size are inversely related to create bed expansion within the range of 5–100%.

Bed life may be extended by substituting fresh catalyst for inactivated catalyst.

The isomerase should have an activity exceeding about 100 IGIC u/gm.

The isomerase should be weighted by incorporation therein of finely divided alumina particles.

5 Claims, No Drawings

United States Patent [19]
Lin et al.
[11] **4,281,065**
[45] **Jul. 28, 1981**

[54] **PHENCYCLIDINE CONJUGATES TO ANTIGENIC PROTEINS AND ENZYMES**

[75] Inventors: **Cheng-I Lin**, San Jose; **Prithipal Singh**, Santa Clara, both of Calif.

[73] Assignee: Syva Company, Palo Alto, Calif.

[21] Appl. No.: 6,935

[22] Filed: Jan. 25, 1979

[51] Int. Cl.[3] C12N 9/96; G01N 33/54; C07G 7/00
[52] U.S. Cl. ..... 435/188; 435/7; 435/177; 435/190; 260/121; 424/12; 23/230 B
[58] Field of Search ..... 435/7, 174, 177, 188, 435/190; 260/112 R, 121; 424/12, 85, 88; 23/230 B

[56] **References Cited**

U.S. PATENT DOCUMENTS

3,878,187	4/1975	Schneider et al.	435/7
3,966,556	6/1976	Rubenstein et al.	435/7
4,065,354	12/1977	Ullman et al.	435/188
4,067,959	1/1978	Bolz	435/7

OTHER PUBLICATIONS

Kalir et al., "The Use of Antiaminophencyclidine Antibodies for Development of a Sensitive Radioimmunoassay," *Chem. Abstracts*, vol. 85, No. 21, p. 5 (1976), Abs. #153656y.

Primary Examiner—Thomas G. Wiseman
Attorney, Agent, or Firm—Bertram I. Rowland

[57] **ABSTRACT**

Phencyclidine, PCP, derivatives having a non-oxo carbonyl functionality linked directly or through a linking group to the phenyl ring are provided for conjugation to antigenic compositions, particularly poly(amino acids), and enzymes. The antigenic conjugates are employed for the production of antibodies, which find particular use in immunoassays for the determination of phencyclidine, while the enzyme conjugate finds use in a homogeneous enzyme immunoassay for the determination of phencyclidine.

10 Claims, No Drawings

United States Patent [19]
Hüper
[11] **4,167,446**
[45] **Sep. 11, 1979**

[54] **WATER SOLUBLE CARRIER-BOUND PENICILLINACYLASE**

[75] Inventor: **Fritz Hüper**, Wuppertal, Fed. Rep. of Germany

[73] Assignee: **Bayer Aktiengesellschaft**, Fed. Rep. of Germany

[21] Appl. No.: **627,132**

[22] Filed: **Oct. 30, 1975**

Related U.S. Application Data

[63] Continuation-in-part of Ser. No. 449,272, Mar. 8, 1974, abandoned.

[30] **Foreign Application Priority Data**

Mar. 15, 1973 [DE] Fed. Rep. of Germany 2312824

[51] **Int. Cl.**[2] **C12D 9/00**; C12D 9/06; C07G 7/02
[52] **U.S. Cl.** **435/45**; 435/178; 435/179
[58] **Field of Search** ..... 195/63, 68, DIG. 11, 195/36 P

[56] **References Cited**

U.S. PATENT DOCUMENTS

3,639,213	2/1972	Ginger et al.	195/63
3,649,457	3/1972	Westman	195/68
3,715,277	2/1973	Dinella et al.	195/63
3,736,230	5/1973	Delin et al.	195/36 P
3,791,927	2/1974	Forgione et al.	195/63

Primary Examiner—David M. Naff
Attorney, Agent, or Firm—Jacobs & Jacobs

[57] **ABSTRACT**

A water-soluble non-colloidal penicillinacylase preparation containing penicillinacylase covalently bound to a water-soluble carrier is produced by reacting penicillinacylase with an activated derivative of a water soluble polysaccharide in aqueous solution. The water-soluble penicillinacylase preparation efficiently hydrolyzes penicillin and permits recovery of 6-aminopenicillanic acid efficiently in extremely high purity.

22 Claims, 3 Drawing Figures

United States Patent [19]
Robinson et al.
[11] **4,152,210**
[45] **May 1, 1979**

[54] **BIOLOGICALLY ACTIVE MATERIALS ATTACHED TO A FERROMAGNETIC SUPPORT**

[75] Inventors: **Peter J. Robinson; Peter Dunnill**, both of London; **Malcolm D. Lilly**, Orpington, all of England

[73] Assignee: **Beecham Group Limited**, Brentford, England

[21] Appl. No.: **573,306**

[22] Filed: **Apr. 30, 1975**

Related U.S. Application Data

[63] Continuation of Ser. No. 281,655, Aug. 18, 1972, abandoned.

[30] **Foreign Application Priority Data**

Aug. 27, 1971 [GB] United Kingdom 40297/71

[51] **Int. Cl.**[2] **C07G 7/02**
[52] **U.S. Cl.** **195/63**; 195/68; 195/DIG. 11; 195/116
[58] **Field of Search** ..... 195/63, 68, DIG. 11, 195/116; 210/222

[56] **References Cited**

U.S. PATENT DOCUMENTS

3,351,203	11/1967	Robb	210/222 X
3,470,067	9/1969	Warren et al.	210/222 X
3,519,538	7/1970	Messing et al.	195/63
3,705,084	12/1972	Reynolds	195/63
3,796,634	3/1974	Haynes et al.	195/63

Primary Examiner—David M. Naff
Attorney, Agent, or Firm—Finnegan, Henderson, Farabow & Garrett

[57] **ABSTRACT**

Biologically active materials such as enzymes attached to a ferromagnetic support such as iron or iron oxide particles enable a magnetic separation of the supported biologically active material from a reaction medium after carrying out a biochemical reaction.

19 Claims, No Drawings

United States Patent [19]

Hodgins et al.

[11] **4,229,537**

[45] **Oct. 21, 1980**

[54] **PREPARATION OF TRICHLORO-S-TRIAZINE ACTIVATED SUPPORTS FOR COUPLING LIGANDS**

[75] Inventors: **Leonard T. Hodgins**, New York, N.Y.; **Thomas H. Finlay**, Ridgewood, N.J.; **Alan J. Johnson**, New York, N.Y.

[73] Assignee: **New York University**, New York, N.Y.

[21] Appl. No.: **876,240**

[22] Filed: **Feb. 9, 1978**

[51] **Int. Cl.**[2] **C07G 7/00**; C07G 7/02

[52] **U.S. Cl.** **435/177**; 260/6; 435/178; 435/180; 435/181; 435/815; 544/217

[58] **Field of Search** ..... 195/63, 68, DIG. 11; 260/112 R, 6; 544/217; 435/174, 177, 178, 815, 179, 180, 181

[56] **References Cited**

U.S. PATENT DOCUMENTS

3,619,371	11/1971	Crook et al.	195/63
3,674,767	7/1972	Lilly et al.	195/63 X
3,788,948	1/1974	Kagedal et al.	195/63 X
3,824,150	7/1974	Lilly et al.	195/63
3,876,501	4/1975	Hanushewsky	195/63 X
4,007,089	2/1977	Smith	195/63 X
4,119,494	10/1978	Durand et al.	195/68

OTHER PUBLICATIONS

Kay et al., The Chemical Attachment of Chymotrypsin to Water-Insoluble Polymers Using 2-Amino-4,6-Dichloro-s-Triazine, Biochimicz et Biophysicz Acta, vol. 198, 1970 (pp. 276-285).

Abuchowski et al., Alteration of Immunological Properties of Bovine Serum Albumin by Covalent Attachment of Polyethylene Glycol, J. Biol. Chem., vol. 252, No. 11, 1977 (pp. 3578-3581).

Primary Examiner—David M. Naff
Attorney, Agent, or Firm—Holman & Stern

[57] **ABSTRACT**

Proteins and non-protein affinity ligands are covalently bonded to trichloro-s-triazine activated supports. The activated support is prepared by reacting a water-free insoluble solid support with trichloro-s-triazine in a non-aqueous medium and neutralizing HCl generated during the reaction with a tertiary amine which does not form an insoluble complex with the trichloro-s-triazine.

16 Claims, 2 Drawing Figures

United States Patent [19]

Limet et al.

[11] **4,253,844**

[45] **Mar. 3, 1981**

[54] **INSOLUBILIZED PROTEINS AND IMMUNOASSAYS UTILIZING THEM**

[75] Inventors: **Joseph Limet**, Marchin; **Cesar L. Cambiaso**, Kraainem; **Claude H. Moussebois**; **Pierre L. Masson**, both of Brussels, all of Belgium

[73] Assignee: **Technicon Instruments Corporation**, Tarrytown, N.Y.

[21] Appl. No.: **5,260**

[22] Filed: **Jan. 22, 1979**

[30] **Foreign Application Priority Data**

Jan. 26, 1978 [GB] United Kingdom 3238/78

[51] **Int. Cl.**[3] **G01N 33/54**

[52] **U.S. Cl.** ..... **23/230 B**; 252/408; 424/12; 435/177; 435/180; 435/181

[58] **Field of Search** ..... 23/230 B; 424/1, 12; 435/177, 180, 181; 252/408

[56] **References Cited**

U.S. PATENT DOCUMENTS

3,639,558	2/1972	Csizmas	435/177 X
4,070,246	1/1978	Kennedy	435/177 X
4,081,244	3/1978	Polito	23/230 B X
4,108,976	8/1978	Reese	424/1
4,140,662	2/1979	Reckel	435/181 X
4,175,073	11/1979	Carlsson	435/180 X
4,181,636	1/1980	Fischer	435/181 X

Primary Examiner—Sidney Marantz
Attorney, Agent, or Firm—S. P. Tedesco

[57] **ABSTRACT**

Insolublized antibodies, $F(ab')_2$ fragments thereof and protein antigens are made by coupling to a water-insoluble substrate using a bridging agent which covalently binds to sulphur atoms in antibody, fragment or protein rather than to free amino groups therein. This is preferably effected by using a chloracetyl-terminated bridging agent. Immunoassays utilizing these insolubilized reagents are described. One novel class of bridging agents comprising anhydride and monochloracetyl end groups, which is useful for making the said reagents, is also disclosed.

23 Claims, No Drawings

United States Patent [19]

Luderer et al.

[11] **4,282,315**

[45] **Aug. 4, 1981**

[54] **PREPARATION OF ENRICHED WHOLE VIRUS RADIOLIGAND**

[75] Inventors: **Albert A. Luderer**, Corning; **Hugh C. McDonald**, Horseheads, both of N.Y.

[73] Assignee: **Corning Glass Works**, Corning, N.Y.

[21] Appl. No.: **74,918**

[22] Filed: **Sep. 13, 1979**

[51] **Int. Cl.**[3] **C12N 7/00**; C12N 7/02; G01N 33/54; G01N 33/00

[52] **U.S. Cl.** ..... **435/5**; 435/7; 435/177; 435/188; 435/235; 435/236; 435/239; 424/1.5; 424/12; 23/230 B

[58] **Field of Search** ..... 23/230 B, 230.3; 424/1, 424/1.5, 8, 12, 89; 435/4, 5, 7, 235, 236, 810, 239, 188, 177

[56] **References Cited**

U.S. PATENT DOCUMENTS

3,826,613	7/1974	Parikh et al.	435/5
4,168,300	9/1979	Andersson et al.	424/89
4,176,174	11/1979	Russell et al.	424/89
4,178,360	12/1979	Cleeland et al.	424/12
4,195,074	3/1980	Safford	424/89

OTHER PUBLICATIONS

McDonald et al., "Preparation and Characterization of an ^{125}T-Labeled Sendai Virus Ligand", *Anal. Biochem.* vol. 106, (1980), pp. 127-133.

Baird et al., "Evidence That MuLV-Induced Thymic Lymphoma Cells Possess Specific Cell Membrane Binding Sites For MuLV", *Int. J. Cancer*, vol. 19, (1977), pp. 403-413.

Fowler et al., "Binding Characteristics of Rauscher Leukemia Virus Envelope Glycoprotein gp 71 to Murine Lymphoid Cells", *J. Vir.* vol. 24, No. 3 (1977), pp. 729-735.

Greaves, "Virus 'Receptors' on Lymphocytes", *Scand. J. Immunol.*, vol. 5, Suppl. 5, (1976), pp. 113-123.

Scheid et al., "Activation of Cell Fusion and Infectivity by Proteolytic Cleavage of a Sendai Virus Glycoprotein", *Proteuses and Biological Control*, Cold Spring Harbor Laboratory, (1975), pp. 645-659.

Shuurs et al., "Enzyme-Immunoassay", *Clin. Chim. Acta*, vol. 81, No. 1 (1977), pp. 1-40.

Fenner et al., *Medical Virology*, Academic Press, NY, (1970), pp. 45-46.

Baum et al., "Affinity Chromatography", *Immobilized Enzymes, Antigens, Antibodies, and Peptides*, Weetall ed., Marcel Dekker, Inc., NY, pp. 419-425, 451-454.

Primary Examiner—Thomas G. Wiseman
Attorney, Agent, or Firm—William E. Maycock

[57] **ABSTRACT**

Obtaining a virus subpopulation, useful in qualitative and quantitative biological assay procedures, of enhanced sensitivity toward host cells for the virus by contacting a virus population with an inanimate substrate having moieties which mimic host cell receptor sites for cell binding protein of the virus and recovering as said subpopulation the portion of the initial virus population which complexes with the substrate.

42 Claims, 2 Drawing Figures

United States Patent [19]

Bogerman et al.

[11] **4,242,219**

[45] **Dec. 30, 1980**

[54] **NOVEL ENZYME PARTICLES AND THEIR PREPARATION**

[75] Inventors: **Pieter K. Bogerman**, Naaldwijk; **Petrus J. Eygermans**, Wateringen; **Antoon G. van Velzen**, The Hague, all of Netherlands

[73] Assignee: **Gist-Brocades N.V.**, Delft, Netherlands

[21] Appl. No.: **919,082**

[22] Filed: **Jun. 26, 1978**

[30] **Foreign Application Priority Data**

Jul. 20, 1977 [GB] United Kingdom 30556/77

[51] **Int. Cl.**[3] **A61K 37/48**; C11D 3/386; C12N 9/96; C12N 9/98

[52] **U.S. Cl.** **252/174.12**; 252/174.17; 252/174.25; 252/132; 252/DIG. 12; 424/35; 424/38; 424/94; 435/177; 435/178; 435/187; 435/188

[58] **Field of Search** ..... 252/89, 132, DIG. 12, 252/174.12; 195/62, 63, 66 R, 68; 435/177, 178, 187, 188; 424/94, 31, 32, 33, 35, 38

[56] **References Cited**

U.S. PATENT DOCUMENTS

3,072,532	1/1963	Innerfield	195/63 X
3,519,570	7/1970	McCarty	252/135
3,661,786	5/1972	Des Forges	252/99
3,723,327	3/1973	van Kampen	252/110
3,775,331	11/1973	Borrello	252/89
3,853,780	10/1974	Mostow	252/132
3,868,336	2/1975	Mazzola	252/527
4,009,076	2/1977	Green	195/63
4,016,041	4/1977	van Kampen	195/68
4,106,991	8/1978	Markussen	435/187

FOREIGN PATENT DOCUMENTS

1204123	9/1970	United Kingdom	252/106
1362365	8/1974	United Kingdom .	
1509866	5/1978	United Kingdom .	

Primary Examiner—Dennis L. Albrecht

[57] **ABSTRACT**

A novel process for preparing non-dusting, enzyme-containing particles, e.g. for introduction into washing compositions, comprising homogeneously mixing an amount of an enzyme in dry or substantially dry form to give the desired enzyme activity in the particles when formed, about 20% to about 60% of a hydrophilic organic cohesive compatible with the enzyme, about 10% to about 60% of a building agent suitable for use in enzyme compositions, and a sufficient amount of water, if necessary, to give a moisture content in the particles, when formed, of from 5% to 15%, mechanically dividing the mixture obtained into particles of the desired size, and coating the particles to prevent loss of moisture and the novel enzyme particles produced thereby as well as washing compositions and pharmaceutical compositions containing said enzyme particles.

33 Claims, No Drawings

United States Patent [19]
DeLuca-McElroy
[11] 4,234,681
[45] Nov. 18, 1980

[54] IMMOBOLIZED LIGHT EMITTING SYSTEMS

[75] Inventor: Marlene A. DeLuca-McElroy, La Jolla, Calif.

[73] Assignee: The Regents of the University of California, Berkeley, Calif.

[21] Appl. No.: 926,642

[22] Filed: Jul. 21, 1978

Related U.S. Application Data

[63] Continuation-in-part of Ser. No. 750,436, Dec. 14, 1976, abandoned.

[51] Int. Cl.[3] C12Q 1/66; C12N 11/18; C12N 11/14; C12N 11/10

[52] U.S. Cl. ..... 435/8; 23/230 B; 435/175; 435/176; 435/177; 435/178; 435/181

[58] Field of Search ..... 195/63, 68, DIG. 11, 195/103.5 R, 103.5 L, 99; 23/230 B; 435/8, 176, 175, 177, 178, 181

[56] References Cited

U.S. PATENT DOCUMENTS

3,817,837 6/1974 Rubenstein et al. ..... 195/103.5 R
3,940,250 2/1976 Plakas et al. ..... 23/230 B

OTHER PUBLICATIONS

Erlanger, et al., Insoluble Bacterial Luciferases: A New Approach to Some Problems in Bioluminescence, Biochemical and Biophysical Research Comm. vol. 40, No. 1 1970 (pp. 70–76).
Picciolo, et al., Applications of Luminescent Systems to Intectidus Diseased Methodology, Goddard Space Flight Center, Greenbelt, Maryland, 1976 (pp. 1–4).
Waters, et al., Flavin binding by Bacterial Luciferase: Affinity Chromatography of Bacterial Luciferase, Biochem. Biophys. Res. Comm., vol. 57, No. 4, 1974 (pp. 1152–1158).
Hommerstedt, R. H. An Automated Method for ATP Analysis Utilizing the Luciferi-Luciferase Reaction Analytical Biochemistry, vol. 52, 1973 (pp. 449–455).
Brolin, et al., Photokinetic Micro Assay Based on Dehydrogenase Reactions and Bacterial Luciferase, Analytical Biochemistry. vol. 42, 1971 (pp. 124–135).
Stanley P. E., Determination of Subpicomole Levels of NADH and FMN Using Luciferase and the Liquid Scintillation Spectrometer, Analytical Biochemistry, vol. 39, 1971 (pp. 441–453).
Weetall, H. H., Immobilized Enzymes, Antigens, Antibodies and Peptides, Marcel Dekker, Inc. N.Y., 1975 (pp. 17, 18 & 74–80).
Weetall H., Applications of Immobilized Enzymes, Analytical Chemistry, vol. 48 No. 7, 6, 1976 (pp. 544A–548A, 550A, 554A, 556A, 557A & 558A).

Primary Examiner—David M. Naff
Attorney, Agent, or Firm—Phillips, Moore, Weissenberger, Lempio & Majestic

[57] ABSTRACT

Light emitting systems are immobilized on a support to provide a localized, concentrated release of light that increases the sensitivity of detection systems when assaying bio-materials. A preferred immobilized light emitting system contains an oxidoreductase and luciferase bound to glass beads that are attached to an elongated glass rod.

7 Claims, No Drawings

United States Patent [19]
Puls et al.
[11] 4,275,159
[45] Jun. 23, 1981

[54] PROCESS FOR THE PRODUCTION OF XYLOSE BY ENZYMATIC HYDROLYSIS OF XYLAN

[75] Inventors: Jurgen Puls, Pinneberg; Michael Sinner, Dassendorf; Hans-Hermann Dietrichs, Reinbek, all of Fed. Rep. of Germany

[73] Assignee: Projektierung Chemische Verfahrenstechnik GmbH, Ratingen, Fed. Rep. of Germany

[21] Appl. No.: 61,860

[22] Filed: Jul. 30, 1979

Related U.S. Application Data

[62] Division of Ser. No. 836,713, Sep. 26, 1977, Pat. No. 4,200,692.

[30] Foreign Application Priority Data

Sep. 29, 1976 [DE] Fed. Rep. of Germany 2643800

[51] Int. Cl.[3] C12N 11/18; C12N 11/14; C12N 9/14; C12N 9/32

[52] U.S. Cl. 435/175; 435/176; 435/195; 435/204; 435/814

[58] Field of Search 435/175, 176, 179, 195, 435/200, 814

[56] References Cited

FOREIGN PATENT DOCUMENTS

46-12936 4/1971 Japan .
46-121788 6/1971 Japan .
47-15743 5/1972 Japan .

OTHER PUBLICATIONS

Puls, et al. "Carrier Bound Xylanases", *Chem. Abstracts*, vol. 81, No. 19, (1974) p. 215, Abs. No. 116603a.
Hashimoto, et al., "Fractionation of Subunits in Xylanases from *Trichoderma viride* with a New Simple Preparative Polyacrylamide Gel Electrophoresis Apparatus", *Agr. Biol. Chem.*, vol. 40, No. 3 (1976) pp. 635–636.
Blatt, "Ultrafiltration for Enzyme Concentration", *Methods in Enzymology*, vol. XXII, Jakoby ed., Academic Press, N.Y. (1971) pp. 39–49.

Primary Examiner—Thomas G. Wiseman
Attorney, Agent, or Firm—Schwartz, Jeffery, Schwaab, Mack, Blumenthal & Koch

[57] ABSTRACT

A process for the production of xylose by enzymatic hydrolysis of xylan wherein an aqueous solution containing xylan is treated with a carrier having bonded thereto xylanase enzyme and a carrier having bonded thereto β-xylosidase and, optionally, uronic acid-splitting enzyme.

3 Claims, 3 Drawing Figures

United States Patent [19]
Yoshikazu et al.
[11] 4,191,810
[45] Mar. 4, 1980

[54] PROCESS FOR THE PRODUCTION OF IMMOBILIZED GLUCOSE ISOMERASE

[75] Inventors: Nakajima Yoshikazu; Suzuki Kazumasa, both of Okayama; Makino Tsuyoshi, Kamakura, all of Japan

[73] Assignee: Mitsui Sugar Co., Ltd., Tokyo, Japan

[21] Appl. No.: 856,604

[22] Filed: Dec. 1, 1977

[30] Foreign Application Priority Data

Dec. 3, 1976 [JP] Japan 51/144639

[51] Int. Cl.[2] C07G 7/02

[52] U.S. Cl. 435/177; 435/234

[58] Field of Search ..... 195/63, 68, 31 F, DIG. 11

[56] References Cited

U.S. PATENT DOCUMENTS

3,838,007 9/1974 van Velzen 195/68
3,980,521 9/1976 Amotz et al. ..... 195/31 F
4,001,082 1/1977 Tsumura et al. ..... 195/31 F
4,025,389 5/1977 Poulsen et al. ..... 195/31 F
4,116,771 9/1978 Amotz et al. 195/63

Primary Examiner—Lionel M. Shapiro
Attorney, Agent, or Firm—Kane, Dalsimer, Kane, Sullivan and Kurucz

[57] ABSTRACT

Immobilized glucose isomerase preparation is prepared from microbial cells of Actinomycetes having glucose isomerase activity by the following procedures:

A liquid culture of said microorganism is adjusted to a pH value of 6 to 9, heated to a temperature of 70° to 80° C., held for 1 to 20 minutes at the temperature and cooled rapidly. Then the microbial cells are harvested from the culture by filtration or centrifugation, frozen, subsequently thawed, and mixed with gelatin or sodium caseinate in an amount of 2 to 10% based on the dry substance of the treated cells. The mixture is kneaded to form a paste, which is impregnated in 0.2 to 1.0% glutaraldehyde solution in acetone to form a solid. Then the solidified material are separated from the acetonic solution by filtration without washing and finally dried to form immobilized glucose isomerase.

11 Claims, 1 Drawing Figure

United States Patent [19]
Bailey et al.
[11] 4,204,041
[45] May 20, 1980

[54] HIGH LOADING OF IMMOBILIZED ENZYMES ON ACTIVATED CARBON SUPPORTS

[75] Inventors: James E. Bailey, Houston, Tex.; Yong K. Cho, Rockford, Ill.

[73] Assignee: Illinois Water Treatment Company, Rockford, Ill.

[21] Appl. No.: 838,544

[22] Filed: Oct. 3, 1977

[51] Int. Cl.[2] C07G 7/02

[52] U.S. Cl. 435/177

[58] Field of Search ..... 195/63, 68, DIG. 11

[56] References Cited

U.S. PATENT DOCUMENTS

3,919,048 11/1975 Dahlmans et al. 195/63

OTHER PUBLICATIONS

Liu, et al., Immobilization of Lactase on Carbon, Biotechnology and Bioengineering, vol. XVII, 1975 (pp. 1695–1696).
Line, et al., Pepsin Insolubilized by Covalent Attachment to Glass, Biochim. Biophys. Acta, vol. 242, 1971 (pp. 194–202).
Zaborsky, O., Immobilized Enzymes, CRC Press, Cleveland, Ohio 1973 (p. 6).

Primary Examiner—David M. Naff
Attorney, Agent, or Firm—Mason, Kolehmainen, Rathburn & Wyss

[57] ABSTRACT

Enzymes are immobilized on activated carbon supports at high load levels and with high stability by a procedure whereby a carbon support is first activated with a water-soluble carbodiimide derivative which forms a highly reactive intermediate with carboxyl and other active organic radicals on the surface of the carbon support; thereafter the complex of the carbon and carbodiimide is treated with an enzyme solution whereby the enzyme displaces the carbodiimide and forms a carbon-enzyme complex wherein the enzyme is immobilized and yet the carbon retains its surface activity. Preferred immobilizing agents are quaternary ammonium forms of aminocarbodiimides or hydrochloric acid salts of water-soluble carbodiimides. The immobilization of the enzymes on activated carbon provides materials which are easily handled and which are stabilized against denaturation by hydrogen peroxide.

4 Claims, 3 Drawing Figures

United States Patent [19]

Lai et al.

[11] **4,066,512**

[45] **Jan. 3, 1978**

[54] **BIOLOGICALLY ACTIVE MEMBRANE MATERIAL**

[75] Inventors: **Chung Jung Lai**, Watertown; **Stanley M. Goldin**, Norwood, both of Mass.

[73] Assignee: **Millipore Corporation**, Bedford, Mass.

[21] Appl. No.: **684,746**

[22] Filed: **May 10, 1976**

Related U.S. Application Data

[63] Continuation of Ser. No. 503,624, Sept. 6, 1974, abandoned.

[51] **Int. Cl.**[2] C07G 7/00; C07G 7/02; G01N 31/14

[52] **U.S. Cl.** ..... **195/127**; 195/63; 195/103.5 R; 195/103.5 A; 195/103.5 Y; 260/6; 260/112 R; 424/2

[58] **Field of Search** ..... 195/63, 68, DIG. 11, 195/103.5 R, 127; 424/94, 2; 427/338, 414, 439; 260/2.5 A, 6

[56] **References Cited**

U.S. PATENT DOCUMENTS

2,930,736	3/1960	Sullivan et al.	195/68 X
3,322,632	5/1967	Schwick et al.	424/94 X
3,705,084	12/1972	Reynolds	195/63
3,758,396	9/1973	Vieth et al.	195/68 X
3,809,613	5/1974	Vieth et al.	195/63
3,843,446	10/1974	Vieth et al.	195/68
3,865,548	2/1975	Padamer	195/127 X

OTHER PUBLICATIONS

Olson, et al., Immobilized Enzymes in Food and Microbial Processes, Plenum Press N.Y. 8/1974, (pp. 157–168, 176–178 & 181–182).

Goldman, et al., Papain Membrane on a Collodion Matrix, Science, vol. 150, 1965, (pp. 758–760).

Thong, et al., Observations on the Activity of Enzymes after Filtration on (and through) a Nitrocellulose Membrane, Biochemical and Biophysical Res. Comm., vol. 31, 1968 (pp. 1–8).

Wheeler, et al., Properties of two Phosphatases, Attached to Insoluble Cellulose Matrices; Biochim. Biophys. Acta. vol. 191, 1969 (pp. 187–189).

Zaborsky, O., Immobilized Enzymes, CRC Press, Chemical Rubber Co., Cleveland, Ohio, 1973 (pp. 73, 80, 83, 130–132, 151 & 158).

Primary Examiner—David M. Naff

[57] **ABSTRACT**

A composite membrane structure for immobilizing biologically active materials, such as enzymes, is formed by coating a microporous polymeric membrane with a thin layer of an inert proteinaceous material, such as zein or collagen, so that the resultant coated membrane retains intercommunicating capillary pores that extend through its structure. Immobilization of a biologically active material is carried out by contacting the coated membrane with the biologically active material in solution and drying. Biologically active materials immobilized on the membrane can be used to perform biochemical reactions and are useful in carrying out tests for glucose and uric acid.

18 Claims, 5 Drawing Figures

United States Patent [19]

Thompson et al.

[11] **4,102,745**

[45] *** Jul. 25, 1978**

[54] **PROCESS FOR PRODUCING DEXTROSE USING MIXED IMMOBILIZED ENZYMES**

[75] Inventors: **Kenneth N. Thompson**, Beach, N. Dak.; **Norman E. Lloyd**; **Richard A. Johnson**, both of Clinton, Iowa

[73] Assignee: **Standard Brands Incorporated**, New York, N.Y.

[*] Notice: The portion of the term of this patent subsequent to Mar. 8, 1994, has been disclaimed.

[21] Appl. No.: **773,450**

[22] Filed: **Mar. 2, 1977**

Related U.S. Application Data

[63] Continuation-in-part of Ser. No. 500,975, Aug. 26, 1974, Pat. No. 4,011,137.

[51] **Int. Cl.**[2] **C12D 13/02**

[52] **U.S. Cl.** ..... **195/31 R**; 195/13; 195/DIG. 11

[58] **Field of Search** ..... 195/37 R, 63, 68, DIG. 11, 195/115, 13

[56] **References Cited**

U.S. PATENT DOCUMENTS

3,838,007	9/1974	van Velzen	195/31 R
3,849,253	11/1974	Harvey et al.	195/68
4,011,137	3/1977	Thompson et al.	195/31 R

Primary Examiner—Raymond N. Jones
Assistant Examiner—Thomas G. Wiseman

[57] **ABSTRACT**

Process for converting starch to dextrose wherein a partially hydrolyzed starch solution containing at least 10 percent hydrolyzed starch is contacted with an enzyme system under conditions whereby substantially complete conversion of the starch to dextrose is achieved. The enzyme system comprises immobilized glucoamylase and alpha-amylase selected from the group consisting of soluble alpha-amylase, immobilized alpha-amylase and mixtures thereof.

4 Claims, No Drawings

United States Patent [19]

Thang et al.

[11] **4,039,382**

[45] **Aug. 2, 1977**

[54] **IMMOBILIZED RIBONUCLEASE AND ALKALINE PHOSPHATASE**

[75] Inventors: **Minh-Nguy Thang**, Bagneux; **Annie Guissani born Trachtenberg**, Fresnes, both of France

[73] Assignee: **Choay S. A.**, Paris, France

[21] Appl. No.: **678,459**

[22] Filed: **Apr. 19, 1976**

[30] **Foreign Application Priority Data**

Apr. 23, 1975 France 75.12667

[51] **Int. Cl.**[2] **C07G 7/02**; C12B 1/00

[52] **U.S. Cl.** ..... **195/28 N**; 195/63; 195/68; 195/DIG. 11; 195/116

[58] **Field of Search** ..... 195/63, 68, DIG. 11, 195/116, 28 N

[56] **References Cited**

PUBLICATIONS

Lee, J. C., Preparation and Properties of Water Insoluble Derivatives of Ribonuclease Ti. Biochim. Biophys. Acta., vol. 235, 1971, (pp. 435–441).

Woetall, H. H., Alkaline Phosphatase Insolubilized by Covalent Linkage to Porons Glass., Nature., vol. 223, 1969, (pp. 959–960).

Hultin, H. O., Characteristics of Immobilized Multi-Enzyme Systems, Journal of Food Science, vol. 39, 1974, (pp. 647–652).

Zaborsky, O., Immobilized Enzymes, CRC Press, Cleveland, Ohio, 1973, (pp. 124–126).

Primary Examiner—David M. Naff
Attorney, Agent, or Firm—Browdy and Neimark

[57] **ABSTRACT**

An insoluble, solid matrix carrying simultaneously several different enzymatic functions, is constituted by the conjoint association by irreversible binding on a previously activated matrix support, of a nuclease selected from the group of ribonucleases A, T_1, T_2, U_2 and an alkaline phosphatease. Free activated groups of the matrix after binding of the enzymes, are neutralized by a free amino organic base. The support is selected from among non-denaturing supports effecting the irreversible physical adsorption of the enzymes, such as supports of glass or quartz beads, highly cross-linked gels of the agarose or cellulose type. Polymers A_nU_{OH}, A_nC_{OH}, A_nG_{OH} and/or oligonucleotides U, C, A or G, of predetermined lengths, can be obtained by fractionating the polyribonucleotides by incubation with the insoluble solid matrix.

16 Claims, No Drawings

United States Patent [19]

Iwasaki et al.

[11] **4,184,919**

[45] **Jan. 22, 1980**

[54] **METHOD OF GELLING MICROBIAL MYCELIA**

[75] Inventors: **Taisuke Iwasaki**, Hino; **Toshihiko Kikuchi**, Tokyo, both of Japan

[73] Assignee: **Snow Brand Milk Products Co., Ltd.**, Sapporo, Japan

[21] Appl. No.: **891,217**

[22] Filed: **Mar. 29, 1978**

Related U.S. Application Data

[63] Continuation-in-part of Ser. No. 780,496, Mar. 23, 1977, abandoned.

[30] **Foreign Application Priority Data**

Mar. 31, 1976 [JP] Japan 51-35249

[51] **Int. Cl.**[2] **C07G 7/02**

[52] **U.S. Cl.** **435/175**; 195/54; 195/56; 195/63; 195/DIG. 11; 435/182

[58] **Field of Search** 195/54, 56, 68, 63, 195/DIG. 11

[56] **References Cited**

U.S. PATENT DOCUMENTS

3,980,521	9/1976	Amotz et al.	195/68

FOREIGN PATENT DOCUMENTS

2223340 11/1972 Fed. Rep. of Germany .

OTHER PUBLICATIONS

Chibata et al., Applied Microbiology, May 1974, pp. 878–885.

Broun et al., Biotechnology and Bioengineering, vol. XV, pp. 350–375 (1973).

Primary Examiner—Lionel M. Shapiro
Attorney, Agent, or Firm—Stevens, Davis, Miller & Mosher

[57] **ABSTRACT**

The disclosed method involves adding a crosslinking reagent to mycelia which contain enzymes, freezing the mixture and then thawing the frozen mycelia. The resulting gelation immobilizes the intracellular enzyme in the mycelia. The gel may be used in the enzyme industry as a highly active enzyme preparation.

9 Claims, No Drawings

United States Patent [19]
Shahani et al.
[11] **4,279,998**
[45] **Jul. 21, 1981**

[54] **REGENERABLE INSOLUBLE SUPPORT FOR PROTEIN IMMOBILIZATION**

[75] Inventors: **Khemchand M. Shahani**, Lincoln; **Frederick W. Wagner**, Walton, both of Nebr.; **Arun Kilara**, State College, Pa.

[73] Assignee: **The Board of Regents of the University of Nebraska**, Lincoln, Nebr.

[21] Appl. No.: **47,727**

[22] Filed: **Jun. 12, 1979**

Related U.S. Application Data

[63] Continuation-in-part of Ser. No. 697,240, Jun. 17, 1976, abandoned.

[51] **Int. Cl.**[3] **C12N 11/00**; C12N 11/16; C12N 11/10; C12N 11/06

[52] **U.S. Cl.** ..... **435/174**; 252/411 R; 260/141; 426/34; 435/178; 435/181

[58] **Field of Search** ..... 435/174, 177, 178, 179, 435/180, 181; 435/174, 177, 178, 179, 180, 181; 260/141; 252/411 R; 426/34

[56] **References Cited**

U.S. PATENT DOCUMENTS

4,043,869 8/1977 Barker et al. ..... 435/181 X

OTHER PUBLICATIONS

Cuatrecasas, et al., Adsorbents For Affinity Chromatography, Biochemistry, vol. 11, No. 12, 1972 (pp. 2291–2298).
Cuatrecasas, et al., Affinity Chromatography, Methods of Enzymology, vol. XXII, 1971 (pp. 345–379).
Cuatrecasas, P., Protein Purification By Affinity Chromatography, J. Biol. Chem., vol. 245, No. 12, 1970 (pp. 3059–3065).
Woychik et al., Preparation and Application of Immobilized B—Galactosidase of *Saccharomyces Lactis* Immobilized Enzymes in Food and Microbial Processes, Plenum Press, N.Y., 1974 (pp. 41–49).

Primary Examiner—David M. Naff
Attorney, Agent, or Firm—Vincent L. Carney

[57] **ABSTRACT**

To permit regeneration of an insoluble support for immobilized proteins, the protein is connected to the support by a spacer arm containing a diazo linkage and when the protein is denatured, the spacer arm is broken by reducing the diazo linkage to remove the denatured protein. New native protein of the same or of a different type is joined to the arm to permit reuse of the support. A preferred support containing a spacer arm is p-(N-acetyl-L-tyrosine azo)benzamidoethyl agarose. A protein is coupled to the carboxyl group of N-acetyl-L-tyrosine and when the protein is spent, the azo bond is reduced to remove the protein and leave p-aminobenzamido agarose which is diazotized and recoupled to N-acetyl-L-tyrosine which is then coupled to fresh protein.

12 Claims, No Drawings

United States Patent [19]
Coughlin et al.
[11] **4,048,018**
[45] * **Sept. 13, 1977**

[54] **METHOD OF CARRYING OUT ENZYME CATALYZED REACTIONS**

[76] Inventors: **Robert W. Coughlin**, 902 Seventh Ave., Bethlehem, Pa. 18018; **Marvin Charles**, 622 N. 29 St., Allentown, Pa. 18104

[*] Notice: The portion of the term of this patent subsequent to Apr. 5, 1994, has been disclaimed.

[21] Appl. No.: **665,300**

[22] Filed: **Mar. 9, 1976**

Related U.S. Application Data

[60] Continuation-in-part of Ser. No. 495,073, Aug. 5, 1974, abandoned, which is a division of Ser. No. 228,748, Feb. 23, 1972, Pat. No. 3,928,143.

[51] **Int. Cl.**[2] **C12B 1/00**

[52] **U.S. Cl.** **195/115**; 195/63; 195/68; 195/127; 195/139

[58] **Field of Search** ..... 195/115, 116, 63, 68, 195/31 F, 31 R, 139, 49, 127

[56] **References Cited**

U.S. PATENT DOCUMENTS

3,519,538 7/1970 Messing et al. 195/68
3,669,841 6/1972 Miller 195/63
3,767,535 10/1973 Havewala et al. 195/63
3,783,101 1/1974 Tomb et al. 195/63
3,791,927 2/1974 Forgione et al. 195/63

OTHER PUBLICATIONS

Barker et al., "Enzyme Reactors for Industry," Process Biochemistry, vol. 6, No. 10, (Oct. 1971), pp. 11–13.
Emery et al., "Some Applications of Solid-Phase Enzymes in Biological Engineering," Birmingham Univ. Chem. Engineer, vol. 22, 1971, pp. 37–45 No. 2 (Summer).

Primary Examiner—Raymond N. Jones
Assistant Examiner—Thomas G. Wiseman

[57] **ABSTRACT**

A liquid stream containing the reactants is passed through a bed of enzyme catalyst, made up of enzymes bonded to small, dense particles of carrier or support materials, in a manner which causes the bed to expand or fluidize and a chemical reaction is thereby carried out in a process that is simultaneously free from limitations due to plugging and excessive pressure drop and which also has the advantage of the high mass transfer rates that can be realized between the liquid and small particles.

13 Claims, No Drawings

United States Patent [19]
Franzmann et al.
[11] **4,271,269**
[45] **Jun. 2, 1981**

[54] **REGENERATION OF AN ENZYME IMMOBILIZATE**

[75] Inventors: **Giselher Franzmann**, Witten; **Hans-Leo Hülsmann**, Wetter, both of Fed. Rep. of Germany

[73] Assignee: **Dynamit Nobel Aktiengesellschaft**, Troisdorf, Fed. Rep. of Germany

[21] Appl. No.: **39,482**

[22] Filed: **May 15, 1979**

[30] **Foreign Application Priority Data**

May 19, 1978 [DE] Fed. Rep. of Germany 2821890

[51] **Int. Cl.**[3] **C12N 11/14**

[52] **U.S. Cl.** **435/176**; 435/106; 435/174

[58] **Field of Search** 435/174, 176, 181, 106

[56] **References Cited**

U.S. PATENT DOCUMENTS

3,519,538 7/1970 Messing et al. 435/176

OTHER PUBLICATIONS

Tosz et al., Studies on Continuous Enzyme Reactions, Agr. Biol. Chem., vol. 33, No. 7, 1969, (pp. 1053–1059).
Messing, R. A., Immobilized Enzymes for Industrial Reactors, Academic Press, N.Y., 1975, (pp. 79–95).
Zaborsky, O., Immobilized Enzymes, CRC Press, Cleveland, Ohio, 1973, (pp. 75–82).

Primary Examiner—David M. Naff
Attorney, Agent, or Firm—Sprung, Felfe, Horn, Lynch & Kramer

[57] **ABSTRACT**

An enzyme immobilizate comprising an amorphous siliceous support to which an enzyme is bonded by adsorption via an amino alkoxy silane is regenerated after the enzyme has become inactive by contacting the immobilizate containing the inactive enzyme with a solution of inorganic ammonium sulfate or a solution of primary, secondary, tertiary or quaternary C_1 to C_6 alkyl or hydroxy alkyl ammonium sulfate to desorb the enzyme and then contacting the support with a fresh enzyme solution to adsorb active enzyme to the support.

6 Claims, No Drawings

United States Patent [19]
Rohrbach et al.
[11] **4,268,423**
[45] **May 19, 1981**

[54] **SUPPORT MATRICES FOR IMMOBILIZED ENZYMES**

[75] Inventors: **Ronald P. Rohrbach**, Forest Lake; **Mary Maliarik**, Lake Forest, both of Ill.

[73] Assignee: **UOP Inc.**, Des Plaines, Ill.

[21] Appl. No.: **95,019**

[22] Filed: **Nov. 16, 1979**

[51] **Int. Cl.**[3] **B01J 31/06**; C12N 11/14; C12N 11/08

[52] **U.S. Cl.** **252/430**; 435/176; 435/180

[58] **Field of Search** 252/430; 435/180–182, 435/174–177; 260/6

[56] **References Cited**

U.S. PATENT DOCUMENTS

4,066,504 1/1978 Krasnobajew et al. 260/6
4,141,857 2/1979 Levy et al. 252/430
4,184,986 1/1980 Krasnobajew et al. 435/180

Primary Examiner—P. E. Konopka
Attorney, Agent, or Firm—James R. Hoatson, Jr.; Raymond H. Nelson; William H. Page, II

[57] **ABSTRACT**

An improved method of preparing support matrices for immobilization of reactive chemical entities, such as enzymes, comprises deposition of a polyamine on a core support, such as an inorganic oxide, contacting the polyamine-coated core support with a bifunctional reagent which cross-links the polyamine and provides pendant functional groups, and recovering the matrix, wherein the improvement comprises deposition of the polyamine as a thin, uniform film from solvents of low surface tension.

7 Claims, 1 Drawing Figure

United States Patent [19]
Hartdegen et al.
[11] **4,195,127**
[45] * **Mar. 25, 1980**

[54] **PROCESS FOR IMMOBILIZING PROTEINS**

[75] Inventors: **Frank J. Hartdegen**, Columbia; **Wayne E. Swann**, Pasadena, both of Md.

[73] Assignee: **W. R. Grace & Co.**, New York, N.Y.

[*] Notice: The portion of the term of this patent subsequent to Jul. 4, 1995, has been disclaimed.

[21] Appl. No.: **851,932**

[22] Filed: **Nov. 16, 1977**

Related U.S. Application Data

[60] Division of Ser. No. 743,035, Nov. 18, 1976, Pat. No. 4,098,645, which is a continuation-in-part of Ser. No. 660,982, Feb. 24, 1976, abandoned, which is a continuation-in-part of Ser. No. 585,674, Jun. 10, 1975, abandoned.

[51] **Int. Cl.**[2] **C07G 7/00**; C07G 7/02
[52] **U.S. Cl.** ..... **435/174**; 260/8; 260/112 R; 435/182

[58] **Field of Search** ..... 195/63, 68, DIG. 11; 260/6, 8, 112 R; 424/78, 85, 94

[56] **References Cited**

U.S. PATENT DOCUMENTS

3,672,955	6/1972	Stanley	195/68
3,905,923	9/1975	Klug	195/63 X
3,975,350	8/1976	Hudgin et al.	424/78 X

FOREIGN PATENT DOCUMENTS

2413137	10/1975	Fed. Rep. of Germany .
953414	3/1964	United Kingdom .

Primary Examiner—David M. Naff
Attorney, Agent, or Firm—Philip M. Pippenger

[57] **ABSTRACT**

A protein which can be an enzyme is immobilized by: (a) admixing the protein and an isocyanate-capped liquid polyurethane prepolymer to form an intermediate product; and (b) foaming the intermediate product by reacting it with water to form a polyurethane foam comprising the immobilized enzyme.

11 Claims, No Drawings

United States Patent [19]
Puls et al.
[11] **4,200,692**
[45] **Apr. 29, 1980**

[54] **PROCESS FOR THE PRODUCTION OF XYLOSE BY ENZYMATIC HYDROLYSIS OF XYLAN**

[75] Inventors: **Jürgen Puls**, Pinneberg; **Michael Sinner**, Dassendorf; **Hans-Hermann Dietrichs**, Reinbek, all of Fed. Rep. of Germany

[73] Assignee: **Projektierung Chemische Verfahrenstechnik GmbH**, Ratingen, Fed. Rep. of Germany

[21] Appl. No.: **836,713**

[22] Filed: **Sep. 26, 1977**

[30] **Foreign Application Priority Data**

Sep. 29, 1976 [DE] Fed. Rep. of Germany 2643800

[51] **Int. Cl.**[2] **C12P 19/14**
[52] **U.S. Cl.** **435/99**; 435/174; 435/176; 435/814

[58] **Field of Search** ..... 195/31 R, 33, 13, 63, 195/68, 115, 116, DIG. 11, 66 R, 62; 435/99, 176, 174, 814

[56] **References Cited**

FOREIGN PATENT DOCUMENTS

7112936	4/1971	Japan	195/31 R
7121788	6/1971	Japan	195/31 R
7215743	5/1972	Japan	195/66 R

OTHER PUBLICATIONS

Puls et al., "Carrier Bound Xylanases", *Chem. Abstracts*, vol. 81, No. 19, (1974), p. 215, Abs. #116603a.
Hashimoto et al., "Fractionation of Subunits in Xylanases from *Trichoderma Viride* with a New Simple Preparative Polyacrylamide Gel Electrophoresis Apparatus", *Agr. Biol. Chem.*, vol. 40, No. 3, (1976), pp. 635–636.
Blatt, "Ultrafiltration for Enzyme Concentration", *Methods in Enzymology*, vol. XXII, Jakoby ed., Academic Press, New York (1971), pp. 39–49.

Primary Examiner—Thomas G. Wiseman
Attorney, Agent, or Firm—Schwartz, Jeffery, Schwaab, Mack, Blumenthal & Koch

[57] **ABSTRACT**

A process for the production of xylose by enzymatic hydrolysis of xylan wherein an aqueous solution containing xylan is treated with a carrier having bonded thereto xylanase enzyme and a carrier having bonded thereto β-xylosidase and, optionally, uronic acid-splitting enzyme.

8 Claims, 3 Drawing Figures

United States Patent [19]
Root et al.
[11] **4,200,690**
[45] **Apr. 29, 1980**

[54] **IMMUNOASSAY WITH MEMBRANE IMMOBILIZED ANTIBODY**

[75] Inventors: **David M. Root**, Bedford; **Francis X. Cole**, Stow, both of Mass.

[73] Assignee: **Millipore Corporation**, Bedford, Mass.

[21] Appl. No.: **924,562**

[22] Filed: **Jul. 14, 1978**

Related U.S. Application Data

[63] Continuation of Ser. No. 751,093, Dec. 16, 1976, abandoned.

[51] **Int. Cl.**[2] **G01N 31/14**; G01N 31/00
[52] **U.S. Cl.** ..... **435/7**; 435/28; 435/29; 435/174; 435/287; 435/288; 23/230 B; 23/915
[58] **Field of Search** ..... 195/103.5 A, 103.5 R, 195/63, 68, DIG. 11, 127, 99; 23/230 B, 915

[56] **References Cited**

U.S. PATENT DOCUMENTS

3,839,153	10/1974	Schuurs et al.	195/103.5 A
3,951,748	4/1976	Devlin	195/103.5 R
4,066,512	1/1978	Lai et al.	195/103.5 A X

Primary Examiner—David M. Naff

[57] **ABSTRACT**

The presence of antigens is detected with a device having an antibody immunochemically reactive with the antigen bound to a first microporous membrane coated with an inert proteinaceous material and an antibody immunochemically non-reactive with the antigen bound to a second microporous membrane coated with an inert proteinaceous material. The device is particularly useful in an immunoassay for an antigen of *Entamoeba histolytica* in unfractionated feces or colon aspirate.

11 Claims, 2 Drawing Figures

United States Patent [19]
Abdullah et al.
[11] **4,226,937**
[45] **Oct. 7, 1980**

[54] **METHOD USING GLUCOAMYLASE IMMOBILIZED ON POROUS ALUMINA**

[75] Inventors: **Mukhtar Abdullah**, Downers Grove; **Frederick C. Armbruster**, LaGrange, both of Ill.

[73] Assignee: **CPC International Inc.**, Englewood Cliffs, N.J.

[21] Appl. No.: **33,913**

[22] Filed: **Apr. 27, 1979**

[51] **Int. Cl.**[2] **C12P 19/20**
[52] **U.S. Cl.** **435/96**
[58] Field of Search ..... 435/96; 127/40, 46 A

[56] **References Cited**

U.S. PATENT DOCUMENTS

4,011,137	3/1977	Thompson et al.	435/96
4,132,595	1/1979	Hebeda et al.	435/96

Primary Examiner—Lionel M. Shapiro
Attorney, Agent, or Firm—Stanley M. Parmerter

[57] **ABSTRACT**

A process for the production of dextrose-containing syrups wherein a deionized starch hydrolyzate is treated with glucoamylase immobilized on porous alumina.

7 Claims, No Drawings

United States Patent [19]

Avrameas et al.

[11] **4,193,982**

[45] **Mar. 18, 1980**

[54] **PROCESS FOR COUPLING BIOLOGICAL SUBSTANCES BY COVALENT BONDS**

[75] Inventors: **Stratis Avrameas**, La Celle Saint Cloud; **Therese M. F. Ternynck**, Paris, both of France

[73] Assignee: **Etablissement DéClaré d'Utilité Publique dit: Institut Pasteur**, Paris, France

[21] Appl. No.: **746,552**

[22] Filed: **Dec. 1, 1976**

[30] **Foreign Application Priority Data**

Dec. 5, 1975 [FR] France 75 37392

[51] **Int. Cl.**[2] **A61K 37/00**; A61K 39/00; C07G 7/00; G01N 31/00

[52] **U.S. Cl.** ..... **424/12**; 23/230 B; 260/112 R; 260/112 B; 260/121; 424/8; 424/11; 424/13; 424/177; 435/174

[58] **Field of Search** ..... 424/8, 11, 12, 13, 177; 260/112 R, 112 B, 112.5, 121; 195/63, 103.5 A; 23/230 B

[56] **References Cited**

U.S. PATENT DOCUMENTS

3,322,634 5/1967 Fulthorpe 424/12

FOREIGN PATENT DOCUMENTS

1257263 12/1971 United Kingdom 424/12

OTHER PUBLICATIONS

Lemieux, Immunochem, vol. 11, 1974 pp. 261–269.
Morrison, Arch. Biochem. & Biophys., vol. 134, 1969 pp. 515–523.
Brandt, Biochim. & Biophys. Acta, vol. 386, 1975 pp. 196–202.

Primary Examiner—Anna P. Fagelson
Attorney, Agent, or Firm—Sprung, Felfe, Horn, Lynch & Kramer

[57] **ABSTRACT**

A process for coupling biological substances by covalent bonds that involves the use of benzoquinone as cross-linking agent in large excess compared with the substance to be activated. The activation reaction is realized in a homogeneous liquid medium. The process makes it possible, for example, to couple antibodies to enzymes for determining or detecting said antibodies.

The process can be used for the determination of antitetanic antibodies in human serum.

13 Claims, No Drawings

United States Patent [19]

Amotz et al.

[11] **3,980,521**

[45] **Sept. 14, 1976**

[54] **IMMOBILIZATION OF GLUCOSE ISOMERASE**

[75] Inventors: **Shmuel Amotz**, Malev; **Tage Kjaer Nielsen**, Herlev; **Niels Otto Thiesen**, Lyngby, all of Denmark

[73] Assignee: **Novo Industri A/S**, Bagsvaerd, Denmark

[22] Filed: **Aug. 28, 1974**

[21] Appl. No.: **501,292**

[52] **U.S. Cl.** ..... **195/68**; 195/31 F; 195/59; 195/63; 195/65; 195/DIG. 11

[51] **Int. Cl.**[2] **C07G 7/02**; C12K 1/00

[58] **Field of Search** ..... 195/31 F, 63, 68, DIG. 11, 195/59, 65, 52

[56] **References Cited**

UNITED STATES PATENTS

3,753,858 8/1973 Takasaki et al. ..... 195/31 F
3,779,869 12/1973 Zienty 195/68
3,821,086 6/1974 Lee et al. ..... 195/31 F
3,843,442 10/1974 Moskowitz ..... 195/31 F

FOREIGN PATENTS OR APPLICATIONS

2,107,801 1972 France

OTHER PUBLICATIONS

Avrameas et al., The Cross-Linking of Proteins With Glutaraldehyde and Its Use For the Preparation of Immuno-adsorbents, Immunochemistry, vol. 6, 1969 (pp. 53–66).

Primary Examiner—David M. Naff
Attorney, Agent, or Firm—Fidelman, Wolffe & Waldron

[57] **ABSTRACT**

A water insoluble glucose isomerase product is prepared from microorganism cells exhibiting glucose isomerase activity by concentrating and homogenizing the microorganism cells to form a homogenized cell concentrate containing ruptured cells, reacting the homogenized concentrate with glutaraldehyde to form a coherent solid product and removing water and shaping the coherent product into a divided form.

11 Claims, 1 Drawing Figure

United States Patent [19]

Richardson

[11] **4,144,131**

[45] **Mar. 13, 1979**

[54] **IMMOBILIZATION OF ENZYMES ON HUMAN TISSUE OR ERYTHROCYTES**

[75] Inventor: **Thomas Richardson**, Madison, Wis.

[73] Assignee: **Wisconsin Alumni Research Foundation**, Madison, Wis.

[21] Appl. No.: **472,588**

[22] Filed: **May 23, 1974**

[51] **Int. Cl.**[2] **C07G 7/02**

[52] **U.S. Cl.** **195/68**; 195/63; 195/DIG. 11; 424/94

[58] **Field of Search** ..... 195/63, 68, DIG. 11; 424/94; 260/112 R

[56] **References Cited**

U.S. PATENT DOCUMENTS

3,639,558 2/1972 Caizmas et al. ..... 195/68 X
3,654,083 4/1972 Moelker ..... 195/68 X
3,691,016 9/1972 Patel 195/68
3,806,417 4/1974 Beaucamp et al. 195/63
3,843,447 10/1974 Burkoth 195/68

Primary Examiner—David M. Naff
Attorney, Agent, or Firm—McDougall, Hersh & Scott

[57] **ABSTRACT**

Enzymes and macromolecules are immobilized in vivo or in vitro on human tissue or erythrocytes by the reaction of the enzyme with a coupling agent to form an enzyme derivative containing electrophilic groups and reacting the enzyme derivative with the tissue or erythrocyte containing a sulfhydryl group or other nucleophilic group.

8 Claims, No Drawings

United States Patent [19]

Lee et al.

[11] **3,989,597**

[45] **Nov. 2, 1976**

[54] **AGGREGATE OF FLOCCULATED CELLS**

[75] Inventors: **Chin K. Lee; Margaret E. Long**, both of Winston-Salem, N.C.

[73] Assignee: **R. J. Reynolds Tobacco Company**, Winston-Salem, N.C.

[22] Filed: **Oct. 14, 1975**

[21] Appl. No.: **621,996**

Related U.S. Application Data

[62] Division of Ser. No. 455,696, March 28, 1974, abandoned, which is a division of Ser. No. 161,337, July 9, 1971, Pat. No. 3,821,086.

[52] **U.S. Cl.** **195/56**; 195/59

[51] **Int. Cl.**[2] **C12B 1/26**; C12K 1/10

[58] **Field of Search** ..... 195/31 F, 68, 63, 65, 195/99, 56, 59, 100, 116; 210/75, 195, 18

[56] **References Cited**

UNITED STATES PATENTS

3,356,609 12/1967 Bruemmer 210/18
3,645,848 2/1972 Lee et al. ..... 195/31 F
3,694,314 9/1972 Lloyd et al. ..... 195/31 F
3,821,086 6/1974 Lee et al. ..... 195/65 X

Primary Examiner—A. Louis Monacell
Assistant Examiner—Thomas A. Wiseman
Attorney, Agent, or Firm—Manford R. Haxton; Herbert J. Bluhm

[57] **ABSTRACT**

Microbial cells having active enzymes associated therewith are subjected to flocculation conditions to produce a flocculated whole cell aggregate that is useful in effecting enzyme-catalyzed chemical transformations. Substrates are brought into contact with the flocculated cell aggregates where they undergo chemical transformations in the presence of active enzymes associated with the cells.

8 Claims, No Drawings

United States Patent [19]
Kaetsu et al.
[11] 4,272,617
[45] Jun. 9, 1981

[54] IMMOBILIZATION OF ENZYMES OR BACTERIA CELLS

[75] Inventors: Isao Kaetsu; Minoru Kumakura; Masaru Yoshida, all of Takasaki, Japan

[73] Assignee: Japan Atomic Energy Research Institute, Tokyo, Japan

[21] Appl. No.: 60,867

[22] Filed: Jul. 26, 1979

Related U.S. Application Data

[63] Continuation of Ser. No. 765,604, Feb. 4, 1977, abandoned.

[30] Foreign Application Priority Data

Feb. 9, 1976 [JP] Japan 51-13083

[51] Int. Cl.[3] C12N 11/04
[52] U.S. Cl. 435/182
[58] Field of Search 435/174, 177, 182, 181

[56] References Cited

U.S. PATENT DOCUMENTS

3,860,490	1/1975	Guttag	435/182
3,871,964	3/1975	Huper et al.	435/181 X
3,957,580	5/1976	Nelson	435/181 X
3,962,038	6/1976	Kamashima et al.	435/182 X
4,025,391	5/1977	Kamashima et al.	435/182
4,177,107	12/1979	Kumakura et al.	435/176
4,193,845	3/1980	Kaetsu et al.	435/182
4,194,066	3/1980	Kaetsu et al.	435/182

FOREIGN PATENT DOCUMENTS

50-78640	2/1975	Japan .
51-26285	2/1976	Japan .

Primary Examiner—David M. Naff
Attorney, Agent, or Firm—Browdy & Neimark

[57] ABSTRACT

Enzymes and/or bacteria cells are immobilized by forming an aqueous mixture of enzymes and/or bacteria cells and a hydrophobic, vitrifiable monomer in an amount of at least 76% by weight of all monomers present, and irradiating the mixture by means of ionizing radiation at a temperature less than −10° C. to polymerize the monomer.

4 Claims, No Drawings

United States Patent [19]
Takasaki
[11] 3,950,222
[45] Apr. 13, 1976

[54] METHOD OF IMMOBILIZING ENZYMES TO MICROBIAL CELLS

[75] Inventor: Yoshiyuki Takasaki, Chiba, Japan

[73] Assignee: Agency of Industrial Science & Technology, Tokyo, Japan

[22] Filed: Mar. 1, 1974

[21] Appl. No.: 447,086

[30] Foreign Application Priority Data

Mar. 7, 1973 Japan 48-27255

[52] U.S. Cl. ..... 195/68; 195/31 R; 195/31 F; 195/56; 195/59; 195/63; 195/64; 195/65; 195/111; 195/DIG. 11
[51] Int. Cl.[2] C12D 13/10; C07G 7/02; C12D 13/02
[58] Field of Search ..... 195/63, 68, 65, 31 F, 31 R, 195/52, 56, 59, 111, DIG. 11

[56] References Cited

UNITED STATES PATENTS

3,553,310	1/1971	Csizmas et al.	195/63
3,779,869	12/1973	Zienty	195/68
3,843,442	10/1974	Moskowitz	195/31 F

OTHER PUBLICATIONS

Hough et al, *Nature* Vol. 235, (Feb., 1972), p. 389.

Zaborsky, *Immobilized Enzymes*, CRC Press, (1973), pp. 10, 11, 64.

Barker et al., "Enzyme Reactors for Industry," *Process Biochemistry*, Vol. 6, No. 10, pp. 11–13.

Emery et al. "Some Applications of Solid-Phase Enzymes in Biological Engineering," *Chem. Engineer, Birmingham University*, Vol. 22, No. 2, pp. 37–45.

Primary Examiner—A. Louis Monacell
Assistant Examiner—Thomas G. Wiseman
Attorney, Agent, or Firm—Ernest G. Montague; Karl F. Ross; Herbert Dubno

[57] ABSTRACT

Microorganic cells or microorganic cells which have undergone various forms of treatments, when treated with a reagent having two or more functional groups, give rise to microorganic cells having one of the functional groups of the said reagent chemically bonded thereto and also retaining a free functional group. Contact of an enzyme with the microorganic cells having a free functional group results in immobilization of the enzyme on the said cells.

6 Claims, No Drawings

United States Patent [19]
Yoshida et al.
[11] 4,226,938
[45] * Oct. 7, 1980

[54] METHOD FOR IMMOBILIZING ENZYMES

[75] Inventors: Masaru Yoshida; Minoru Kumakura; Isao Kaetsu, all of Takasaki, Japan

[73] Assignee: Japan Atomic Energy Research Institute, Tokyo, Japan

[*] Notice: The portion of the term of this patent subsequent to Dec. 4, 1996, has been disclaimed.

[21] Appl. No.: 944,444

[22] Filed: Sep. 21, 1978

Related U.S. Application Data

[63] Continuation of Ser. No. 706,329, Jul. 19, 1976, abandoned.

[30] Foreign Application Priority Data

Jul. 23, 1975 [JP] Japan 50-89207
Jul. 23, 1975 [JP] Japan 50-89209

[51] Int. Cl.[3] C12N 11/14
[52] U.S. Cl. 435/176; 435/177; 435/178; 435/179; 435/182
[58] Field of Search ..... 195/63, 68, DIG. 11; 435/176, 182

[56] References Cited

U.S. PATENT DOCUMENTS

3,788,950	1/1974	Hicks et al.	195/DIG. 11 X
3,838,007	9/1974	Van Velzen	195/DIG. 11 X
3,859,169	1/1975	O'Driscoll et al.	195/63
3,860,490	1/1975	Guttag	195/108
3,933,587	1/1976	Maeda et al.	195/68
3,962,038	6/1976	Kawashima et al.	195/68
4,025,391	5/1977	Kawashima et al.	195/68

FOREIGN PATENT DOCUMENTS

50-78640	2/1975	Japan .
51-26285	2/1976	Japan .

Primary Examiner—Lionel M. Shapiro
Attorney, Agent, or Firm—Ladas & Parry

[57] ABSTRACT

Enzymes are adsorbed on an adsorbent powder in an aqueous medium and a water-miscible monomer is added thereto, and said monomer is polymerized to form a porous gel lump through which a substrate solution can freely pass. The thus formed enzyme composition has long-lasting activity and thus the enzymes can be easily separated from the reaction system and can be used repeatedly.

9 Claims, No Drawings

United States Patent [19]
Lee
[11] 4,248,969
[45] Feb. 3, 1981

[54] REGENERATION OF A IMMOBILIZED ENZYME SYSTEM

[75] Inventor: Gene K. Lee, La Grange Park, Ill.

[73] Assignee: UOP Inc., Des Plaines, Ill.

[21] Appl. No.: 68,804

[22] Filed: Aug. 22, 1979

[51] Int. Cl.[3] C12M 11/14; C12M 11/08; C12M 11/06; B01J 31/40
[52] U.S. Cl. 435/176; 252/412; 435/180; 435/181
[58] Field of Search 252/412, 414, 430, 428; 435/180–182, 174–177

[56] References Cited

U.S. PATENT DOCUMENTS

3,761,357	9/1973	Epton	435/181
3,836,433	9/1974	Wirth et al.	435/181
3,959,080	5/1976	Orth et al.	435/181
4,141,857	2/1979	Levy et al.	252/430

Primary Examiner—P. E. Konopka
Attorney, Agent, or Firm—James R. Hoatson, Jr.; Raymond H. Nelson; William H. Page, II

[57] ABSTRACT

A method for regenerating an immobilized enzyme system comprises treating the deactivated system with a base, removing excess base, treating the system with a bifunctional organic reagent which furnishes a pendant group, removing excess of said bifunctional reagent, and immobilizing fresh, active enzyme.

7 Claims, 1 Drawing Figure

TISSUE CULTURE

This profile includes processes, compositions and media for the in vitro propagation or maintenance of undifferentiated plant or animal cells, i.e., cell lines that are not organized tissue. The culture of cell lines may be on a surface or in suspension. Also included are apparatus adapted for the growth of differentiated or undifferentiated animal or plant cells, tissue or viruses.

INCLUDED IN THIS PROFILE ARE ALL OF THE PATENTS FROM:

Class 435, Subclasses 240, 241, 284, 285, 286

ACTIVITY INDICES (1979-1981)

GROWTH	36.0%
FOREIGN SHARE	24.7%
CORPORATE OWNED	76.6%
GOVERNMENT OWNED	9.1%
U.S. OWNED OF FOREIGN	10.5%

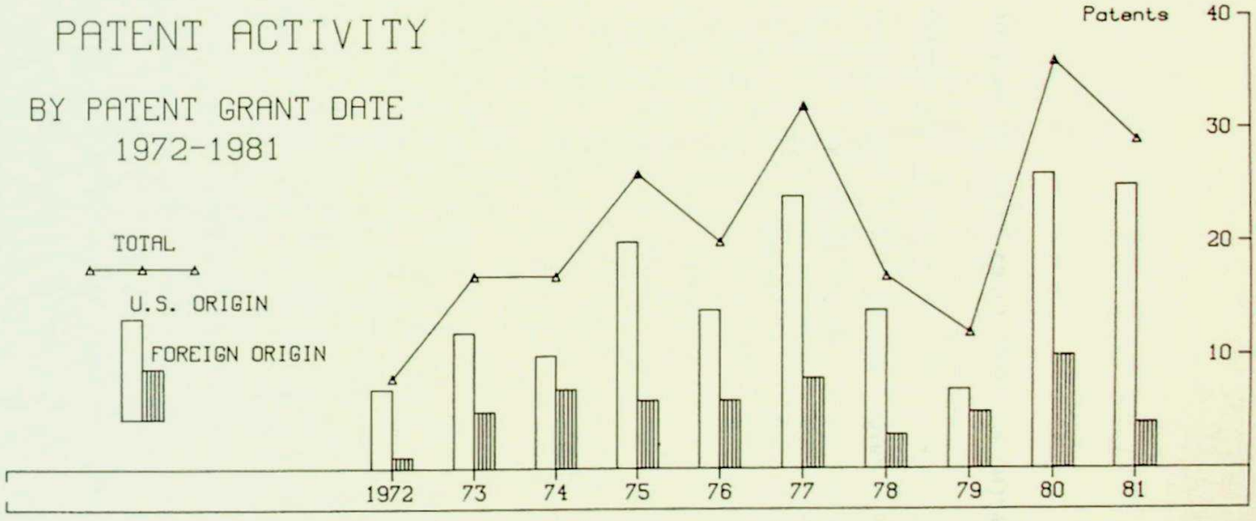

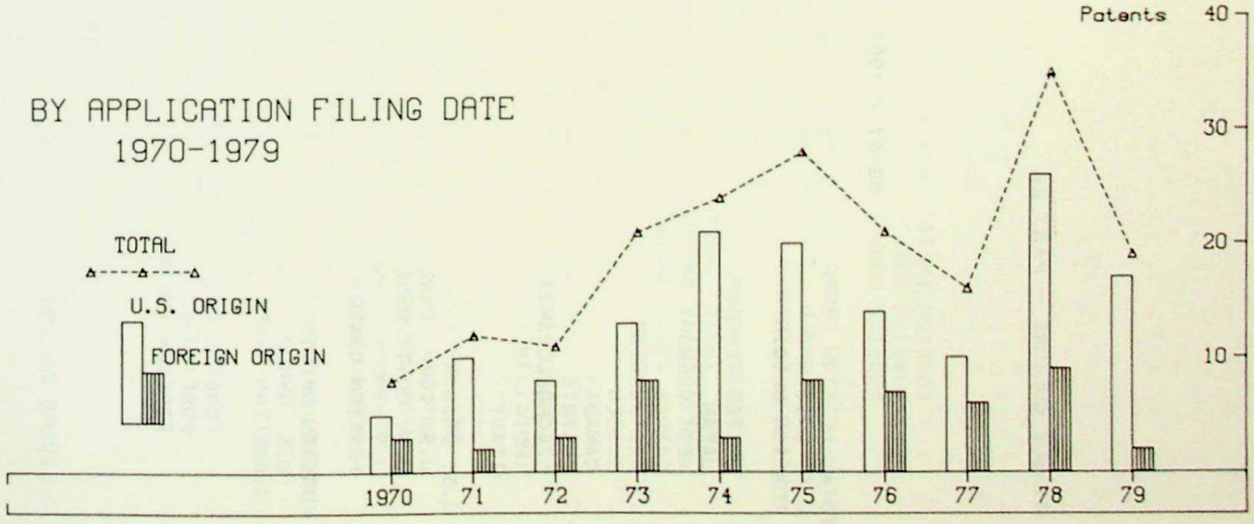

TISSUE CULTURE - PART 2A

PATENT ACTIVITY (1/63-12/81) BY DATE OF PATENT GRANT

	NUMBER OF PATENTS															
	63-67	1968	1969	1970	1971	1972	1973	1974	1975	1976	1977	1978	1979	1980	1981	TOTAL
TOTAL	19	5	8	7	8	8	17	17	26	20	32	17	12	36	29	261
U.S. ORIGIN	14	2	8	4	7	7	12	10	20	14	24	14	7	26	25	194
FOREIGN ORIGIN	5	3		3	1	1	5	7	6	6	8	3	5	10	4	67
UNITED KINGDOM	2	2		2			1	4	1	1	2	1	1	2	1	20
JAPAN				1	1				1	2	1	1	1	4		12
WEST GERMANY	1							1	2	1			1	1	2	9
FRANCE							1		1		4					6
SWITZERLAND							1	1	1	1				1		5
SWEDEN	1							1		1	1			1		5
CANADA		1				1	1						1	1		5
AUSTRIA													1		1	2
CZECHOSLOVAKIA	1															1
INDIA												1				1
ITALY							1									1
U.S. ORIGIN	14	2	8	4	7	7	12	10	20	14	24	14	7	26	25	194
U.S. CORP. OWNED	12	2	7	3	5	7	7	7	16	10	19	13	3	20	18	149
U.S. GOVT. OWNED			1		1		1	2	1		3		1	3	2	15
U.S. INDIV. OWNED	2			1	1		3	1	3	4	2	1	2	3	5	28
FOREIGN OWNED							1						1			2
FOREIGN ORIGIN	5	3		3	1	1	5	7	6	6	8	3	5	10	4	67
U.S. OWNED				1	1		1	2		2	1	2		2		12
FOREIGN OWNED	5	3		2		1	4	5	6	4	7	1	5	8	4	55
FOREIGN CORP.	2	3		2		1	2	3	5	4	6	1	5	8	2	44
FOREIGN GOVT.															1	1
FOREIGN INDIV.	3						2	2	1		1				1	10

TISSUE CULTURE

PATENT ACTIVITY (PATENTS GRANTED 1/67-12/81) BY DATE OF PATENT APPLICATION

	NUMBER OF PATENTED APPLICATIONS															
	PRE 68	1968	1969	1970	1971	1972	1973	1974	1975	1976	1977	1978	1979	1980	1981	TOTAL
TOTAL	22	6	9	8	12	11	21	24	28	21	16	35	19	11		243
U.S. ORIGIN	16	5	6	5	10	8	13	21	20	14	10	26	17	10		181
FOREIGN ORIGIN	6	1	3	3	2	3	8	3	8	7	6	9	2	1		62
UNITED KINGDOM	4		1		1	1	2	2	1	2	2	1	1			18
JAPAN	1	1					1	1	1	3		4				12
WEST GERMANY				1		1	1		1		1	2		1		8
FRANCE				1			1		3	1						6
SWITZERLAND						1	2		1			1				5
SWEDEN					1		1		1				1			4
CANADA	1		2								2					5
AUSTRIA											1	1				2
CZECHOSLOVAKIA																
INDIA										1						1
ITALY				1												1
U.S. ORIGIN	16	5	6	5	10	8	13	21	20	14	10	26	17	10		181
U.S. CORP. OWNED	12	4	4	4	9	5	9	16	16	13	6	19	14	6		137
U.S. GOVT. OWNED	1		1		1	2	1	1	2		1	3	1	1		15
U.S. INDIV. OWNED	3	1	1	1			3	4	2	1	3	3	2	3		27
FOREIGN OWNED						1						1				2
FOREIGN ORIGIN	6	1	3	3	2	3	8	3	8	7	6	9	2	1		62
U.S. OWNED	1	1	1		1		1	1	2	2	1	1				12
FOREIGN OWNED	5		2	3	1	3	7	2	6	5	5	8	2	1		50
FOREIGN CORP.	5		2	1	1	2	5	2	6	4	5	8	1			42
FOREIGN GOVT.													1			1
FOREIGN INDIV.				2		1	2			1				1		7

TISSUE CULTURE

Organizational Patenting: Ranked

NO. OF PATENTS	ASSIGNEES WITH 2 OR MORE PATENTS (1969-1981)
19	MONSANTO CO.
16	MERCK & CO., INC.
10	MASSACHUSETTS INSTITUTE OF TECHNOLOGY
7	BURROUGHS WELLCOME CO.
6	UNITED STATES OF AMERICA, HEALTH, EDUCATION AND WELFARE
5	UNITED STATES OF AMERICA
4	HOFFMANN-LA ROCHE, INC.
4	OLYMPUS OPTICAL CO., LTD.
3	AB KABI
3	AMERICAN CYANAMID CO.
3	BEECHAM GROUP LTD.
3	CHEMAP AG
3	DOW CHEMICAL CO.
3	FLOW LABORATORIES, INC.
3	INSTRUMENTATION LABORATORY, INC.
3	MILES LABORATORIES INC.
3	NATIONAL RESEARCH DEVELOPMENT CORP.
3	UNIVERSITY OF MINNESOTA, THE REGENTS OF
3	WISTAR INSTITUTE
2	ABBOTT LABORATORIES
2	AMERICAN HOME PRODUCTS CORP.
2	BECTON, DICKINSON AND CO.
2	CALIFORNIA INSTITUTE OF TECHNOLOGY
2	CORNELL RESEARCH FOUNDATION INC.
2	DATA PACKAGING CORP.
2	DUKE UNIVERSITY INC.
2	ELI LILLY AND CO.
2	GODO SHUSEI KABUSHIKI KAISHA
2	GTE LABORATORIES INC.
2	MAX-PLANCK-GESELLSCHAFT ZUR FORDERUNG DER WISSENSCHAFTEN E.V.
2	MICROBIOLOGICAL ASSOCIATES, INC.
2	RESEARCH CORP.
2	SLOAN-KETTERING INSTITUTE FOR CANCER RESEARCH
2	UNITED STATES OF AMERICA, NAVY
2	UPJOHN CO.
2	VIRTIS CO., INC.
2*	INSTITUT ARMAND FRAPPIER

*Composite Total. See Appendix A.

ORGANIZATIONAL PATENTING (1/69-12/81) - - ALPHA LISTING

AB BIOTEC
3853711 - INSTALLATION FOR AUTOMATION OF MICROBIOLOGICAL WORK TECHNIQUES

ABBOTT LABORATORIES
3843454 - FLOW THROUGH TISSUE CULTURE PROPAGATOR
3930944 - UROKINASE PRODUCTION

AB KABI
3953290 - POLYPEPTIDES AS VITRO ACTIVE CELL GROWTH ENHANCING FACTORS AND METHODS OF USE
4058512 - SYNTHETIC PEPTIDES HAVING GROWTH PROMOTING ACTIVITY
4235772 - NOVEL PEPTIDES HAVING GROWTH PROMOTING ACTIVITY

AGENCE NATIONALE DE VALORISATION DE LA RECHERCHE (ANVAR)
4003156 - PROCESS FOR OBTAINING VARIANTS OF PLANTS WITH IMPROVED CHARACTERISTICS

ALLIED CHEMICAL CORPORATION
3743480 - STERILIZATION OF BIOLOGICAL FLUIDS

ALZA CORPORATION
3730835 - NOVEL DEVICE COATED WITH A PROSTAGLANDIN AND PREPARATION THEREOF

AMERICAN CYANAMID COMPANY
3420743 - HARVESTING BIOLOGICALS FROM EGGS
3468520 - COMBINATION AGITATION AND TRANSFER UNIT FOR SUSPENDED CELLS
3702605 - CELL DISPERSAL METHOD FOR MONKEY KIDNEY TISSUE

AMERICAN HOME PRODUCTS CORPORATION
3432391 - ATTENUATED INFECTIOUS VACCINE AND METHOD OF PRODUCING SAME
3882233 - METHODS OF INCREASING PRODUCTION OF PITUITARY HORMONES

BATTELLE-INSTITUTE E.V.
4225671 - PROCESS FOR THE IN-VITRO BIOSYNTHESIS OF HORMONES, ESPECIALLY INSULIN

BAXTER TRAVENOL LABORATORIES, INC.
4229541 - IN VITRO CULTIVATION OF HORSESHOE CRAB AMEBOCYTES

BECTON, DICKINSON AND COMPANY
4238568 - ROLLER BOTTLE
4283495 - ROLLER BOTTLE

BEECHAM GROUP LIMITED
3838003 - PROCESSES FOR THE CULTIVATION OF FUNGI
4144126 - CELL CULTURE METHOD
4224413 - CELL CULTURE METHOD

BEHRINGWERKE AKTIENGESELLSCHAFT
3886270 - INTRAVENOUSLY TOLERATED ANTI-DISTEMPER AND ANTI-HEPATITIS VACCINE, ITS PREPARATION AND ITS USE FOR IMMUNIZATION

BIO-RESPONSE, INC.
4064006 - METHOD FOR THE CONTINUOUS MASS IN VITRO SUSPENSION CULTURE OF CELLS

BRITISH PETROLEUM COMPANY LIMITED
3816960 - METHOD FOR GROWING PLANTS

BURROUGHS WELLCOME CO.
3520972 - FELINE VIRUS VACCINES OBTAINED BY PROPAGATION AND SERIAL PASSAGE ATTENUATION OF VIRULENT FELINE VIRUSES IN DIPLOID FELIN
E EMBRYO TISSUE CELL SERIAL PASSAGE SUBCULTURE STRAINS

ORGANIZATIONAL PATENTING (1/69-12/81) - - ALPHA LISTING

(CONTINUED)

BURROUGHS WELLCOME CO.
3709782 - HETEROPLOID CELL LINES
3827943 - CULTURE APPARATUS
3935066 - CELL LINES
4021302 - CELL CULTURES
4085203 - PROCESS FOR PREPARING VACCINE
4203801 - CELL AND VIRUS CULTURE SYSTEMS

CALIFORNIA INSTITUTE OF TECHNOLOGY
3910819 - TREATMENT OF SURFACES TO STIMULATE BIOLOGICAL CELL ADHESION AND GROWTH
4013507 - IONENE POLYMERS FOR SELECTIVELY INHIBITING THE VITRO GROWTH OF MALIGNANT CELLS

CANADIAN PATENTS AND DEVELOPMENT LIMITED
3647633 - APPARATUS FOR THE CONTINUOUS PHASED CULTURING OF CELLS

CETUS CORPORATION
4262090 - INTERFERON PRODUCTION

CHEMAP AG
4173516 - DEVICE FOR CULTIVATING CELLS OF ANIMAL AND HUMAN TISSUES
4228242 - ARRANGEMENT FOR CULTIVATING CELLS OF ANIMAL AND HUMAN TISSUES
4259449 - METHOD OF CULTIVATING CELLS OF ANIMAL AND HUMAN TISSUES

CHOAY S.A.
4017361 - PROCESS FOR OBTAINING CONTINUOUS LINES OF TUMORAL CELLS IN VITRO

CONNAUGHT LABORATORIES LIMITED
3769415 - METHOD OF PREPARING A KILLED VACCINE FOR ORAL USE

CORNELL RESEARCH FOUNDATION INC.
3783098 - HIGHLY POTENT, VIABLE AND STABLE CELL-FREE VIRUS PREPARATIONS FROM CELLS INFECTED WITH CELL-ASSOCIATED VIRUSES AND METHO
D FOR OBTAINING THE SAME
4306022 - COCOA BEAN CELL CULTURE

CROWN ZELLERBACH CORPORATION
3551554 - ENHANCING TISSUE PENETRATION OF PHYSIOLOGICALLY ACTIVE AGENTS WITH DMSO

CURATORS OF THE UNIVERSITY OF MISSOURI
3941661 - ROLLER CULTURE BOTTLE INSERT

CUTTER LABORATORIES INC.
4112068 - CANINE LUNG CELL STRAIN CULTURE SYSTEMS AND PROCESSES FOR THE CULTIVATION OF VIRUSES AND VACCINES THEREFROM

DATA PACKAGING CORPORATION
4012288 - TISSUE CULTURE CLUSTER DISH
4073695 - LEIGHTON TUBE

DESIGN ALLIANCE, INC.
3955421 - PERIPHYTON SAMPLER FOR WATER QUALITY MONITORING

DOW CHEMICAL COMPANY
3585266 - LIVE RABIES VIRUS VACCINE AND METHOD FOR THE PRODUCTION THEREOF
3887430 - CULTURE MEDIUM FOR TISSUE CULTURE TECHNIQUES
4072565 - PRODUCTION OF VIRUSES IN TISSUE CULTURE WITHOUT USE OF SERUM

ORGANIZATIONAL PATENTING (1/69-12/81) - - ALPHA LISTING

DR. RENTSCHLER ARZNEIMITTEL GMBH & CO.
4172013 - PROCESS FOR THE MASS GROWTH OF CELLS AND SYSTEM OF CHAMBERS FOR THE CARRYING OUT THEREOF

DUKE UNIVERSITY INC.
3847749 - APPARATUS AND METHOD FOR RAPID HARVESTING OF ROLLER CULTURE SUPERNATANT FLUID
3893887 - METHOD FOR RAPID HARVESTING OF ROLLER CULTURE SUPERNATANT FLUID

DYNASCIENCES CORPORATION
4198482 - RAPID ASPIRATION SYSTEM FOR CULTURE MEDIA

EASTMAN KODAK COMPANY
4232121 - PROCESS FOR SELECTING METHINE DYES WHICH INHIBIT CELL GROWTH

E. I. DU PONT DE NEMOURS AND COMPANY
3704546 - SYMBIOTIC FIXATION OF ATMOSPHERIC NITROGEN

ELI LILLY AND COMPANY
3850748 - METHOD OF PRODUCING ANIMAL CELLS IN SUSPENSION CULTURE
3904480 - ENHANCED PRODUCTION OF PLASMINOGEN ACTIVATOR

FLORIDA INSTITUTE OF TECHNOLOGY
4098646 - METHOD OF IN VITRO CULTIVATION OF PATHOGENIC ORGANISMS OF <I TREPONEMA PALLIDUM <B AND MEDIUM THEREFOR

FLOW LABORATORIES INC.
3450598 - METHOD FOR CELL PROPAGATION
3553312 - PROCESS FOR PRODUCING RUBELLA-VIRUS HEMAGGLUTINATING ANTIGEN
3579423 - PREPARATION OF TISSUE CULTURE MEDIA

FRAUNHOFER-GESELLSCHAFT ZUR FORDERUNG DER ANGEWANDTEN FORSCH
4243692 - PROCESS FOR THE PRODUCTION OF SILICIC ACID HETEROPOLYCONDENSATES USEFUL AS COATING MATERIALS

FUMITAKE YOSHIDA
3870470 - BUBBLE-TYPE BLOOD OXYGENATOR WITH BAFFLES

G. D. SEARLE & CO.
4038139 - CELL CULTURE MEDIUM

GODO SHUSEI KABUSHIKI KAISHA
3930954 - NEUTRAL PROTEASE USEFUL FOR ANIMAL TISSUE AND CELL CULTURE
3948725 - NEUTRAL PROTEASE USEFUL FOR ANIMAL TISSUE AND CELL CULTURE

GRAVI MECHANICS CO.
3911619 - SEED SPROUTER AND INSERT THEREFOR

GREEN CROSS CORPORATION
4186253 - PERFUSATE FOR PRESERVING ORGAN TO BE TRANSPLANTED AND PRESERVING METHOD

GTE LABORATORIES INCORPORATED
4038778 - TISSUE CULTURE TECHNIQUE FOR ASEXUAL PLANT REPRODUCTION AND A MEDIUM FOR USE THEREWITH
4052817 - PROCESS FOR STORING AND RECOVERING PLANT TISSUE

HOFFMANN-LA ROCHE INC.
3668075 - GROWTH INHIBITIONS OF SELECTIVE MYCOPLASMAS
3865689 - METHOD OF PRODUCING CARCINOEMBRYONIC ANTIGENS
3988205 - OPTICALLY ACTIVE CYCLOHEXANE DERIVATIVES
4241174 - INTERFERON ASSAY

ORGANIZATIONAL PATENTING (1/69-12/81) - - ALPHA LISTING

IMPERIAL CHEMICAL INDUSTRIES LIMITED
3503665 - CELL CULTURE SLIDES

INSTITUT ARMAND FRAPPIER
4144136 - APPARATUS FOR CELLULAR CULTURE

INSTITUTE FOR CANCER RESEARCH
3690310 - METHOD OF BIOASSAY OF FERTILITY AND CONTRACEPTIVE DRUGS

INSTITUT MERIEUX
4169761 - PROCESS FOR THE CULTIVATION OF VIRUSES

INSTITUT NATIONAL DE LA SANTE ET DE LA RECHERCHE MEDICALE
4064007 - PROCESS FOR OBTAINING AN ACTIVE PRODUCT FROM MAMMALIAN MACROPHAGES

INSTRUMENTATION LABORATORY, INC.
3887436 - CELL CULTURING SYSTEM
3948732 - CELL CULTURE ASSEMBLY
4033825 - CELL CULTURE SYSTEM

INTECH CORPORATION
3898045 - BLOOD OXYGENATOR

JOHNSON + JOHNSON
4055466 - CULTURE MEDIUM FOR TISSUE CULTURE TECHNIQUES

KITASATO INSTITUTE TOKYO, JAPAN
3492201 - METHOD OF ATTENUATION OF HOG CHOLERA VIRUS

LIMBRO CHEMICAL CO., INC.
3862886 - STERILE PLATE COMPONENT PACKAGE FOR CULTURE GROWING APPARATUS

L'INSTITUT ARMAND-FRAPPIER
4211843 - STRAIN OF MEASLES VIRUS AND PROCESS OF PRODUCING THE SAME

MARTIN-MARIETTA CORPORATION
3769176 - APPARATUS AND METHOD FOR MICROBIAL FERMENTATION IN A ZERO GRAVITY ENVIRONMENT

MASSACHUSETTS GENERAL HOSPITAL
4271145 - PROCESS FOR PRODUCING ANTIBODIES TO HEPATITIS VIRUS AND CELL LINES THEREFOR

MASSACHUSETTS INSTITUTE OF TECHNOLOGY
3884758 - TRIGLYCERIDE-ACCUMULATING CLONAL CELL LINE
3926723 - METHOD OF CONTROLLABLY RELEASING GLUCOSE TO A CELL CULTURE MEDIUM
4003789 - TRIGLYCERIDE-ACCUMULATING CLONAL CELL LINE
4016036 - PROCESS FOR SERIALLY CULTURING KERATINOCYTES
4036693 - TREATMENT OF CELL CULTURE MICROCARRIES
4066510 - ASSAY FOR MUTAGENESIS IN DIPLOID HUMAN LYMPHOBLASTS
4189534 - CELL CULTURE MICROCARRIERS
4293654 - CELL CULTURE MICROCARRIERS
4302535 - ASSAY FOR MUTAGENESIS IN HETEROZYGOUS DIPLOID HUMAN LYMPHOBLASTS
4304866 - TRANSPLANTABLE SHEETS OF LIVING KERATINOUS TISSUE

MAX-PLANCK-GESELLSCHAFT ZUR FORDERUNG DER WISSENSCHAFTEN E.V
3873423 - METHOD FOR CULTURING CELLS
3941662 - APPARATUS FOR CULTURING CELLS

ORGANIZATIONAL PATENTING (1/69-12/81) - - ALPHA LISTING

MEDITECH ENERGY AND ENVIRONMENTAL CORPORATION
3692648 - PROCESS FOR OXYGENATING BLOOD AND APPARATUS FOR CARRY OUT SAME

MERCK + CO., INC.
3616262 - APPARATUS AND METHOD FOR PROPAGATING VIRUSES IN THE EXTRA-EMBRYONIC FLUIDS OF EGGS
3839155 - CELL AND VACCINE PRODUCTION
3875000 - CELL CULTURE APPARATUS
3905865 - CELL AND VACCINE PRODUCTION
3933585 - PROCESS FOR PRODUCTION OF VACCINES
3965258 - PROCESS FOR PRODUCTION OF VACCINES
3976547 - CELL AND VACCINE PRODUCTION
4004981 - CELL REMOVING DEVICE
4010071 - CLARIFICATION OF XANTHAN GUM
4065359 - CELL REMOVING DEVICE
4080258 - CELL AND VACCINE PRODUCTION
4237033 - PRETREATMENT OF MICROCARRIERS FOR CELL CULTURE
4242457 - AUTOMATED VIRUS HARVESTING
4264739 - SPARGER FOR CELL CULTURE SYSTEM
4296204 - USE OF MOTIONLESS MIXER AS CELL CULTURE PROPAGATOR
4301250 - METHOD OF PRODUCING HEPATITIS B SURFACE ANTIGEN

MICROBIOLOGICAL ASSOCIATES, INC.
3429867 - SERUM SUBSTANTIALLY FREE FROM GAMMA GLOBULIN AND METHOD OF PREPARING SAME
3649464 - ASSAY AND CULTURE TRAY

MILES LABORATORIES INC.
3726764 - MICROBIOLOGICAL CHAMBER APPARATUS
3726767 - MICROBIOLOGICAL REACTION CHAMBER APPARATUS
3745091 - BIOLOGICAL REACTION CHAMBER APPARATUS

MONSANTO COMPANY
3997396 - METHOD FOR THE IN VITRO PROPAGATION AND MAINTENANCE OF CELLS
4024020 - METHOD OF CELL CULTURE ON POLYACRYLONITRILE SURFACE
4059485 - ADAPTATION OF CELL LINES TO SUSPENSION CULTURE
4059486 - CELL CULTURE PROCESS
4087327 - MAMMALION CELL CULTURE PROCESS
4166768 - CONTINUOUS CELL CULTURE SYSTEM
4178209 - CONTINUOUS CELL CULTURE METHOD AND APPARATUS
4184916 - CONTINUOUS CELL CULTURE SYSTEM
4201845 - CELL CULTURE REACTOR
4209587 - PRODUCTION OF TUMOR ANGIOGENESIS FACTOR BY CELL CULTURE
4210718 - PRODUCTION OF TUMOR ANGIOGENESIS FACTOR BY CELL CULTURE
4210719 - PRODUCTION OF TUMOR ANGIOGENESIS FACTOR BY CELL CULTURE
4225670 - PRODUCTION OF TUMOR ANGIOGENESIS FACTOR BY CELL CULTURE
4229531 - PRODUCTION OF TUMOR ANGIOGENESIS FACTOR BY CELL CULTURE
4229532 - PRODUCTION OF TUMOR ANGIOGENESIS FACTOR BY CELL CULTURE
4266032 - METHOD OF CULTURING MICROCARRIER SUPPORTED CELLS
4268629 - PRODUCTION OF ANGIOGENIC FACTOR BY CELL CULTURE
4273871 - PRODUCTION OF ANGIOGENIC FACTOR BY CELL CULTURE
4289854 - CELL CULTURE METHOD AND APPARATUS

NATIONAL RESEARCH DEVELOPMENT CORPORATION
3853712 - CELL CULTURE SYSTEMS
3871954 - CELL LINES AND VIRUS CULTURE
4304865 - HARVESTING MATERIAL FROM MICRO-CULTURE PLATES

ORGANIZATIONAL PATENTING (1/69-12/81) - - ALPHA LISTING

NEW BRUNSWICK SCIENTIFIC CO., INC.
3506541 - APPARATUS AND METHOD FOR CULTIVATING CELLS, TISSUES AND THE LIKE

NEW YORK UNIVERSITY
4307082 - METHOD FOR THE EXTRACTION OF A FACTOR THAT MEDIATES CONTACT INHIBITION OF CELL GROWTH

NORDEN LABORATORIES, INC.
3616203 - VIRUS CULTURE AND METHOD

OHIO STATE UNIVERSITY
3432595 - MELANOMA CELL LINE OF CANINE ORIGIN, ITS PROPAGATION AND USE, AND VACCINES DERIVED THERE- FROM

OLYMPUS OPTICAL CO., LTD.
4090921 - AUTOMATIC CULTIVATING APPARATUS
4154652 - METHOD FOR AUTOMATICALLY AND SUCCESSIVELY CULTIVATING TISSUES OR CELLS OF A BODY
4198483 - PIPETTE EXCHANGE APPARATUS
4208484 - APPARATUS FOR HANDLING CENTRIFUGE TUBES IN AUTOMATIC CULTURE SYSTEM

PARKE DAVIS + COMPANY
3486982 - APPARATUS FOR HARVESTING LIQUID VIRAL PRODUCTS FROM EGGS

PIKTOR LIMITED
4001080 - PRODUCTION OF IMMUNOLOGICAL MATERIALS

PRESIDENT AND FELLOWS OF HARVARD COLLEGE
4217412 - PRODUCTION OF TUMOR ANGIOGENESIS FACTOR BY CELL CULTURE

REGENTS OF UNIVERSITY OF MINNESOTA
4288546 - PROCESS FOR THE LARGE SCALE PRODUCTION OF PITUITARY HORMONES BY SERIAL SECONDARY SUSPENSION CULTURE

RESEARCH CORPORATION
3616202 - CULTURE OF ANAPLASMA MARGINALE
3843324 - METHOD OF CELL FRACTIONATION AND APPARATUS THEREFOR

RHONE-POULENC S.A.
3927981 - MEMBRANE-TYPE BLOOD OXYGENATOR WITH RECYCLE OF OXYGEN-CONTAINING GAS

RICHARDSON-MERRELL INC.
3900558 - METHOD OF MEASURING HISTAMINE RELEASE FROM MAST CELLS

RUSH-PRESBYTERIAN-ST. LUKE'S MEDICAL CENTER
4042457 - PREPARATION OF TISSUE INVASION INHIBITOR AND METHOD OF TREATMENT UTILIZING THE INHIBITOR

SANFAR LABORATORIES, INC.
3862002 - PRODUCTION OF PHYSIOLOGICALLY ACTIVE PLACENTAL SUBSTANCES

SLOAN-KETTERING INSTITUTE FOR CANCER RESEARCH
4254226 - PROCESS FOR GROWING HUMAN EPIDERMAL CELLS IN TISSUE CULTURE
4299819 - PROCESS FOR TREATING BURN VICTIMS

SMITHKLINE CORPORATION
3740321 - CELL PROPAGATOR

SOCIETA FARMACEUTICI ITALIA S.P.A.
3732149 - APPARATUS FOR THE LARGE SCALE GROWTH OF LIVING CELLS

ORGANIZATIONAL PATENTING (1/69-12/81) - - ALPHA LISTING

STRATEGIC MEDICAL RESEARCH CORPORATION
4017608 - THERAPEUTIC COMPOSITION AND METHOD OF THERAPEUTICALLY TREATING WARM BLOODED ANIMALS THEREWITH

SYNTEX (U.S.A) INC.
4070453 - DIPLOID PORCINE EMBRYONIC CELL STRAINS, CULTURES PRODUCED THEREFROM, AND USE OF SAID CULTURES FOR PRODUCTION OF VACCINES

TORAY INDUSTRIES INC.
4228243 - CELL CULTURE PROPAGATION APPARATUS

UNITED STATES OF AMERICA, AGRICULTURE
4049494 - VACCINE PRODUCTION PROCESS

UNITED STATES OF AMERICA, ARMY
3445340 - ROTOR CHAMBER INSERT

UNITED STATES OF AMERICA HEALTH EDUCATION AND WELFARE, MESNE
3628287 - PRODUCTION OF DIOSGENIN BY PLANT TISSUE CULTURE TECHNIQUE
3726597 - CONTROLLED ENVIRONMENT CULTURE SYSTEM FOR LIGHT MICROSCOPY
3821087 - CELL CULTURE ON SEMI-PERMEABLE TUBULAR MEMBRANES
3883393 - CELL CULTURE ON SEMI-PERMEABLE TUBULAR MEMBRANES
4148888 - 3-DEAZAADENOSINE AS AN INHIBITOR OF ADENOSYLHOMOCYSTEINE HYDROLASE WITH ANTIVIRAL ACTIVITY
4247646 - LABORATORY APPARATUS FOR CLONING MAMMALIAN CELLS

UNITED STATES OF AMERICA, NAVY
3851246 - METHOD OF PREDICTING THE POST TRANSFUSION VIABILITY OF PRESERVED ERYTHROCYTES AND OTHER SIMILAR CELLS
4018911 - METHOD FOR LARGE VOLUME FREEZING AND THAWING OF PACKED ERYTHROCYTES

UNITED STATES OF AMERICA
4040905 - SUB-HUMAN PRIMATE DIPLOID CELL LINES AS SUBSTRATES FOR VIRUS VACCINE PRODUCTION
4184922 - DUAL CIRCUIT, WOVEN ARTIFICIAL CAPILLARY BUNDLE FOR CELL CULTURE
4220725 - CAPILLARY CELL CULTURE DEVICE
4241187 - METHOD AND APPARATUS FOR CELL AND TISSUE CULTURE
4296206 - IRREVERSIBLE ANTI-GLUCOCORTICOIDS

UNIVERSITY OF CALIFORNIA, THE REGENTS OF
3520081 - METHOD FOR GROWING ALGAE

UNIVERSITY OF ILLINOIS FOUNDATION
3934369 - VITRO NET BIOXYNTHESIS OF CHLOROPHYLL AND GRANA

UNIVERSITY OF KENTUCKY RESEARCH FOUNDATION
4083958 - INACTIVATED EQUINE RHINOPNEUMONITIS VIRUS VACCINE AND USE THEREOF

UNIVERSITY OF MINNESOTA, THE REGENTS OF
3846937 - PRODUCTION OF ALLERGENS BY PLANT TISSUE CULTURE TECHNIQUE
4082613 - PROCESS FOR THE PRODUCTION OF INSULIN BY GENETICALLY TRANSFORMED FUNGAL CELLS
4124448 - PROCESS FOR THE LARGE SCALE PRODUCTION OF HUMAN GROWTH HORMONE BY SERIAL SECONDARY SUSPENSION CULTURE

UNIVERSITY OF TOLEDO
4208483 - TISSUE CULTURE SYSTEM

UPJOHN COMPANY
4014993 - INHIBITION OF PLATELET AGGREGATION WITH SUBSTITUTED PHENYLHYDRATROPIC ACID COMPOUNDS
4092425 - RESTORATION OF INTERFERON RESPONSE

ORGANIZATIONAL PATENTING (1/69-12/81) - - ALPHA LISTING

VIRTIS COMPANY, INC.
3649465 - SPINNER FLASK
4212950 - FERMENTING APPARATUS

WISCONSIN ALUMNI RESEARCH FOUNDATION
4124701 - METHOD FOR PREPARING A REAGENT FOR PLT AND METHOD OF USE

WISTAR INSTITUTE
4108983 - VIRAL ONCOLYSATE VACCINE FOR STIMULATING THE IMMUNE MECHANISM OF MAMMALS TO SPECIES-SPECIFIC TUMORS
4172124 - METHOD OF PRODUCING TUMOR ANTIBODIES
4196265 - METHOD OF PRODUCING ANTIBODIES

WYO BEN PRODUCTS, INC.
3935067 - INORGANIC SUPPORT FOR CULTURE MEDIA

INVENTORS OF INDIVIDUALLY OWNED PATENTS (1/75-12/81) (ALPHA LISTING)

INVENTOR NAME			STREET	CITY	ST	ZIP/CNTRY
AUGSPURGER	LYNN	LAWRENCE	642 FAIRFAX	BIRMINGHAM	MI	48009
3866598 - PROCESSES FOR REPRODUCTION OF CELLULAR BODIES						
3906929 - PROCESSES FOR REPRODUCTION OF CELLULAR BODIES						
BAUGH	CLARENCE	L.	6608 ORLANDO AVE.	LUBBOCK	TX	79413
3970749 - INTERFERON PRODUCTION						
BUTZ	DAVID	E.	1 INDIAN RUN TRAIL	LITTLETON	MA	01460
4308351 - SYSTEM FOR GROWING TISSUE CULTURES						
CHICK	WILLIAM	L.	32 WILLOW RD.	WELLESLEY	MA	02181
4242459 - CELL CULTURE DEVICE						
4242460 - CELL CULTURE DEVICE						
CONE	CLARENCE	D. JR.	104 HARBOUR DRIVE	YORKTOWN	VA	23490
4018649 - PROCESS FOR CONTROL OF CELL DIVISION						
GALLETTI	PIERRE	M.	36 TABER AVE.	PROVIDENCE	RI	02906
4242459 - CELL CULTURE DEVICE						
4242460 - CELL CULTURE DEVICE						
GREATBATCH	WILSON		5220 DONNINGTON RD.	CLARENCE	NY	14031
4291125 - METHOD FOR ELECTRONIC CONTROL OF INFECTIONS USING SILVER IONS						
HALPERN	RICHARD	M.	1125 MAYTOR PLACE	BEVERLY HILLS	CA	90210
3993560 - METHOD AND APPARATUS FOR MONITORING CELLULAR ACTIVITIES						
IIZUKA	MASAHIKO			FUJISAWA		JA
4060457 - APPARATUS FOR GROWING ANIMAL CELLS						
KLEVECZ	ROBERT	R.	227 BETTYHILL DR.	DUARTE	CA	91010
3871955 - PROCESS FOR AUTOMATED PRODUCTION OF SYNCHRONOUS MAMMALIAN CELLS						
KOBAYASHI	SIGEYASU			KAMAKURA		JA
4060457 - APPARATUS FOR GROWING ANIMAL CELLS						
LEIGHTON	JOSEPH		1201 WAVERLY RD.	GLADWYNE	PA	19035
4308351 - SYSTEM FOR GROWING TISSUE CULTURES						
LICHTMAN	MARSHALL	A.		ROCHESTER	NY	
4135975 - OBTAINING HUMAN CELL LINES THAT ELABORATE COLONY STIMULATING ACTIVITY FOR MARROW CELLS OF MAN AND OTHER SPECIES						
LIOTTA	LANCE	A.	14004 MONT AVE.	EAST CLEVELAND	OH	44112
3989591 - TEST METHOD FOR SEPARATING AND/OR ISOLATING BACTERIA AND TISSUE CELLS						
MELNYK	JOHN		1316 CERRITOS DR.	LAGUNA BEACH	CA	92651
4110167 - SEMI-AUTOMATED SLIDE PROCESSOR DEVICE						
MELNYK	JOHN		1316 CERRITOS DRIVE	LAGUNA BEACH	CA	92651
4046927 - PROCESS FOR SEMI-AUTOMATED PRODUCTION OF MAMMALIAN CELL SLIDES						

INVENTORS OF INDIVIDUALLY OWNED PATENTS (1/75-12/81) (ALPHA LISTING)

INVENTOR NAME			STREET	CITY	ST	ZIP/CNTRY
MOLDENHAUER	JEANNE		RTE. 2, BOX 361A	LONG GROVE	IL	60047
4282326 - CELL CULTURE MEDIUM SUPPLEMENT						
MULLER	HANS		IM ALLMENDLI	ERLENBACH, ZURICH		CH
3925165 - APPARATUS FOR CULTURING OF TISSUE CELLS AND MICRO-ORGANISMS						
PANOL	GEORG		165 SHENANDOAH RD.	WARWICK	RI	02886
4242459 - CELL CULTURE DEVICE						
4242460 - CELL CULTURE DEVICE						
PAPAS	GARY	R.	53 E. ROGUES RD.	HUNTINGTON	NY	11743
4195131 - ENVIRONMENTALLY CONTROLLED UNIT						
PETERS	J.	HINRICH	LUGHAUSER STR. 70	5064 ROSRATH-HOFFNUN		DE
4299920 - BIOLOGICAL RECEPTACLE						
RICHARDSON	PETER	D.	60 SARGENT AVE.	PROVIDENCE	RI	02906
4242459 - CELL CULTURE DEVICE						
4242460 - CELL CULTURE DEVICE						
ROTH	JONATHAN	N.	19676 RIVERVIEW DR.	GOSHEN	IN	46526
4282317 - PECTIN CULTURE MEDIA AND METHOD						
SANDERS	MURRAY	J.	3009 SPANISH TRAIL RD.	DELRAY BEACH	FL	33444
4162303 - POTENCY AND ATOXICITY TEST FOR MODIFIED NEUROTOXIN						
SMITH	KENDALL	O.	133 TRILLIUM LANE	SAN ANTONIO	TX	78213
3943993 - LOW TEMPERATURE STORAGE OF SURFACE ATTACHED LIVING CELL CULTURES						
SUZUKI	JIRO			KAMAKURA		JA
4060457 - APPARATUS FOR GROWING ANIMAL CELLS						
VERMA	DHARMVIR	S.	5831 RUTHERGLEN	HOUSTON	TX	77096
4296205 - CELL CULTURE AND CONTINUOUS DIALYSIS FLASK AND METHOD						

PATENTS (1/63-12/81) WITH NEITHER ASSIGNMENT NOR INVENTOR INFORMATION IN THE DATA BASE

3519710 - DIRECT ACTIVE MODIFIED LIVE VIRUS VACCINE IMMUNIZATION AGAINST TRANSMISSIBLE GASTROENTERITIS IN SWINE PIGLETS AT BIRTH
3591460 - APPPARATUS AND MEANS FOR HANDLING CELLS
3717551 - METHOD OF CELL CULTURE
3734851 - METHOD AND DEVICE FOR PURIFYING BLOOD
3768977 - INTEGRAL BLOOD OXYGENATOR AND HEAT EXCHANGER
3769174 - MICROTISSUE RESPIROMETER
3773924 - INTERFERON PRODUCTION
3778353 - REMOVING A CELL CULTURE FROM A CARRIER
3812016 - CULTURE-GROWING APPARATUS
3854470 - REPRODUCTION PROCESSES FOR CELLULAR BODIES
3856475 - APPARATUS FOR TRANSFERRING A GAS BETWEEN TWO LIQUIDS

3220960	3223593	3242055	3243356	3252948	3278392	3282702	3297480	3402103	3073746	3105011	3122476
3128228	3128231	3128902	3143470	3145143	3156620	3170839	3172235	3172546	3178351	3196077	3221878

TISSUE CULTURE

FRONT PAGES OF SELECTED PATENTS

Jan-Apr 1982 U.S. Patents (10)	Selected U.S. Patents (20)	
4,317,886	4,247,646	4,201,845
4,321,330	4,259,449	4,198,482
4,323,555	4,241,187	4,184,916
4,326,027	4,242,460	4,184,922
4,326,026	4,228,242	4,228,243
4,326,034	4,238,568	4,198,483
4,310,630	4,224,413	4,266,032
4,316,962	4,220,725	4,186,253
4,311,798	4,208,483	4,254,226
4,317,882	4,203,801	4,264,739

PATENTS ARE LISTED IN ORDER OF APPEARANCE

United States Patent [19]
Johnson et al.
[11] **4,317,886**
[45] **Mar. 2, 1982**

[54] **MULTIPLE INTERIOR SURFACE ROLLER BOTTLE**

[75] Inventors: **Luther R. Johnson**, Thousand Oaks; **Bruno V. Sapatino**, Oxnard, both of Calif.

[73] Assignee: **Becton, Dickinson and Company**, Paramus, N.J.

[21] Appl. No.: **176,936**

[22] Filed: **Aug. 11, 1980**

[51] **Int. Cl.**[3] **C12M 3/04**
[52] **U.S. Cl.** **435/285**; 435/240
[58] **Field of Search** 435/284, 285, 286, 240, 435/241

[56] **References Cited**

U.S. PATENT DOCUMENTS

1,364,763	1/1921	Houghton .	
3,314,563	4/1967	Mounier	215/6
3,827,943	8/1974	Mann	435/285
3,853,712	12/1974	House et al.	435/285
3,856,138	12/1974	Maekawa et al.	206/221
3,941,661	3/1976	Noteboom	435/285

Primary Examiner—Robert J. Warden
Attorney, Agent, or Firm—Richard J. Rodrick

[57] **ABSTRACT**

A roller bottle for cell growth culturing comprises an outer housing defining a hollow chamber therein. At least one annular member is inside the chamber spaced a short radial distance inwardly from the housing. The space between the annular member and the housing is in fluid communication with the chamber. The surfaces of the annular members and the interior surface of the housing are adapted to grow cells thereon.

12 Claims, 5 Drawing Figures

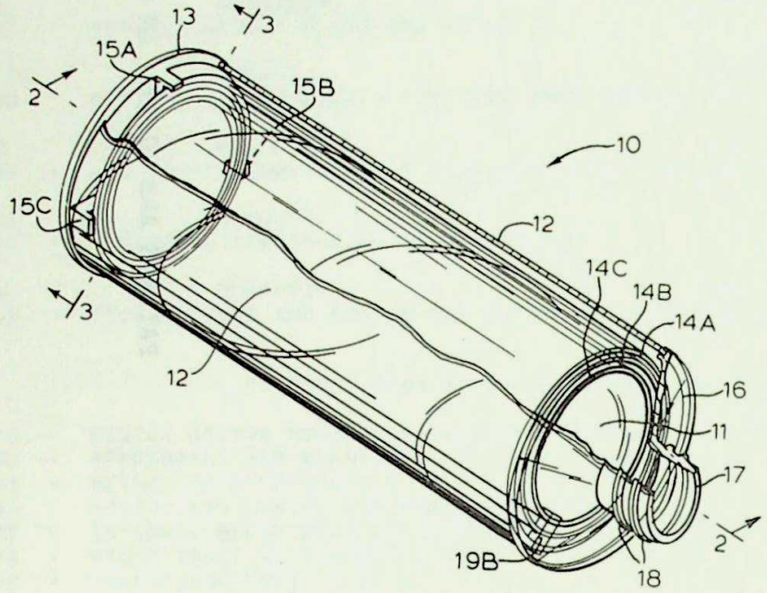

United States Patent [19]
Baker et al.
[11] **4,321,330**
[45] **Mar. 23, 1982**

[54] **TISSUE CULTURE DEVICE**

[76] Inventors: **Fraser L. Baker**, 6227 Orange St., Los Angeles, Calif. 90048; **John H. Baumann**, 836 Wartman Ave., Kingston, Ontario, Canada, K7M 4M5

[21] Appl. No.: **137,275**

[22] Filed: **Apr. 4, 1980**

[51] **Int. Cl.**[3] **C12M 1/20**; C12M 3/00
[52] **U.S. Cl.** **435/301**; 435/298; 435/299; 435/300; 435/284
[58] **Field of Search** 435/284, 285, 286, 297, 435/298, 299, 300, 301

[56] **References Cited**

U.S. PATENT DOCUMENTS

2,348,448	5/1944	Brewer	435/298
2,971,892	2/1961	Carski	435/298
3,097,070	7/1963	Aldrich et al.	435/297 X
3,158,553	11/1964	Carski	435/298
3,179,574	4/1965	Harrison	435/297
3,203,870	8/1965	Andelin	435/298
3,499,825	3/1970	Falcone et al.	435/297
3,537,956	11/1970	Falcone et al.	435/297 X
3,630,849	12/1971	Land et al.	435/297 X
3,816,264	6/1974	Winter et al.	435/298
4,012,288	3/1977	Lyman et al.	435/298 X

Primary Examiner—Robert J. Warden

[57] **ABSTRACT**

A disposable tissue culture device, particularly for aerobic cultures, comprising a tissue culture dish containing at least one shallow culture chamber for the growth of microorganisms, and a cover for the culture dish to prevent the entrance of contaminants, the cover being in contact with the contents of each culture chamber over the entire culture chamber to provide optimal viewing of each culture chamber by light microscopy through a transparent cover window, standoffs being provided between the cover and the culture dish to assure atmospheric communication between each culture chamber and ambient atmosphere, minimum annular space being provided between the cover and upper edge of each culture chamber to maintain an almost enclosed, constant volume in each culture chamber to hold the culture stable during culturing, handling and vibration, yet permit the culture to breathe. The transparent cover window portion of the cover enclosing the contents of each culture chamber is substantially flat, and has a slight convex, upward curve on the inside surface adjacent to the edge to permit egress of bubbles due to de-gassing of fluid in each culture chamber. An annular fluid reservoir, provided around the upper edge of each culture chamber, permits compensation for evaporation of fluid from the culture and provides a tolerance on the filling volume. Lift lugs are provided on opposite sides of the dish extending outward beyond the cover and upward to facilitate moving the culture dish without disturbing the cover located thereon, the lift lugs extending only partway around the dish to permit easy removal and replacement of the cover for administration of specimens and other ingredients to each culture chamber.

10 Claims, 6 Drawing Figures

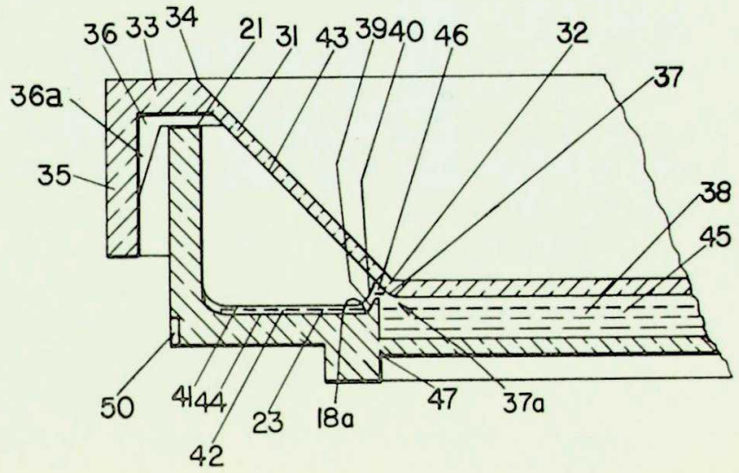

United States Patent [19]
Theilen
[11] 4,323,555
[45] Apr. 6, 1982

[54] METHOD OF PROTECTING CATTLE AND SHEEP AGAINST BOVINE LEUKEMIA VIRUS AND VACCINES FOR USE THEREIN

[75] Inventor: Gordon H. Theilen, Davis, Calif.

[73] Assignee: The Regents of the University of California, Berkeley, Calif.

[21] Appl. No.: 203,062

[22] Filed: Nov. 3, 1980

[51] Int. Cl.[3] A61K 39/00; C12N 5/02
[52] U.S. Cl. 424/88; 435/240; 435/241
[58] Field of Search 435/240, 241; 424/88, 424/89, 95

[56] References Cited

PUBLICATIONS

Rohde et al.—Chem. Abst., vol. 88 (1978), p. 187865t.
Zebrowski et al.—Veterinary Bulletin, vol. 41, (Jul.—Dec. 1971), p. 1059, (Abst. 6652).

Primary Examiner—Sam Rosen

[57] ABSTRACT

Vaccines for protecting cattle against bovine leukemia virus (BLV) are prepared by in vitro culturing of lymphoid cell lines derived from bovine or ovine lymphosarcoma tissue. The cell lines are characterized by being non-producers of BLV. The vaccines and their method of preparation can also be used for protecting sheep against bovine leukemia virus.

10 Claims, No Drawings

United States Patent [19]
Sarkar
[11] 4,326,026
[45] Apr. 20, 1982

[54] METHOD FOR FRACTIONATING CELLS

[75] Inventor: Siddhartha Sarkar, Solana Beach, Calif.

[73] Assignee: The Regents of the University of California, Berkeley, Calif.

[21] Appl. No.: 155,227

[22] Filed: Jun. 2, 1980

[51] Int. Cl.[3] C12N 5/02; A61K 35/48
[52] U.S. Cl. 435/2; 435/240; 435/241; 424/105
[58] Field of Search 435/2, 240, 241; 424/105

[56] References Cited

U.S. PATENT DOCUMENTS

4,007,087	2/1977	Ericsson	424/105
4,009,260	2/1977	Ericsson	424/105
4,067,965	1/1978	Bhattacharya	424/105

OTHER PUBLICATIONS

Colligan-Parade, The San Diego Union, Sunday, Nov. 25, 1979.
Sarkar-Sperm Motility and the Effect of Aging NIH Proposal, Oct. 25, 1979, pp. 13-20.
Sarkar-Sperm Motility and X-Linked HPRT Activity etc. Abst. submitted to Am. Biophys. Soc. Jan. 9, 1980.
Ericsson et al.-Nature, vol. 246 (1973), pp. 421-424.
Roberts-Swimming and Flying in Nature, vol. 1, Plenum Press, pp. 377-393 (1974).
Roberts et al.-Nature, vol. 262 (Aug. 5, 1976), pp. 493-494.
Katz et al.-J. Theor. Biol., vol. 67 (1977), pp. 723-732.
Dmowski et al.-Fertility and Sterility, vol. 31 (1979), pp. 52-57.
Ericsson-Chem. Abst., vol. 86 (1977), p. 11860e.
Atherton-Techniques of Human Andrology (Hafez Editor), Biomed. Press (1977), pp. 173-187.
Roberts-Nature, vol. 228 (Oct. 24, 1970), pp. 375-376.
Roberts-Nature, vol. 238 (Jul. 28, 1972), pp. 223-225.

Primary Examiner—Sam Rosen
Attorney, Agent, or Firm—Brown & Martin

[57] ABSTRACT

Enriched quantities of male and female sperm are obtained in physically separate fractions utilizing the hydrodynamic behavior of sperm in laminar flow. A flow-cell fractionator is provided for performing the method, and includes a specially constructed pipette, valve and infusion pump combination.

9 Claims, 5 Drawing Figures

United States Patent [19]
Wenz
[11] 4,326,027
[45] Apr. 20, 1982

[54] ANTIGLOBULIN CONTROL CELLS

[75] Inventor: Barry Wenz, White Plains, N.Y.

[73] Assignee: Albert Einstein College of Medicine of Yeshiva University, Bronx, N.Y.

[21] Appl. No.: 891,019

[22] Filed: Mar. 28, 1978

[51] Int. Cl.[3] C12P 21/00; C12N 5/00; G01N 31/00
[52] U.S. Cl. ..... 435/7; 435/68; 435/240; 424/11; 424/12; 23/230 B
[58] Field of Search ..... 435/7, 177, 240, 174, 435/810; 424/12, 85, 8, 1, 1.5, 11; 23/230 B; 252/408 R

[56] References Cited

U.S. PATENT DOCUMENTS

3,553,310	1/1971	Csizmas et al.	424/12
3,914,400	10/1975	Shulman et al.	424/12
4,107,287	8/1978	Morton et al.	435/7
4,130,634	12/1978	Molinaro et al.	424/12
4,166,106	8/1979	Sedlacek et al.	435/7

OTHER PUBLICATIONS

Stratton, et al, "Preparation of Test Cells for the Anti-globulin Test", *Chem. Absts.*, vol. 81, No. 17, pp. 326-327 (1974), abs. No. 102906g.
Ssebabi, "Enzyme Antihuman-globulin Test, Technique to Detect Enzyme Autoantibody", *Chem. Absts.*, vol. 80, No. 23, p. 322, (1974), abs. No. 131445y.

Primary Examiner—Thomas G. Wiseman
Attorney, Agent, or Firm—Stephen E. Feldman; Marvin Feldman; Steve T. Zelson

[57] ABSTRACT

Antiglobulin control cells are disclosed wherein reagent human red blood cells are coated with univalent antibody fragments. These control cells provide a high degree of specifity in determining the presence of active anti-human sera, which specifity is lacking in conventional Coombs control cells. The evaluation results of the reactivity tests may be performed in the present manner, but the positive hemagglutination provides assurance of anti-human sera activity as opposed to other agglutinating activity, such as protein that might be present.

15 Claims, No Drawings

United States Patent [19]
Peel et al.
[11] 4,326,034
[45] Apr. 20, 1982

[54] FERMENTATION PROCESS FOR PRODUCING HIGHER PLANT CELLS

[75] Inventors: Eric Peel, Shepperton; Colin C. Dalton, Laleham, both of England

[73] Assignee: The British Petroleum Company Limited, London, England

[21] Appl. No.: 65,002

[22] Filed: Aug. 8, 1979

[30] Foreign Application Priority Data

Aug. 16, 1978 [GB] United Kingdom 33470/78

[51] Int. Cl.[3] C12N 5/02
[52] U.S. Cl. 435/241; 435/818
[58] Field of Search 435/240, 241

[56] References Cited

U.S. PATENT DOCUMENTS

3,816,960 6/1974 Gudin et al. .

OTHER PUBLICATIONS

American Journal of Botany, vol. 50, pp. 248-254 (1963).

Primary Examiner—Alvin E. Tanenholtz
Attorney, Agent, or Firm—Morgan, Finnegan, Pine, Foley and Lee

[57] ABSTRACT

Higher plant cells (e.g. cells of Spermatophyta) capable of growing in the presence of light and in the absence of a carbohydrate carbon source are produced from higher plant cells which require a carbohydrate source by cultivation in an aqueous medium in the presence of light, O_2 and CO_2. The quantity of carbohydrate is reduced during the cultivation while the concentration of dissolved oxygen is maintained at a value below 250 n mol of O_2 per ml of medium.

Preferably cultivation is in continuous culture and the preferred dissolved O_2 concentration is from 25 to 85 n mol per ml. The CO_2 present and the quantum flux density may be increased as the carbohydrate is reduced.

8 Claims, No Drawings

United States Patent [19]
Girard et al.
[11] **4,310,630**
[45] * **Jan. 12, 1982**

[54] **ARRANGEMENT FOR CULTIVATING CELLS OF ANIMAL AND HUMAN TISSUES**

[75] Inventors: **Henry Girard**, Burtigny/Vd; **Rudolf Bühler**, Wolfhausen, both of Switzerland

[73] Assignee: **Chemap AG**, Männedorf, Switzerland

[*] Notice: The portion of the term of this patent subsequent to Oct. 14, 1997, has been disclaimed.

[21] Appl. No.: **130,261**

[22] Filed: **Mar. 13, 1980**

Related U.S. Application Data

[63] Continuation of Ser. No. 934,315, Aug. 16, 1978, Pat. No. 4,228,242.

[30] **Foreign Application Priority Data**

Aug. 16, 1977 [CH] Switzerland 10058/77

[51] **Int. Cl.**³ **C12M 3/00**
[52] **U.S. Cl.** **435/284**; 435/285; 435/310; 435/312; 435/313
[58] **Field of Search** 435/284, 313, 310, 285, 435/312

[56] **References Cited**

U.S. PATENT DOCUMENTS

3,732,149	5/1973	Santerno	435/312 X
3,812,016	5/1974	Muller	435/313 X
3,827,943	8/1974	Mann	435/285
3,853,712	12/1974	House et al.	435/313 X
3,925,165	12/1975	Muller	435/310 X
4,144,136	3/1979	Corbeil	435/285
4,228,242	10/1980	Girard	435/284

Primary Examiner—R. B. Penland
Attorney, Agent, or Firm—Michael J. Striker

[57] **ABSTRACT**

An arrangement for cultivating cells of animal and human tissues in a monocellular layer and the like, has a container bounding an inner chamber for accommodating a nutrient medium, and a plurality of tubular supporting elements for supporting the cells and rotatable about an axis. The tubular rotatable elements extend in an axial direction of the inner chamber of the container. Additional elements are provided for rotating the tubular supporting elements. These additional rotating elements include an axle which defines the axis of rotation, and two end discs each arranged adjacent to and supporting one of the axial ends of the tubular supporting elements. The tubular supporting elements extend in a horizontal direction. However, they can be inclined at an angle relative to the horizontal direction by means of rotation of the end discs in mutually opposite directions.

14 Claims, 6 Drawing Figures

United States Patent [19]
Katinger et al.
[11] **4,311,798**
[45] * **Jan. 19, 1982**

[54] **METHOD OF AND AN ARRANGEMENT FOR CULTIVATING CELLS OF ANIMAL AND HUMAN TISSUES**

[75] Inventors: **Hermann Katinger**, Vienna; **Winfried Scheirer**, Wiener-Neudorf, both of Austria

[73] Assignee: **Chemap AG**, Maennedorf, Switzerland

[*] Notice: The portion of the term of this patent subsequent to Nov. 6, 1996, has been disclaimed.

[21] Appl. No.: **15,282**

[22] Filed: **Feb. 26, 1979**

Related U.S. Application Data

[60] Continuation of Ser. No. 840,165, Oct. 6, 1977, Pat. No. 4,173,516, which is a division of Ser. No. 814,415, Jul. 11, 1977, abandoned.

[30] **Foreign Application Priority Data**

Jul. 15, 1976 [AT] Austria 5213/76

[51] **Int. Cl.**³ **C12M 3/02**
[52] **U.S. Cl.** **435/286**; 261/77; 435/284; 435/314; 435/313; 435/240; 435/241; 435/818
[58] **Field of Search** 435/284, 286, 314, 240, 435/241, 313, 315, 316, 818; 261/77

[56] **References Cited**

U.S. PATENT DOCUMENTS

642,460	1/1900	Kersten	261/77 X
3,476,366	11/1969	Brooks et al.	435/314 X
3,681,200	8/1972	Ridgway, Jr.	435/314
3,705,082	12/1972	Hondermarck et al.	435/316
3,717,552	2/1973	Hondermarck et al.	435/314
3,790,141	2/1974	Champeau	261/77
3,880,716	4/1975	Engelbart et al.	435/818 X
3,910,826	10/1975	Kataoka	261/77 X
3,986,934	10/1976	Müller	435/314
4,017,565	4/1977	Müller	435/314 X
4,036,699	7/1977	Quigg	435/314
4,173,516	11/1979	Katinger et al.	435/286

Primary Examiner—Robert J. Warden
Attorney, Agent, or Firm—Michael J. Striker

[57] **ABSTRACT**

A method of cultivating cells of animal and human tissues includes the steps of introducing the cells into a nutrient solution in which they tend to settle, and maintaining the cells in the solution in a suspended state so as to prevent their settling by introducing an oxygen-containing gas to the solution. An apparatus for carrying out the method includes a container for a nutrient solution, an arrangement for introducing the oxygen-containing gas into the container, and a guide arrangement in the container and operative for guiding the nutrient solution so that the latter performs a circulatory movement in the container when the oxygen-containing gas is introduced into the latter. The guide arrangement may be formed as a tubular member, as a substantially flat partition wall, or as an inner wall of a circumferentially complete tubular container.

16 Claims, 6 Drawing Figures

United States Patent [19]
Viza
[11] **4,316,962**
[45] **Feb. 23, 1982**

[54] **NOVEL CELL LINE**

[75] Inventor: **Dimitri Viza**, Bourg-la-Reine, France

[73] Assignee: **The International Institute of Differentiation Limited**, Guernsey, Channel Islands

[21] Appl. No.: **860,439**

[22] Filed: **Dec. 14, 1977**

[30] **Foreign Application Priority Data**

Dec. 16, 1976 [GB] United Kingdom 52675/76

[51] **Int. Cl.**³ **C12N 5/02**
[52] **U.S. Cl.** **435/241**
[58] **Field of Search** 195/1.8; 435/241

[56] **References Cited**

PUBLICATIONS

Moore et al., Cancer, vol. 19, No. 5 (May 1966), pp. 713-723.
Minowada et al., J. Nat. Can. Inst., vol. 49, No. 3, Sep. 1972, pp. 891-895.
Nilsson, Int. J. Cancer, vol. 7 (1971), pp. 380-396.
Paul, Cell & Tiss. Cult., Fift. Edit. 1975, pp. 25-39, 62, 63, 232-235, 466-470.
Slesinger et al., Chromosoma (Berl.), vol. 49 (1974), pp. 173-184.
Abercrombie et al., A Dictionary of Biology-Sixth Edit. (Penguin Books), pp. 110-111.
Moorhead et al., Experiment. Cell. Res., vol. 20 (1960), pp. 613-616.
Nilsson et al., Int. J. Cancer, vol. 8 (1971), pp. 443-450.
Moore, Methods in Cancer Res., Chap. X (1970), pp. 423-453.
Collins et al., Nature, vol. 270, Nov. 24, 1977, pp. 347-349.
Moore et al., J. Sur. Res. vol. 5, No. 6 (1965), pp. 270-282.
Zimmerman, Experiment Cell Res., vol. 20, pp. 540-547.
Schlesinger et al., Chem. Abst., vol. 82 (1975), pp. 122425f.
Slezinger et al., Chem. Abst., vol. 81 (1974), pp. 102410y.
Baumal et al., Nature New Biology, vol. 230 (Mar. 3, 1971), pp. 20-21.
Paltrowitz et al., Sinai Journ., vol. 38 (1971), pp. 284-292.
Moore et al., J.A.M.A., vol. 199, No. 8, Feb. 20, 1967, pp. 519-524.
Imamura et al., PSEBM, vol. 128 (1968), pp. 1179-1183.

Primary Examiner—Sam Rosen
Attorney, Agent, or Firm—Stevens, Davis, Miller & Mosher

[57] **ABSTRACT**

A cell line, identified by the reference LDV/7, was established from peripheral blood leucocytes of a 75 year old male volunteer, and may be propagated by culturing the cells in a suitable nutrient culture medium. The cell line may be used in the production of immunological material.

8 Claims, No Drawings

United States Patent [19]
Horiguchi et al.
[11] **4,317,882**
[45] **Mar. 2, 1982**

[54] **PRODUCTION OF PLASMINOGEN ACTIVATOR**

[75] Inventors: **Sadayuki Horiguchi**; **Akio Hasegawa**, both of Fuji; **Mitsuru Shibukawa**, Yokohama, all of Japan

[73] Assignee: **Asahi Kasei Kogyo Kabushiki Kaisha**, Osaka, Japan

[21] Appl. No.: **143,680**

[22] Filed: **Apr. 25, 1980**

[30] **Foreign Application Priority Data**

Apr. 26, 1979 [JP] Japan 54-50819
Oct 12, 1979 [JP] Japan 54-131543

[51] **Int. Cl.**³ **C12N 9/48**
[52] **U.S. Cl.** **435/212**; 435/215; 435/240; 435/818
[58] **Field of Search** 435/212, 215, 240

[56] **References Cited**

U.S. PATENT DOCUMENTS

3,873,423	3/1975	Munder	435/3
3,930,944	1/1976	Nicol	435/215

Primary Examiner—Lionel M. Shapiro
Attorney, Agent, or Firm—Sughrue, Mion, Zinn, Macpeak and Seas

[57] **ABSTRACT**

A plasminogen activator having a molecular weight of 45,000 to 68,000 is formed as a single fraction in the cells of human kidney or lung, and is separated and recovered with good efficiency without reducing its molecular weight. The pH of a solution to be contacted with said cells and the concentration of dissolved oxygen should be maintained within suitable ranges in order to form the plasminogen activator having a molecular weight of 45,000 to 68,000 as a single fraction. Furthermore, by properly adjusting the residence time of the solution with the cells, the activator can be formed over a long period of more than 40 days. To separate the activator, the pH of the solution in the separating step is maintained preferably at 4 to 12. By causing a metal chelating agent to be present in the solution in the separating step, the plasminogen activator can be obtained without reducing its molecular weight.

10 Claims, 5 Drawing Figures

United States Patent [19]
Berky et al.
[11] **4,247,646**
[45] **Jan. 27, 1981**

[54] **LABORATORY APPARATUS FOR CLONING MAMMALIAN CELLS**

[75] Inventors: **John J. Berky**, Little Rock; **John Hunziker, Jr.**, Pine Bluff; **Laurence A. Zolotor**, Little Rock, all of Ark.

[73] Assignee: **The United States of America as represented by the Department of Health, Education and Welfare**, Washington, D.C.

[21] Appl. No.: **941,666**

[22] Filed: **Sep. 12, 1978**

[51] **Int. Cl.**[3] **C12M 3/00; C12M 1/00**
[52] **U.S. Cl.** **435/284**; 30/301; 30/358; 435/287
[58] **Field of Search** 435/284, 285, 286, 287, 435/292, 297, 298, 299; 30/301, 358

[56] **References Cited**

U.S. PATENT DOCUMENTS

268,886	12/1882	Hall	30/301
2,140,266	12/1938	Leeberg	30/301
2,290,648	7/1942	McCain	30/301
2,526,811	10/1950	Dawson	30/301
2,871,168	1/1959	Salisbury, Jr.	195/139
3,334,809	8/1967	Zajic et al.	30/358 X
3,482,311	12/1969	Farris	435/287
3,791,930	2/1974	Saxholm	195/103.5 R
3,985,608	10/1976	Saxholm	195/127
4,053,362	10/1977	Sforza	195/103.5 R
4,072,578	2/1978	Cady et al.	195/127

Primary Examiner—Robert J. Warden
Attorney, Agent, or Firm—John S. Roberts, Jr.

[57] **ABSTRACT**

Laboratory apparatus for cloning mammalian cells includes a support plate and a plurality of tubular cylinders fixedly secured within the plate and projecting from one face thereof. All of the cylinders, with the exception of one pair, are disposed within a concentrated array defined within a predetermined sector region of the plate, the remaining pair of cylinders being located remote from the sector array yet equidistantly spaced from each other and from the sector array so as to complete the distribution pattern. A substantially C-shaped ring member is fixedly secured to, or integrally formed with, the opposite face of the support plate, in order to facilitate maneuverability of the assemblage when placing the same onto a Petri dish for isolating the colonies developing thereon. The plate and ring member are fabricated from transparent polycarbonate in order to permit the colonies to be identified or viewed by background lighting techniques. The distal ends of the isolating cylinders are also sharply beveled in order to cut into or penetrate the Petri dish so as to sealingly isolate the colonies.

13 Claims, 13 Drawing Figures

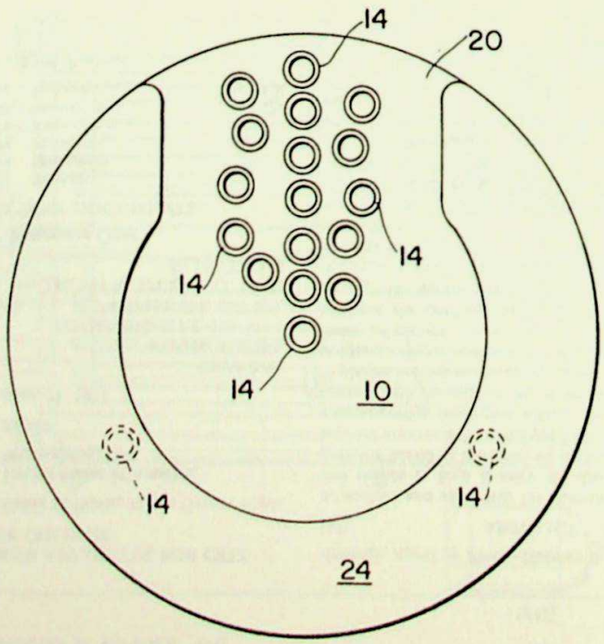

United States Patent [19]
Katinger et al.
[11] **4,259,449**
[45] **Mar. 31, 1981**

[54] **METHOD OF CULTIVATING CELLS OF ANIMAL AND HUMAN TISSUES**

[75] Inventors: **Hermann Katinger**, Vienna; **Winfried Scheirer**, Wiener-Neudorf, both of Austria

[73] Assignee: **Chemap AG**, Männedorf, Switzerland

[21] Appl. No.: **936,600**

[22] Filed: **Aug. 23, 1978**

Related U.S. Application Data

[63] Continuation of Ser. No. 814,415, Jul. 11, 1977, abandoned.

[30] **Foreign Application Priority Data**

Jul. 15, 1976 [AT] Austria 5213/76

[51] **Int. Cl.**[3] **C12N 5/02**
[52] **U.S. Cl.** **435/241**; 261/77
[58] **Field of Search** 435/240, 241, 284, 286, 435/313, 316; 261/77

[56] **References Cited**

U.S. PATENT DOCUMENTS

2,975,065	3/1961	White	99/147
3,405,920	10/1968	Lefrancois	435/313
3,506,541	4/1970	Snelling	435/240
4,173,516	11/1979	Katinger et al.	435/286

FOREIGN PATENT DOCUMENTS

2722921	1/1978	Fed. Rep. of Germany	435/286

Primary Examiner—Robert J. Warden
Attorney, Agent, or Firm—Michael J. Striker

[57] **ABSTRACT**

A method of cultivating cells of animal and human tissues includes the steps of introducing the cells into a nutrient solution in which they tend to settle, and maintaining the cells in the solution in a suspended state so as to prevent their settling by introducing an oxygen-containing gas into the solution. An apparatus for carrying out the method includes a container for a nutrient solution, an arrangement for introducing the oxygen-containing gas into the container, and a guide arrangement in the container and operative for guiding the nutrient solution so that the latter performs a circulatory movement in the container when the oxygen-containing gas is introduced into the latter. The guide arrangement may be formed as a tubular member, as a substantially flat partition wall, or as an inner wall of a circumferentially complete tubular container.

8 Claims, 6 Drawing Figures

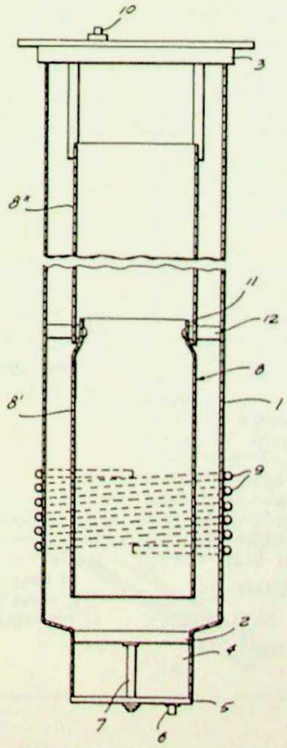

United States Patent [19]

White

[11] **4,241,187**

[45] **Dec. 23, 1980**

[54] **METHOD AND APPARATUS FOR CELL AND TISSUE CULTURE**

[75] Inventor: **David C. White**, Maple Grove, Minn.

[73] Assignee: **United States of America**, Washington, D.C.

[21] Appl. No.: **24,247**

[22] Filed: **Mar. 27, 1979**

[51] **Int. Cl.**[3] **C12M 3/00**

[52] **U.S. Cl.** **435/284**; 435/283; 435/285; 210/321.2; 210/321.3

[58] **Field of Search** ..... 435/283, 284, 285, 286, 435/240, 241; 210/321 A, 321 B, DIG. 23, 22 R; 128/DIG. 3

[56] **References Cited**

U.S. PATENT DOCUMENTS

2,996,429	8/1961	Toulmin	435/285 X
3,734,851	5/1973	Matsumura	210/22
3,827,565	8/1974	Matsumura	210/22 R
3,883,393	5/1975	Knazek et al.	435/284 X
3,941,662	3/1976	Munder et al.	435/284
3,993,560	11/1976	Halpern	435/284 X

Primary Examiner—R. B. Penland

Attorney, Agent, or Firm—Holman & Stern

[57] **ABSTRACT**

A method and apparatus for culturing biological cells and tissues in high density are disclosed, employing perfused blood as the nutrient source. The cells or tissues are separated from the perfused blood by means of a microporous membrane which is maintained in close contact with the cells or tissues, and which is permeable to plasma solutes and to cell products and impermeable to blood cellular components, whereby continuous diffusion of plasma solutes and cell products takes place between the perfused blood and the cells or tissues through the microporous membrane while maintaining the cells or tissues separated from the cellular components of the blood. The blood flow passageway across the surface of the microporous membrane is designed to enable blood perfusion at a sufficiently high linear velocity so as to avoid thrombosis. Continuous blood perfusion through the blood flow passageway is provided by connecting the blood flow passageway into an arterio-venous shunt constructed in a living donor animal.

2 Claims, 3 Drawing Figures

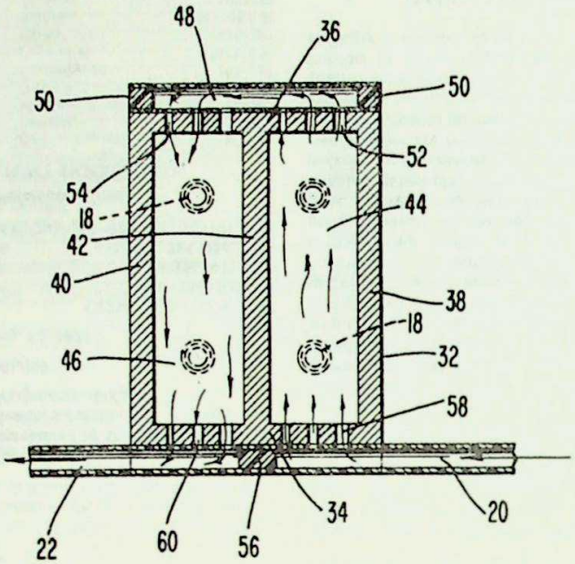

United States Patent [19]

Chick et al.

[11] **4,242,460**

[45] **Dec. 30, 1980**

[54] **CELL CULTURE DEVICE**

[76] Inventors: **William L. Chick**, 32 Willow Rd., Wellesley, Mass. 02181; **Pierre M. Galletti**, 36 Taber Ave.; **Peter D. Richardson**, 60 Shrgent Ave., both of Providence, R.I. 02906; **Georg Panol**, 165 Shenandoah Rd., Warwick, R.I. 02886

[21] Appl. No.: **972,961**

[22] Filed: **Dec. 26, 1978**

[51] **Int. Cl.**[3] **C12M 3/00**

[52] **U.S. Cl.** **435/284**; 3/1; 128/DIG. 3; 210/497.1; 210/321.1; 210/321.2; 210/645

[58] **Field of Search** ..... 435/283, 284, 285, 286, 435/240, 241, 1, 2; 210/21, 321 R, 321 A, 497.1; 128/DIG. 3; 3/1

[56] **References Cited**

U.S. PATENT DOCUMENTS

Re. 24,822	5/1960	Pallotta et al.	435/285 X
3,131,143	4/1964	Ferrari et al.	210/22
3,388,803	6/1968	Scott	210/321
3,489,647	1/1970	Kolobow	435/283 X
3,734,851	5/1973	Matsumura	210/22
3,742,946	7/1973	Grossman	210/321 X
3,821,087	6/1974	Knazek et al.	195/127
3,827,565	8/1974	Matsumura	210/22
3,883,393	5/1975	Knazek et al.	195/1.8
4,061,141	12/1977	Hyden et al.	128/DIG. 3

FOREIGN PATENT DOCUMENTS

1027304 3/1978 Canada .

OTHER PUBLICATIONS

Chick et al., A Hybrid Artificial Pancreas, Trans. Amer. Soc. Artif. Int. Organ., vol. XXI, pp. 8–14, 1975.
Whittmore, et al., Effects of the Hybrid Artificial Pancreas in Diabetic Rats, Trans, Am. Soc. Artif. Intern. Organs, vol. XXIII, pp. 336–340, 1977.
Galletti et al., Le Pancreas Artificiel, Journéles de Diabétologie, pp. 15–19, 1977.
Chick et al., Science, vol. 197, pp. 780–782; 1977.
Whittmore, Chick et al., Function of Hybrid Artificial Pancreas in Diabetic Rats, Surgical Forum, vol. XXVIII, pp. 93–97, 1977.
Chick, Like et al., Science, vol. 187, pp. 847–849, 1975.
Tanishita et al., Trans. Amer. Soc. Artif. Int. Organs, vol. XXI, pp. 216–223, 1975.

Primary Examiner—Robert J. Warden

[57] **ABSTRACT**

A cell culture device for use, e.g., as an artificial pancreas, featuring, in various aspects, a semipermeable tube wrapped about a spool and mounted within a cylinder to form a cell culture compartment; an inlet and an outlet strand of the semipermeable tube being wrapped to form alternating adjacent coils to provide improved convective transport; and the semipermeable tube being wrapped to form helical coils to provide improved conductive transport.

18 Claims, 7 Drawing Figures

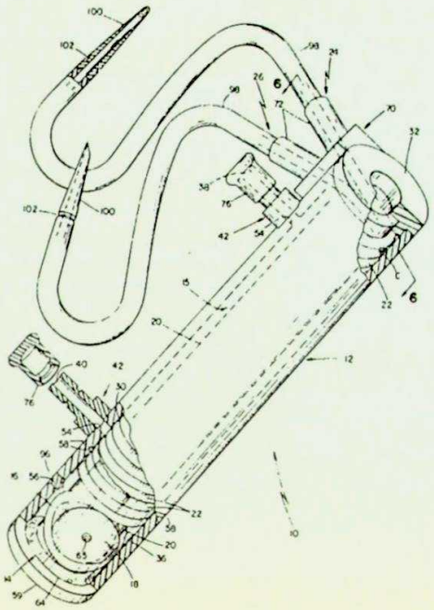

United States Patent [19]
Girard et al.
[11] **4,228,242**
[45] **Oct. 14, 1980**

[54] **ARRANGEMENT FOR CULTIVATING CELLS OF ANIMAL AND HUMAN TISSUES**

[75] Inventors: **Henry Girard**, Burtigny; **Rudolf Bühler**, Wolfhausen, both of Switzerland

[73] Assignee: **Chemap AG**, Maennedorf, Switzerland

[21] Appl. No.: **934,315**

[22] Filed: **Aug. 16, 1978**

[30] **Foreign Application Priority Data**

Aug. 16, 1977 [CH] Switzerland 10058/77

[51] **Int. Cl.**[3] **C12M 3/00**
[52] **U.S. Cl.** **435/284**; 435/310; 435/313
[58] **Field of Search** 195/127, 142, 143; 435/284, 313, 310

[56] **References Cited**

U.S. PATENT DOCUMENTS

3,732,149	5/1973	Santerno	195/127 X
3,812,016	5/1974	Muller	195/143 X
3,827,943	8/1974	Mann	195/127
3,853,712	12/1974	House et al.	195/127
3,925,165	12/1975	Muller	195/142 X
4,144,136	3/1979	Corbeil	195/142

Primary Examiner—R. B. Penland
Attorney, Agent, or Firm—Michael J. Striker

[57] **ABSTRACT**

An arrangement for cultivating cells of animal and human tissues in a monocellular layer and the like, has a container bounding an inner chamber for accommodating a nutrient medium, and a plurality of tubular supporting elements for supporting the cells and rotatable about an axis. The tubular rotatable elements extend in an axial direction of the inner chamber of the container. Additional elements are provided for rotating the tubular supporting elements. These additional rotating elements include an axle which defines the axis of rotation, and two end discs each arranged adjacent to and supporting one of the axial ends of the tubular supporting elements. The tubular supporting elements extend in a horizontal direction. However, they can be inclined at an angle relative to the horizontal direction by means of rotation of the end discs in mutually opposite directions.

11 Claims, 6 Drawing Figures

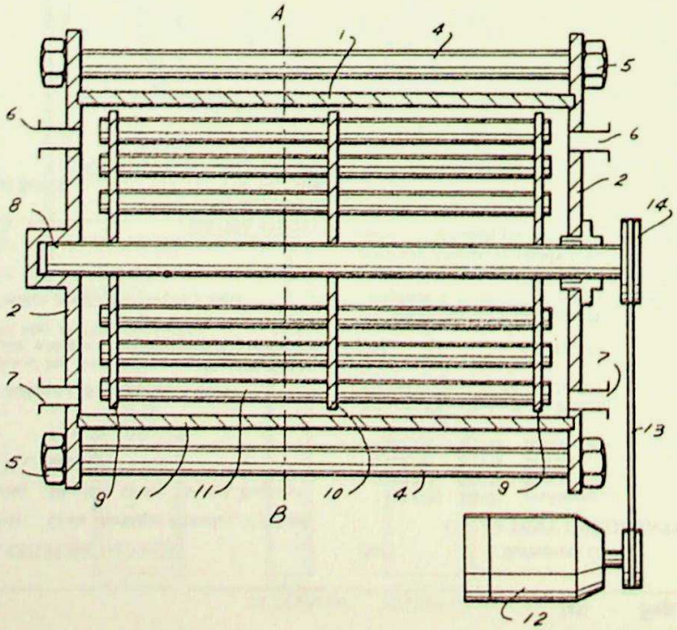

United States Patent [19]
Lynn
[11] **4,238,568**
[45] **Dec. 9, 1980**

[54] **ROLLER BOTTLE**

[75] Inventor: **Robert W. Lynn**, Oxnard, Calif.

[73] Assignee: **Becton, Dickinson and Company**, Rutherford, N.J.

[21] Appl. No.: **949,450**

[22] Filed: **Oct. 10, 1978**

[51] **Int. Cl.**[3] **C12M 1/24**
[52] **U.S. Cl.** ..... **435/285**; 215/1 C; 215/10; 435/296
[58] **Field of Search** ..... 215/1 R, 1 C, 329, 10; 435/284, 285, 286, 296; D9/90, 92, 103, 125

[56] **References Cited**

U.S. PATENT DOCUMENTS

D. 20,376	12/1890	Meinecke	215/1 R
D. 159,169	6/1950	Smith	D9/92
D. 193,031	6/1962	Hills	D9/92
640,860	1/1900	Baum	215/1 R
1,440,987	1/1923	Hammer	215/329
1,472,088	10/1923	Puckett	215/1 R
1,914,353	6/1933	Rettew	215/1 R
1,920,515	8/1933	Marsden	215/10 X
3,740,321	6/1973	Pagano	435/285
4,010,860	3/1977	Garber	215/1 R

FOREIGN PATENT DOCUMENTS

184197	4/1906	Fed. Rep. of Germany	215/1 R
2135431	1/1973	Fed. Rep. of Germany	215/1 R
550076	10/1956	Italy	215/1 C

Primary Examiner—Donald F. Norton
Attorney, Agent, or Firm—Kane, Dalsimer, Kane, Sullivan and Kurucz

[57] **ABSTRACT**

A roller bottle is disclosed having a plurality of sections which may be bonded after their interior surfaces have been treated to enhance cell adhesion. The bottle may be plastic so that it is disposable, and has a pair of serrated circumferential edges to improve traction when in contact with rollers on a standard cell production roller apparatus. It includes a bottom cap, a cylindrical section, a top cap having a threaded neck, and a screw cap. The bottom and top caps include the serrated edges which enable the bottle to roll rather than slip on a roller apparatus. A method for the use of the bottles is also disclosed wherein a roller apparatus is able to rotate a large number of stacked bottles.

14 Claims, 3 Drawing Figures

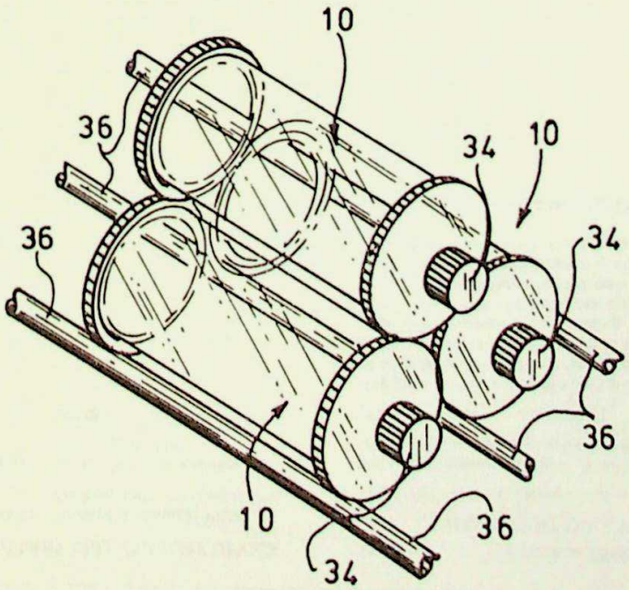

United States Patent [19]

Burbidge

[11] **4,224,413**

[45] **Sep. 23, 1980**

[54] **CELL CULTURE METHOD**

[75] Inventor: **Colin Burbidge**, Crawley, England

[73] Assignee: **Beecham Group Limited**, England

[21] Appl. No.: **962,062**

[22] Filed: **Nov. 20, 1978**

Related U.S. Application Data

[60] Division of Ser. No. 826,761, Aug. 22, 1977, Pat. No. 4,144,126, which is a continuation-in-part of Ser. No. 686,097, May 13, 1976, abandoned.

[30] **Foreign Application Priority Data**

May 21, 1975 [GB] United Kingdom 21998/75

[51] **Int. Cl.**[2] **C12M 3/00**

[52] **U.S. Cl.** **435/284**; 435/285; 435/313; 435/812

[58] **Field of Search** 195/127, 139, 142, 109; 435/284, 285, 313, 812, 818, 288

[56] **References Cited**

U.S. PATENT DOCUMENTS

3,677,895	7/1972	Hashimoto	195/109 X
3,740,321	6/1973	Pagano et al.	195/127
3,898,045	8/1975	Bowley	435/285 X
3,982,998	9/1976	Hitzman et al.	195/109 X

Primary Examiner—R. B. Penland

Attorney, Agent, or Firm—Jacobs & Jacobs

[57] **ABSTRACT**

An apparatus for culturing cells is produced which comprises a vessel, a solid porous matrix within the vessel which permits the adherence of cells, a foam generator located to supply foam to at least part of the surface of the solid porous matrix and means for removing liquid from the vessel.

4 Claims, 1 Drawing Figure

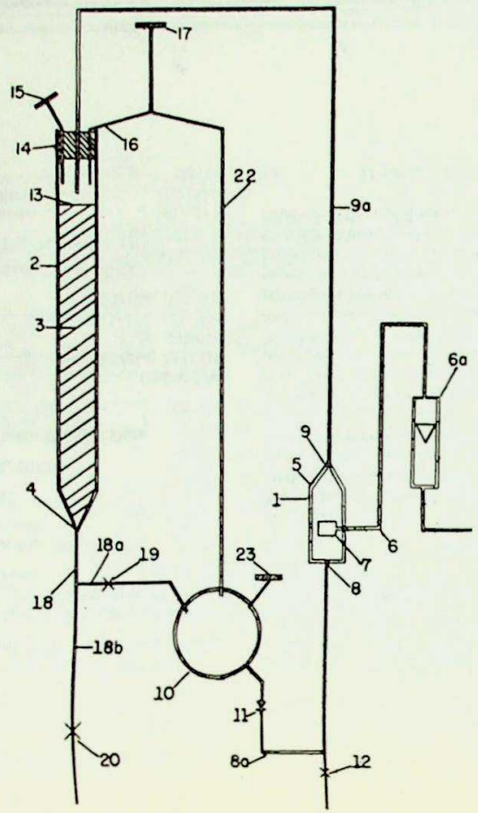

United States Patent [19]

Knazek et al.

[11] **4,220,725**

[45] **Sep. 2, 1980**

[54] **CAPILLARY CELL CULTURE DEVICE**

[75] Inventors: **Richard A. Knazek; Pietro M. Gullino**, both of Bethesda, Md.

[73] Assignee: **United States of America**, Washington, D.C.

[21] Appl. No.: **892,853**

[22] Filed: **Apr. 3, 1978**

Related U.S. Application Data

[63] Continuation-in-part of Ser. No. 736,451, Oct. 28, 1976, abandoned.

[51] **Int. Cl.**[2] **C12M 3/04**

[52] **U.S. Cl.** **435/285**; 435/240

[58] **Field of Search** 195/127, 139; 435/285, 435/286

[56] **References Cited**

U.S. PATENT DOCUMENTS

3,821,087	6/1974	Knazek et al.	195/127

Primary Examiner—Alvin E. Tanenholtz

Attorney, Agent, or Firm—Holman & Stern

[57] **ABSTRACT**

The growth of cells within a device containing a bundle of semi-permeable, tubular capillaries is disclosed. The bundle of capillaries is wrapped in an envelope of porous sheet material, thus creating an extra-envelope space into which the cells can migrate for periodic removal without disturbing the main culture within the capillaries. Porous capillaries may also be employed, in place of or in addition to the porous envelope.

11 Claims, 4 Drawing Figures

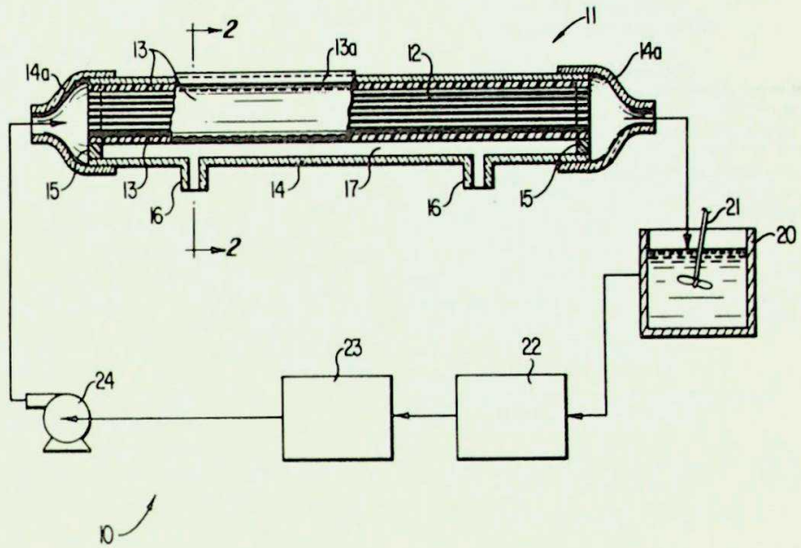

United States Patent [19]
Lee

[11] **4,208,483**
[45] **Jun. 17, 1980**

[54] **TISSUE CULTURE SYSTEM**

[75] Inventor: **Harold H. Lee**, Toledo, Ohio

[73] Assignee: **The University of Toledo**, Toledo, Ohio

[21] Appl. No.: **944,267**

[22] Filed: **Sep. 21, 1978**

[51] **Int. Cl.**[2] **C12M 3/00**
[52] **U.S. Cl.** **435/284**; 435/313
[58] **Field of Search** 195/127, 139, 142; 435/284, 313

[56] **References Cited**

U.S. PATENT DOCUMENTS

3,028,314	4/1962	Means et al.	195/127 X
3,062,724	11/1962	Reusser	195/127 X
3,839,155	10/1974	McAleer et al.	195/127
4,004,981	1/1977	Hurni et al.	195/127
4,065,359	12/1977	Hurni	195/127

Primary Examiner—R. B. Penland
Attorney, Agent, or Firm—Wilson, Fraser, Barker & Clemens

[57] **ABSTRACT**

A tissue culture system for zero gravity high-density cultivation of eucaryotic cells requiring attachment to a substratum in order to differentiate is disclosed. A major component of the system is a cylindrical bottle filled with culture medium and having mounted therein a rotatable shaft. The shaft includes a plurality of collagen-treated discs projecting therefrom and at an angle to the shaft to provide the necessary attachment substratum and to impel the culture medium as the shaft is rotated. Means are provided for initial stocking of the bottle with the culture cells and for continuously supplying fresh medium to and removing waste medium from the bottle.

4 Claims, 2 Drawing Figures

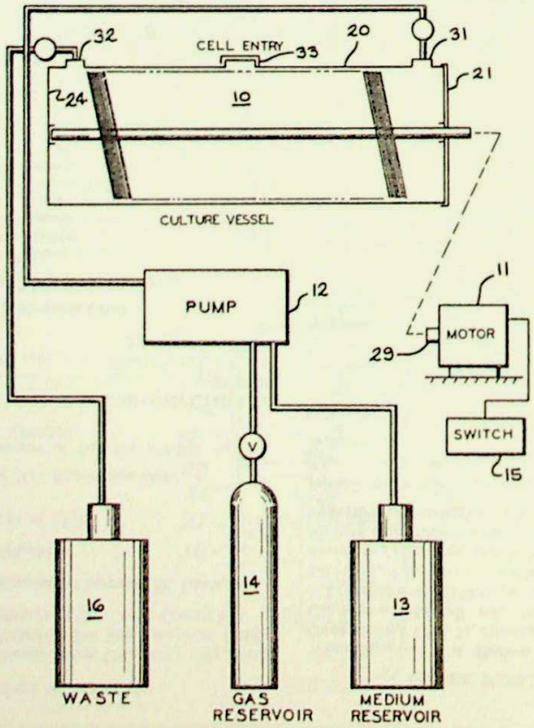

United States Patent [19]
Telling et al.

[11] **4,203,801**
[45] **May 20, 1980**

[54] **CELL AND VIRUS CULTURE SYSTEMS**

[75] Inventors: **Ronald C. Telling**, Woking; **Roy J. Passingham**, Fleet; **Brian L. Kitchener**; **David G. Hopkinson**, both of Farnborough, all of England

[73] Assignee: **Burroughs Wellcome Co.**, Research Triangle Park, N.C.

[21] Appl. No.: **783,660**

[22] Filed: **Apr. 1, 1977**

Related U.S. Application Data

[63] Continuation-in-part of Ser. No. 670,448, Mar. 25, 1976, Pat. No. 4,085,203, and Ser. No. 354,195, Apr. 25, 1973, abandoned.

[30] **Foreign Application Priority Data**

Apr. 26, 1972 [GB] United Kingdom 19387/72

[51] **Int. Cl.**[2] **C12K 9/00**; C12B 3/00; C12K 5/00
[52] **U.S. Cl.** **435/284**
[58] **Field of Search** 195/1.8, 1.7

[56] **References Cited**

U.S. PATENT DOCUMENTS

3,493,651	2/1970	Sloane	195/1.1
3,717,551	2/1973	Bizzini et al.	195/1.1
4,055,466	10/1977	Torney et al.	195/1.8

FOREIGN PATENT DOCUMENTS

1517758	1/1970	Fed. Rep. of Germany .
1598245	8/1970	France .
786824	11/1957	United Kingdom .
989247	4/1965	United Kingdom .

Primary Examiner—Shep K. Rose
Attorney, Agent, or Firm—Donald Brown

[57] **ABSTRACT**

A cell culture system which comprises living eucaryotic cells, such as those of human or animal origin, or mycophyta dispersed within a solid carrier body or bed, which carrier consists of porous or particulate material capable of retaining the cells while allowing liquid media to pass through or to have contact with the said cells, and processes for preparing and maintaining such culture systems, particularly for the purpose of virus propagation.

21 Claims, 1 Drawing Figure

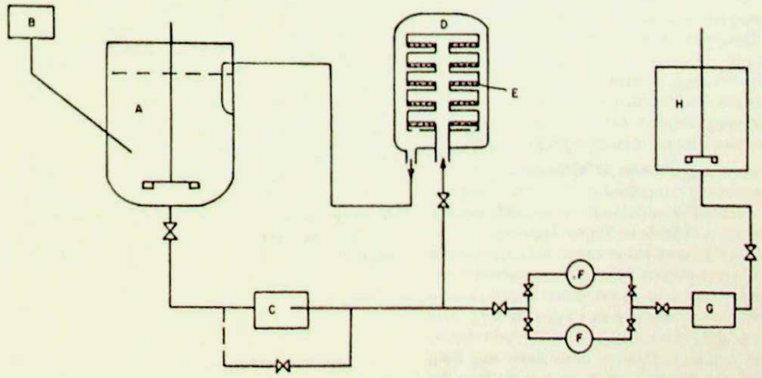

United States Patent [19]
Feder et al.
[11] **4,201,845**
[45] **May 6, 1980**

[54] **CELL CULTURE REACTOR**

[75] Inventors: **Joseph Feder**, University City, Mo.; **Katharine Ku**, San Francisco, Calif.; **Mau-Jung Ku**, Creve Coeur, Mo.

[73] Assignee: **Monsanto Company**, St. Louis, Mo.

[21] Appl. No.: **875,464**

[22] Filed: **Feb. 6, 1978**

Related U.S. Application Data

[63] Continuation-in-part of Ser. No. 676,100, Apr. 12, 1976, Pat. No. 4,087,327.

[51] **Int. Cl.**[2] **C12K 9/00**; C12B 1/10
[52] **U.S. Cl.** **435/285**
[58] **Field of Search** ..... 195/127, 139, 1.7, 1.8; 210/23, 321, 500 M

[56] **References Cited**

U.S. PATENT DOCUMENTS

3,342,729	9/1967	Strand	210/23
3,746,175	7/1973	Markley	210/321
3,821,087	6/1974	Knazek et al.	195/127
3,843,454	10/1974	Weiss	195/127
3,883,393	5/1975	Knazek et al.	195/1.8
3,997,396	12/1976	Delente	195/1.8

OTHER PUBLICATIONS

Williams, et al., "A Hollow Filament Fabric Blood Oxygenator," Chp. 31, *Proceedings of the Artificial Heart Conference*, Heggeli ed., National Heart Institute, N.I.H., Bethesda, (1969), pp. 365-371.
Schratter, "Synthetic Capillaries for Cell Culture," *American Laboratory*, vol. 6, No. 10, (1974), pp. 33-38.
Bulletin of Amicon Corporation, "Membrane Perfusion by Artificial Capillaries," (1975), Lexington, Mass.

Primary Examiner—Thomas G. Wiseman
Attorney, Agent, or Firm—Scott J. Meyer; James W. Williams, Jr.

[57] **ABSTRACT**

A cell culture reactor is provided for the growth of cells in vitro which employs elongate, selectively permeable hollow fibers arranged in a shallow layer configuration as a matrix for cell attachment on the outer surface of the fibers, and aeration of the cells by passage through the interior of said fibers and permeation of the membrane cell. The flow path of the culture media is directed by distributor plate means substantially uniformly through the fiber layer and substantially transverse to the plane of the elongate axes of the fibers.

10 Claims, 7 Drawing Figures

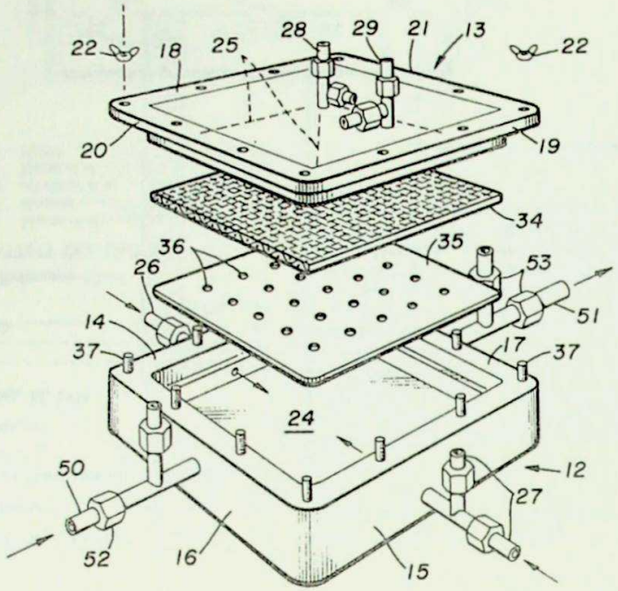

United States Patent [19]
Homer
[11] **4,198,482**
[45] **Apr. 15, 1980**

[54] **RAPID ASPIRATION SYSTEM FOR CULTURE MEDIA**

[75] Inventor: **Charles J. Homer**, Spring Valley, Calif.

[73] Assignee: **Dynasciences Corporation**, Los Angeles, Calif.

[21] Appl. No.: **917,714**

[22] Filed: **Jun. 21, 1978**

[51] **Int. Cl.**[2] **C12M 3/00**
[52] **U.S. Cl.** **435/284**; 435/292; 435/297; 435/298; 422/100
[58] **Field of Search** ..... 195/127, 142, 139; 422/100; 23/230 B; 435/284, 292, 297, 298

[56] **References Cited**

U.S. PATENT DOCUMENTS

3,568,735	3/1971	Lancaster	422/100 X
3,759,667	9/1973	Bannister et al.	422/100 X
3,772,154	11/1973	Isenberg et al.	23/230 B X
3,844,896	10/1974	Sharpe	195/139
3,992,265	11/1976	Hansen	195/127
4,125,436	11/1978	Liner	195/127
4,142,668	3/1979	Lee	422/100 X

Primary Examiner—R. B. Penland
Attorney, Agent, or Firm—Donald E. Nist

[57] **ABSTRACT**

The improved system of the present invention comprises a hand manipulatable first manifold comprising a hollow housing and a plurality of stubs connected to said housing at spaced intervals, extending outwardly from said housing and defining openings communicating with the interior of the housing. The stubs have at their free outer ends removable suction cups having central openings in communication with the stub openings. This manifold also includes suction means in the form of tubing connected to the hollow handle portion of the housing for providing suction to the housing, and suction-relieving means in the form of a hand-openable closure releasably sealing an opening in the handle. This manifold permits the simultaneous removal of the covers from a plurality of petri dishes or the like culture-containing reservoirs, by means of the suction cups.

A second manifold is provided which also can be hand held and which comprises a hollow housing having a plurality of aspiration conduits connected to the housing at spaced intervals, extending outwardly from the housing and communicating with the interior of the housing. The aspiration conduits terminate in removable pipettes for aspirating culture media from the reservoirs once the covers have been removed by the first manifold. The number of pipettes is equal to the number of suction cups and the spatial arrangement of the pipettes is the same as that of the cups.

5 Claims, 2 Drawing Figures

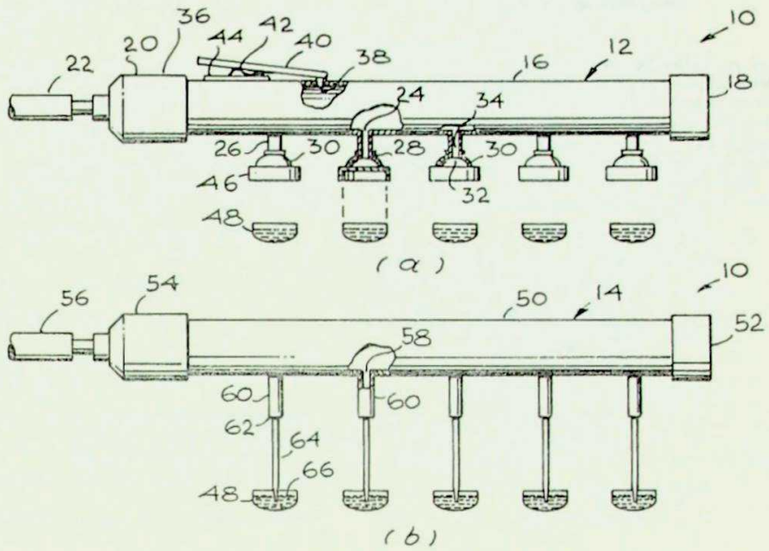

United States Patent [19]
Tolbert et al.
[11] **4,184,916**
[45] **Jan. 22, 1980**

[54] **CONTINUOUS CELL CULTURE SYSTEM**

[75] Inventors: **William R. Tolbert**, Manchester; **Joseph Feder**, University City; **Richard C. Kimes**, Creve Coeur, all of Mo.

[73] Assignee: **Monsanto Company**, St. Louis, Mo.

[21] Appl. No.: **918,898**

[22] Filed: **Jun. 26, 1978**

Related U.S. Application Data

[62] Division of Ser. No. 850,987, Nov. 14, 1977.

[51] **Int. Cl.**[2] **C12K 9/00**
[52] **U.S. Cl.** **435/241**; 435/286
[58] **Field of Search** 195/1.8

[56] **References Cited**

U.S. PATENT DOCUMENTS

2,829,931	4/1958	DePree et al.	308/36.1
2,958,517	11/1960	Harker et al.	259/122
3,039,932	6/1962	McLimans et al.	195/1.8
3,241,675	3/1966	Pashaian et al.	210/73
3,572,651	3/1971	Harker	259/107
3,580,812	5/1971	Bender et al.	195/143
3,622,129	11/1971	Mazowski	259/107
3,647,632	3/1972	Johnson et al.	195/143
3,649,465	3/1972	Scharf et al.	195/143
3,850,748	11/1974	Cook et al.	195/1.8
3,905,865	9/1975	McAleer et al.	195/1.8
4,059,485	11/1977	Tolbert et al.	195/1.8

OTHER PUBLICATIONS

Glinos et al-J. Cell Physiol. vol. 79 (1971) pp. 79-80.
Himmelfarb et al-Science vol. 164 (May 2, 1969) pp. 555-557.
Thayer et al-Cancer Research vol. 30 (Jun. 1970) pp. 1709-1714.
Cook et al-In Vitro vol. 9 No. 5 (1974) pp. 318-322.
Lynn et al-Biotech, Bioeng. vol. XVII (1975) pp. 659-673.

Primary Examiner—Sam Rosen
Attorney, Agent, or Firm—Scott J. Meyer; James W. Williams, Jr.

[57] **ABSTRACT**

A cell culture system and apparatus is provided for the suspension culturing of mammalian cells in which fresh media can be added and spent medium filtered and withdrawn on a continuous or semi-continuous basis without cell disruption. The apparatus comprises a hollow flask assembly having a hollow shaft means journaled for rotation in a stationary sleeve sub-assembly and a filter unit suspended downwardly therefrom, said filter unit being in fluid communication with the top opening of the flask through the interior of said hollow shaft means and adapted for coaxial rotation with said shaft means.

1 Claim, 5 Drawing Figures

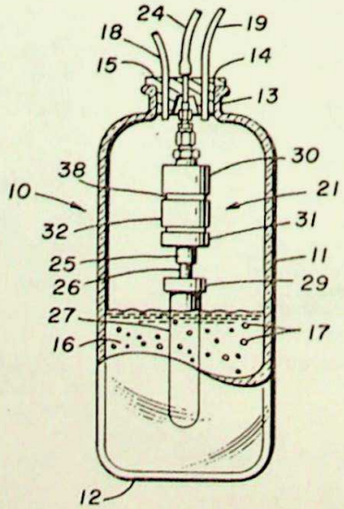

United States Patent [19]
Knazek et al.
[11] **4,184,922**
[45] **Jan. 22, 1980**

[54] **DUAL CIRCUIT, WOVEN ARTIFICIAL CAPILLARY BUNDLE FOR CELL CULTURE**

[75] Inventors: **Richard A. Knazek**; **Pietro M. Gullino**, both of Bethesda, Md.; **David S. Frankel**, Newark, Del.

[73] Assignee: **The Government of the United States**, Washington, D.C.

[21] Appl. No.: **850,810**

[22] Filed: **Nov. 11, 1977**

[51] **Int. Cl.**[2] **C12K 1/10**; C12K 9/00
[52] **U.S. Cl.** **435/284**; 435/241; 435/283; 435/1
[58] **Field of Search** 195/127

[56] **References Cited**

U.S. PATENT DOCUMENTS

3,732,149	5/1973	Santero	195/127 X
3,740,321	6/1973	Pagano et al.	195/127
3,821,087	6/1974	Knazek et al.	195/127
3,827,943	8/1974	Mann	195/127
3,843,454	10/1974	Weiss	195/127
3,847,749	11/1974	Smith et al.	195/127
3,853,712	12/1974	House et al.	195/127
3,883,393	5/1975	Knazek et al.	195/1.8

OTHER PUBLICATIONS

Michael Russ; Mass Transfer by Connection and Diffusion in an Artificial Capillary System; Graduate Thesis, Jun. 1976.

Primary Examiner—Raymond N. Jones
Assistant Examiner—Robert J. Warden
Attorney, Agent, or Firm—Holman & Stern

[57] **ABSTRACT**

An artificial capillary cell culture device having two separate perfusion circuits, and with the ultrafiltration fibers of the two circuits being woven into a single bundle, is disclosed. The present device provides a matrix for high density growth of cultured cells in a continuous perfusion system. The device is particularly well adapted for the use of pressure differences between perfusion circuits, such as in the simulation of lymphatic drainage.

2 Claims, 4 Drawing Figures

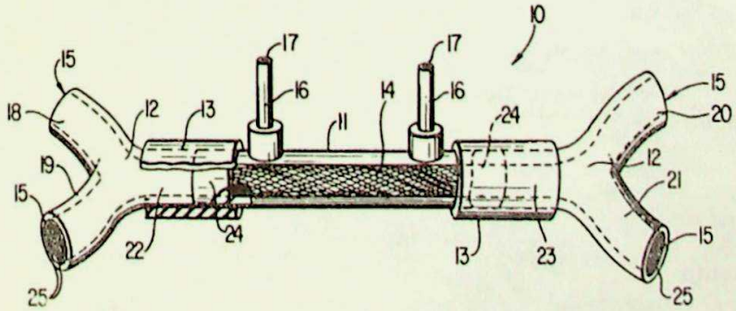

United States Patent [19]

Iizuka

[11] **4,228,243**

[45] **Oct. 14, 1980**

[54] **CELL CULTURE PROPAGATION APPARATUS**

[75] Inventor: **Masahiko Iizuka**, Fujisawa, Japan

[73] Assignee: **Toray Industries, Inc.**, Tokyo, Japan

[21] Appl. No.: **924,221**

[22] Filed: **Jul. 13, 1978**

Related U.S. Application Data

[63] Continuation of Ser. No. 742,250, Nov. 16, 1976, abandoned.

[51] **Int. Cl.**[2] **C12M 3/04**

[52] **U.S. Cl.** **435/285**; 435/310; 435/240

[58] **Field of Search** 435/285, 310, 809

[56] **References Cited**

U.S. PATENT DOCUMENTS

3,575,813	4/1971	Rothmayr	435/310
3,576,721	4/1971	Mason	435/809
3,928,142	12/1975	Smith	435/287

Primary Examiner—Alvin E. Tanenholtz
Attorney, Agent, or Firm—Miller & Prestia

[57] **ABSTRACT**

Apparatus and method for propagating tissue culture cells. A plurality of spaced-apart, parallel flat plates are assembled. The cells are grown between the plates. Gases or liquid media may be introduced between the plates.

1 Claim, 10 Drawing Figures

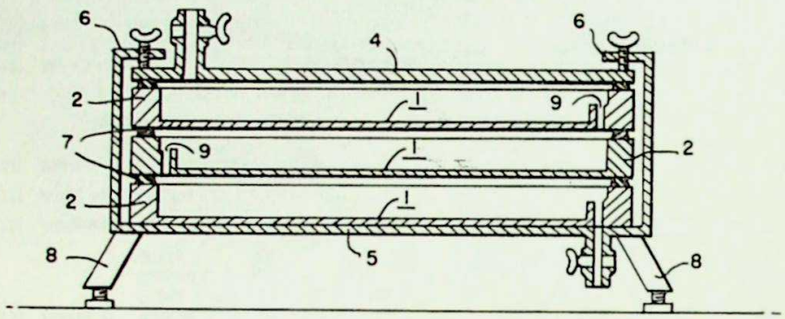

United States Patent [19]

Sogi et al.

[11] **4,198,483**

[45] **Apr. 15, 1980**

[54] **PIPETTE EXCHANGE APPARATUS**

[75] Inventors: **Shinroku Sogi**; **Makoto Yoshinaga**, both of Hachioji; **Toshio Shinohara**, Chofu; **Ikuo Tawara**, Hachioji, all of Japan

[73] Assignee: **Olympus Optical Company Limited**, Tokyo, Japan

[21] Appl. No.: **886,658**

[22] Filed: **Mar. 15, 1978**

Related U.S. Application Data

[63] Continuation-in-part of Ser. No. 777,336, Mar. 14, 1977, abandoned.

[51] **Int. Cl.**[2] **C12B 1/00**; C12K 1/10

[52] **U.S. Cl.** ..... **435/286**; 73/423 A; 422/63; 422/100

[58] **Field of Search** ..... 23/253 R, 259; 73/423 A; 195/127, 103.5; 422/63, 64, 65, 100

[56] **References Cited**

U.S. PATENT DOCUMENTS

3,175,734	3/1965	Heiss	23/253 R X
3,832,135	8/1974	Prozdowski et al.	23/253 R X
3,843,323	10/1974	Quame	23/259 X
4,087,248	5/1978	Miles	23/259 X

Primary Examiner—Michael S. Marcus
Attorney, Agent, or Firm—Toren, McGeady and Stanger

[57] **ABSTRACT**

A pipette exchange apparatus for use in a system for automatically culturing a biotissue or a cell includes a pipette mounting device for mounting a dividing and injecting means, a pipette supply device and a pipette feeding device.

3 Claims, 9 Drawing Figures

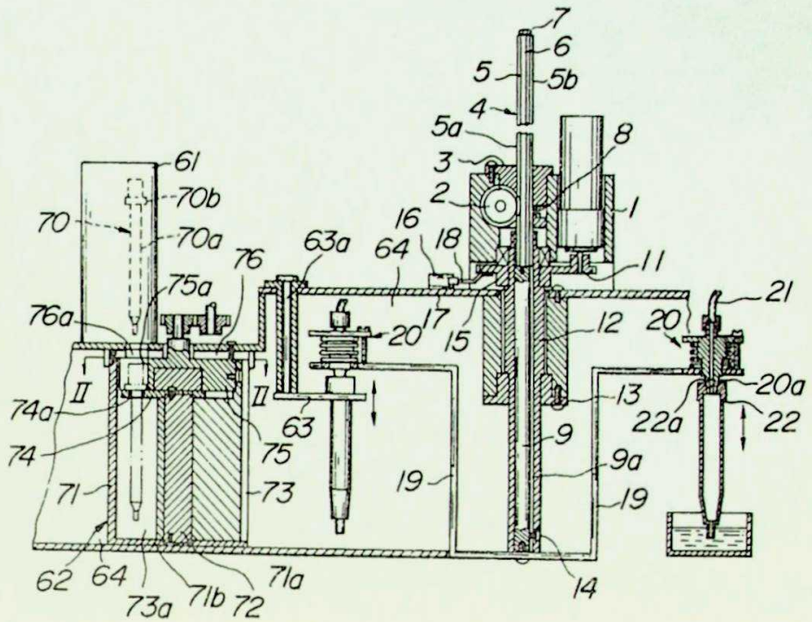

United States Patent [19]
Miller et al.
[11] **4,266,032**
[45] **May 5, 1981**

[54] **METHOD OF CULTURING MICROCARRIER SUPPORTED CELLS**

[75] Inventors: **Robert E. Miller**, Balwin; **Mau-Jung Kuo**, Creve Coeur; **Charles Lewis, Jr.**, Hazelwood, all of Mo.

[73] Assignee: **Monsanto Company**, St. Louis, Mo.

[21] Appl. No.: **65,652**

[22] Filed: **Aug. 10, 1979**

[51] **Int. Cl.**[3] **C12N 5/02**
[52] **U.S. Cl.** **435/241**; 435/286
[58] **Field of Search** 435/240, 241, 286

[56] **References Cited**

U.S. PATENT DOCUMENTS

3,816,261	6/1974	Torney	435/253
3,887,430	6/1975	Torney et al.	435/241
3,953,290	4/1976	Uthne et al.	435/240
4,055,466	10/1977	Torney	435/241

Primary Examiner—Alvin E. Tanenholtz
Attorney, Agent, or Firm—Scott J. Meyer; James W. Williams, Jr.

[57] **ABSTRACT**

A method of submerged cell culture is provided which employs a microcarrier support comprising cross-linked polystyrene resin beads derivatized with amino acids, peptides, or hydroxy carboxylic acids.

13 Claims, No Drawings

United States Patent [19]
Eisinger et al.
[11] **4,254,226**
[45] **Mar. 3, 1981**

[54] **PROCESS FOR GROWING HUMAN EPIDERMAL CELLS IN TISSUE CULTURE**

[75] Inventors: **Magdalena G. Eisinger**, Demarest, N.J.; **John M. Hefton**, New York, N.Y.

[73] Assignee: **Sloan Kettering Institute for Cancer Research**, New York, N.Y.

[21] Appl. No.: **75,378**

[22] Filed: **Sep. 13, 1979**

Related U.S. Application Data

[63] Continuation of Ser. No. 749, Jan. 2, 1979, abandoned.

[51] **Int. Cl.**[3] **C12N 5/00**
[52] **U.S. Cl.** **435/240**; 424/95; 435/1; 435/235
[58] **Field of Search** 435/240, 1; 424/95

[56] **References Cited**

PUBLICATIONS

Willmer, Cells & Tissue in Culture vol. 1, pp. 24 and 25 (1965).
Kitano et al., Biochemistry of Cutaneous Epidermal Differentiation, Ed. by Seiji pp. 319-335 (1977).
Eagle, Science vol. 174, pp. 501-503, Oct. 29, 1971.
Eagle et al., J. Cellular Physiology, vol. 82, No. 1, pp. 1-7, Aug. 1973.
Rheinwald et al., Cell, vol. 6, pp. 313-334, (Nov. 1975).

Primary Examiner—Alvin E. Tanenholtz
Attorney, Agent, or Firm—Sprung, Felfe, Horn, Lynch & Kramer

[57] **ABSTRACT**

Human epidermal cells are grown in tissue culture by separating the epidermis in human skin from the dermis, dissociating the epidermis into epidermal cells, and growing the epidermal cells in a tissue culture medium having a pH of from about 5.6 to about 5.8.

12 Claims, No Drawings

United States Patent [19]
Yokoyama et al.
[11] **4,186,253**
[45] **Jan. 29, 1980**

[54] **PERFUSATE FOR PRESERVING ORGAN TO BE TRANSPLANTED AND PRESERVING METHOD**

[75] Inventors: **Kazumasa Yokoyama**, Toyonaka; **Masakazu Iwai**, Matsubara; **Hiroyuki Okamoto**, Akashi; **Noboru Yamada**, Amagasaki, all of Japan

[73] Assignee: **The Green Cross Corporation**, Osaka, Japan

[21] Appl. No.: **950,071**

[22] Filed: **Oct. 10, 1978**

[51] **Int. Cl.**[2] **C12B 3/00**; A61K 31/025
[52] **U.S. Cl.** **435/240**; 424/352
[58] **Field of Search** 195/1.7; 424/352

[56] **References Cited**

U.S. PATENT DOCUMENTS

3,911,138	10/1975	Clark	424/352
3,962,439	6/1976	Yokoyama	424/352

Primary Examiner—Sam Rosen
Attorney, Agent, or Firm—Cushman, Darby & Cushman

[57] **ABSTRACT**

An organ to be transplanted, such as kidney, can effectively be preserved by perfusion for a considerably long time by the use of a perfusate which is made by mixing a Ringer's solution modified by increasing potassium ion to 8-20 meq/l, a stable perfluorocarbon compound emulsion and albumin, so that the concentration of the perfluorocarbon compound is 7.5 to 12.5% (W/V) and that of albumin is 1-8% (W/V) based on the perfusate.

16 Claims, No Drawings

United States Patent [19]
Grabner et al.
[11] **4,264,739**
[45] **Apr. 28, 1981**

[54] **SPARGER FOR CELL CULTURE SYSTEM**

[75] Inventors: **Roy Grabner**, Blue Bell; **Edgar Scattergood**, Lansdale; **Miguel O. Villarejos**, Norristown, all of Pa.

[73] Assignee: **Merck & Co., Inc.**, Rahway, N.J.

[21] Appl. No.: **1,245**

[22] Filed: **Jan. 5, 1979**

[51] **Int. Cl.**[3] **C12N 5/02**
[52] **U.S. Cl.** **435/241**; 435/309; 435/313; 435/818; 261/124
[58] **Field of Search** 195/127, 139, 142; 261/122, 124; 435/313, 818, 309, 240, 241

[56] **References Cited**

U.S. PATENT DOCUMENTS

1,920,719	8/1933	Stich	195/142
1,959,554	5/1934	Stich	435/313 X
2,305,796	12/1942	Seidel	195/142 X
2,981,660	4/1961	Achorn et al.	195/142
3,035,702	5/1962	Marvin	210/169
3,407,120	10/1968	Weiss et al.	195/142 X
3,424,433	1/1969	Thayer	261/123
3,711,072	1/1973	Waldenville	261/122
3,853,712	12/1974	House et al.	195/142
3,923,605	12/1975	Gedde	195/142
4,017,565	4/1977	Muller	195/142 X
4,051,204	9/1977	Muller et al.	195/142 X

OTHER PUBLICATIONS

Weiss et al., "Multisurface Tissue Propagator for Mass Scale Growth of Cell Monolayers" Biotechnology & Bioengineering, vol. X, pp. 601-615 (1968).
Taylor et al., "Evaluation of Dyna Cell Vessel for Production of Surface Substrate Dependent Cells" Biotechnology & Bioengineering, vol. XVII, pp. 1847-1852 (1975).

Primary Examiner—R. B. Penland
Attorney, Agent, or Firm—Donald J. Perrella; Hesna J. Pfeiffer

[57] **ABSTRACT**

A sparger for mass cell culture systems is formed from an elongated tube having a plurality of ports.

9 Claims, 1 Drawing Figure

STARCH HYDROLYSATES

This profile includes processes for synthesizing monosaccharides by the action of an enzyme or microorganism, and for preparing products by the action of exo-1.4 alpha glucosidase, isomerase, beta-amylase, alpha-1, 6-glucosidase, glycosyl transferase or carbohydrase enzymes. Examples of reactions are the enzymatic isomerization of glucose to fructose and the enzymatic hydrolysis of starch to glucose.

INCLUDED IN THIS PROFILE ARE ALL OF THE PATENTS FROM:

Class 435, Subclasses 94-99 and 105

ACTIVITY INDICES (1979-1981)

GROWTH	28.2%
FOREIGN SHARE	41.9%
CORPORATE OWNED	100.0%
GOVERNMENT OWNED	0.0%
U.S. OWNED OF FOREIGN	29.0%

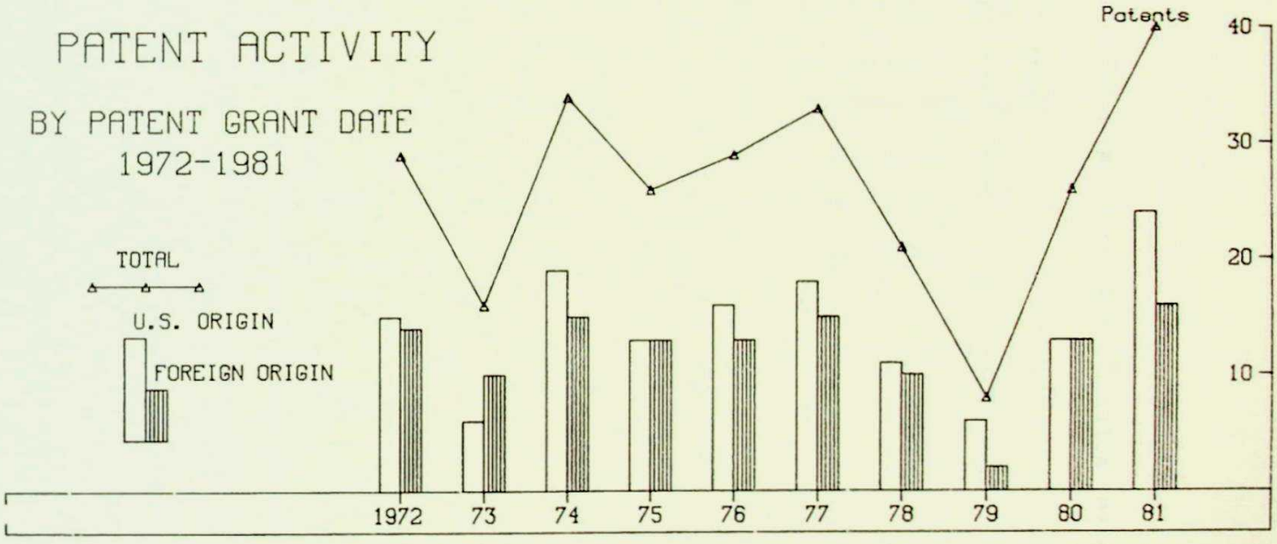

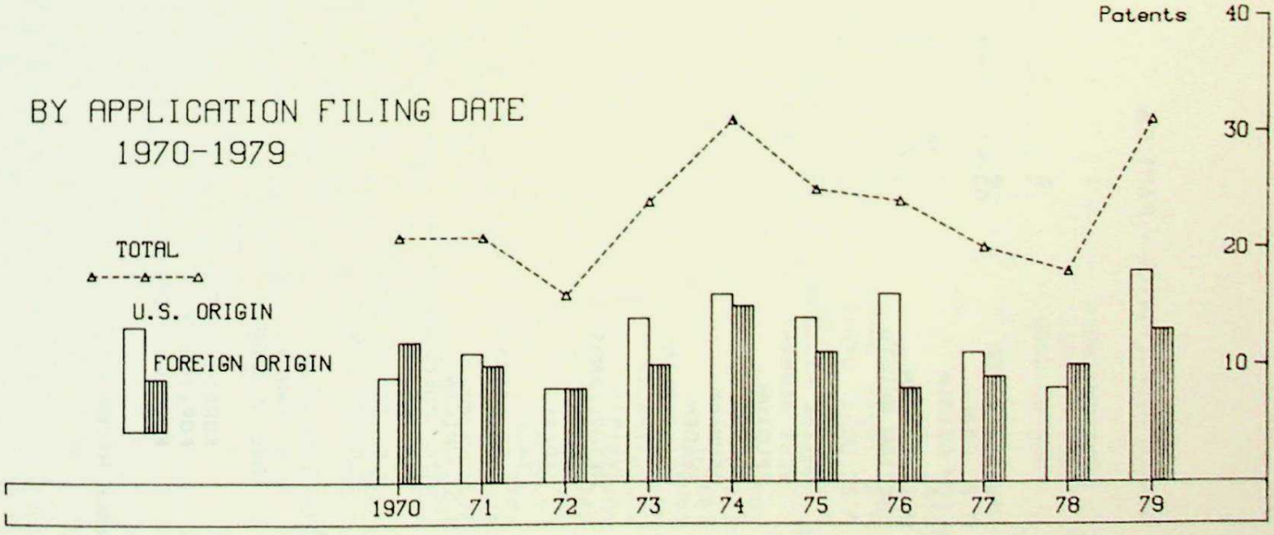

STARCH HYDROLYSATES – PART 2A

PATENT ACTIVITY (1/63-12/81) BY DATE OF PATENT GRANT

	NUMBER OF PATENTS															
	63-67	1968	1969	1970	1971	1972	1973	1974	1975	1976	1977	1978	1979	1980	1981	TOTAL
TOTAL	34	5	6	10	18	29	16	34	26	29	33	21	8	26	40	335
U.S. ORIGIN	27	4	4	9	13	15	6	19	13	16	18	11	6	13	24	198
FOREIGN ORIGIN	7	1	2	1	5	14	10	15	13	13	15	10	2	13	16	137
JAPAN	4	1	2	1	3	12	9	11	6	8	7	6	1	3	9	83
UNITED KINGDOM	1					1		3	2		3	1		2		13
WEST GERMANY	2				1		1		1	1	1			1	1	9
BELGIUM									1		2			4		7
FRANCE									1	2	1			1	2	7
DENMARK					1				2		1			2		6
SWEDEN						1				1					1	3
SWITZERLAND												2				2
AUSTRALIA												1				1
AUSTRIA								1								1
NETHERLANDS															1	1
CANADA													1			1
ISRAEL															1	1
ITALY															1	1
EAST GERMANY										1						1
U.S. ORIGIN	27	4	4	9	13	15	6	19	13	16	18	11	6	13	24	198
U.S. CORP. OWNED	24	3	4	8	12	14	4	19	12	14	13	9	6	13	24	179
U.S. GOVT. OWNED					1	1	1			1	1	1				6
U.S. INDIV. OWNED	3			1			1		1		3	1				10
FOREIGN OWNED		1								1	1					3
FOREIGN ORIGIN	7	1	2	1	5	14	10	15	13	13	15	10	2	13	16	137
U.S. OWNED	1				1			1	1	2	2	1		4	5	18
FOREIGN OWNED	6	1	2	1	4	14	10	14	12	11	13	9	2	9	11	119
FOREIGN CORP.	5	1	2	1	3	13	10	13	11	11	13	7	2	9	11	112
FOREIGN GOVT.																
FOREIGN INDIV.	1				1	1		1	1			2				7

STARCH HYDROLYSATES

PATENT ACTIVITY (PATENTS GRANTED 1/67-12/81) BY DATE OF PATENT APPLICATION

	NUMBER OF PATENTED APPLICATIONS															
	PRE 68	1968	1969	1970	1971	1972	1973	1974	1975	1976	1977	1978	1979	1980	1981	TOTAL
TOTAL	38	16	24	21	21	16	24	31	25	24	20	18	31	6		315
U.S. ORIGIN	31	12	10	9	11	8	14	16	14	16	11	8	18	4		182
FOREIGN ORIGIN	7	4	14	12	10	8	10	15	11	8	9	10	13	2		133
JAPAN	6	3	11	10	9	6	2	9	7	2	4	2	8	2		81
UNITED KINGDOM			2			2	2	1	2	1	1	1				12
WEST GERMANY	1	1		1			2	1			1	1				8
BELGIUM								1	1	1		2	2			7
FRANCE							1	2	1		1	1	1			7
DENMARK			1				2			1	2					6
SWEDEN				1				1				1				3
SWITZERLAND										2						2
AUSTRALIA										1						1
AUSTRIA					1											1
NETHERLANDS													1			1
CANADA												1				1
ISRAEL													1			1
ITALY												1				1
EAST GERMANY							1									1
U.S. ORIGIN	31	12	10	9	11	8	14	16	14	16	11	8	18	4		182
U.S. CORP. OWNED	28	11	10	8	9	7	14	14	10	13	11	8	18	4		165
U.S. GOVT. OWNED		1		1	1			1		2						6
U.S. INDIV. OWNED	2				1	1		1	2	1						8
FOREIGN OWNED	1								2							3
FOREIGN ORIGIN	7	4	14	12	10	8	10	15	11	8	9	10	13	2		133
U.S. OWNED	1		2					2	3	1		2	7			18
FOREIGN OWNED	6	4	12	12	10	8	10	13	8	7	9	8	6	2		115
FOREIGN CORP.	5	3	11	12	10	7	9	13	8	5	9	8	6	2		108
FOREIGN GOVT.																
FOREIGN INDIV.	1	1	1			1	1			2						7

STARCH HYDROLYSATES

Organizational Patenting: Ranked

NO. OF PATENTS	ASSIGNEES WITH 2 OR MORE PATENTS (1969-1981)
47	CPC INTERNATIONAL INC.
23	HAYASHIBARA CO.
21	STANDARD BRANDS INC.
18	A. E. STALEY MANUFACTURING CO.
8	R. J. REYNOLDS TOBACCO CO.
7	AGENCE NATIONALE DE VALORISATION DE LA RECHERCHE (ANVAR)
7	ANHEUSER-BUSCH, INC.
7*	HAYASHIBARA BIOCHEMICAL LABORATORIES INC.
5	NOVO INDUSTRI A/S
5	MILES LABORATORIES INC.
4	KYOWA HAKKO KOGYO CO., LTD.
4	CORNING GLASS WORKS
4	MONSANTO CO.
4	PENICK + FORD LTD.
4*	MEIJI SEIKA KAISHA LTD.
3	GLAXO LABORATORIES LTD.
3	TANABE SEIYAKU CO. LTD.
3	TAKEDA CHEMICAL INDUSTRIES LTD.
3	CHEVRON RESEARCH CO.
3	BAXTER TRAVENOL LABS., INC.
3	IMPERIAL CHEMICAL INDUSTRIES LTD.
3	NATIONAL DISTILLERS AND CHEMICAL CORP.
3	GRAIN PROCESSING CORPORATION
3*	PURDUE RESEARCH FOUNDATION
2	GREAT WESTERN SUGAR CO.
2	DENKI KAGAKU KOGYO KABUSHIKI KAISHA
2	BAYER AKTIENGESELLSCHAFT
2	BATTELLE MEMORIAL INSTITUTE
2	RESEARCH CORPORATION
2	RIKAGAKU, KENKYUSHO
2	MITSUBISHI CHEMICAL INDUSTRIES LTD.
2	UNITED STATES OF AMERICA, DEPT. OF ENERGY
2	UNITED STATES OF AMERICA, ARMY
2	DOW CHEMICAL CO.
2	ICI AMERICAS INC.
2	ROHM & HAAS CO.
2	ROQUETTE FRERES

*Composite Total. See Appendix A.

ORGANIZATIONAL PATENTING (1/69-12/81) - - ALPHA LISTING

AB STADEX
3996107 - ENZYMATIC PRODUCTION OF A STARCH CONVERSION PRODUCT HAVING A HIGH MALTOSE CONTENT

A. E. STALEY MANUFACTURING COMPANY
3490922 - PROCESS FOR PREPARING LOW D.E. SYRUPS
3532602 - PROCESS FOR REDUCING VISCOSITY OF STABILIZED STARCH SOLUTIONS
3551293 - METHOD FOR ENZYMATICALLY HYDROLYZING STARCH
3556942 - METHOD FOR OBTAINING AMYLOSE FROM COOKED STARCH SOLUTIONS
3616219 - PROCESS FOR IMPROVED ENZYME CONVERTIBILITY OF STARCH
3616220 - METHOD FOR PREPARING LOW D. E. STARCH HYDROLYZATES
3630844 - STARCH CONVERSION SYRUPS
3709788 - BLEACHED STARCH COMPOSITION OF IMPROVED ENZYME CONVERTIBILITY AND PROCESS FOR USE THEREOF
3720583 - ENZYME HYDROLYSIS
3783100 - NON-RETROGRADED THINNED HYDROLYZATES
3791865 - HIGH MALTOSE SYRUPS
3806415 - THINNING AND SACCHARIFICATION OF STARCH PASTES WITH GLUCOAMYLASE
3897305 - PROCESS FOR PRODUCING DEXTROSE
3956066 - GLUCOSE ISOMERIZING ENZYME
3963575 - PRODUCING PULLULANASE WITH ORGANISMS HAVING A SUPERIOR CAPACITY TO ELABORATE PULLULANASE
4026764 - DRY ISOMERASE ACTIVATION
4052226 - DIRECTED ENZYMOLYSIS OF STARCH
4113565 - GLUCOSE ISOMERIZATION WITH IRON ION-THIOL ACTIVATOR ION-GLUCOSE ISOMERASE SYSTEMS

AGENCE NATIONALE DE VALORISATION DE LA RECHERCHE (ANVAR)
3616221 - ENZYMA METHOD FOR CONVERTING GLUCOSE IN GLUCOSE SYRUPS TO FRUCTOSE
3689362 - ENZYMATIC METHOD FOR MANUFACTURE OF FRUCTOSE
3715276 - ENZYMATIC METHOD FOR MANUFACTURE OF FRUCTOSE FROM GLUCOSE
3753858 - METHOD OF CONVERTING GLUCOSE INTO FRUCTOSE
3981773 - PROCESS FOR THE PREPARATION OF GALACTOSE AND BEVERAGES BASED ON GALACTOSE FROM SOLUTIONS CONTAINING LACTOSE
3992260 - METHOD FOR INCREASING YIELD OF SUCROSE
3992261 - METHOD FOR MANUFACTURE OF MALTOSE FROM STARCH BY ENZYMES CO-PRODUCED BY A SINGLE MICROORGANISM

AKADEMIE DER WISSENSCHAFTEN DER DDR
3962465 - METHOD OF PRODUCING STARCH HYDROLYSIS PRODUCTS FOR USE AS A FOOD ADDITIVES

AMALGAMATED SUGAR COMPANY
4247636 - PROCESS FOR PRODUCING A HIGH FRUCTOSE SWEETENER, HIGH PROTEIN MEAL, AND CEREAL GERM OILS

AMERACE CORPORATION
4102746 - IMMOBILIZED PROTEINS

AMERICAN CRYSTAL SUGAR COMPANY
4263052 - PRODUCTION OF FRUCTOSE AND USEFUL BY-PRODUCTS

AMERICAN CYANAMID COMPANY
4138481 - ANTIBIOTIC BL580+66 +O AND METHOD OF USE

AMSTAR CORPORATION
4062728 - STARCH THINNING PROCESS

ANHEUSER-BUSCH, INCORPORATED
3813320 - METHODS OF MAKING GLUCOSE ISOMERASE AND OF COVERTING GLUCOSE TO FRUCTOSE
3834988 - METHOD OF MAKING GLUCOSE ISOMERASE AND USING SAME TO CONVERT GLUCOSE TO FRUCTOSE
3992262 - MEDIA CONTAINING MOLASSES AND CORN STEEP LIQUOR FOR PRODUCING GLUCOSE ISOMERASE FROM ACTINOPLANES AND METHOD
4035235 - METHOD OF MAKING LIPOPHILIC STARCH DERIVATIVES
4208482 - IMMOBILIZATION OF GLUCOSE ISOMERASE

ORGANIZATIONAL PATENTING (1/69-12/81) - - ALPHA LISTING

ANHEUSER-BUSCH, INCORPORATED (CONTINUED)
4230802 - UNREFINED GLUCOSE SYRUP AS SUBSTRATE BY GLUCOSE ISOMERIZING ENZYME IN PRODUCING FRUCTOSE FROM GLUCOSE
4242451 - METHOD OF TREATMENT OF FLOCCULATED HOMOGENATE OF MICROBIAL CELLS CONTAINING GLUCOSE ISOMERASE

BATTELLE MEMORIAL INSTITUTE
4016044 - METHOD AND APPARATUS FOR GOVERNING THE REACTION RATE OF ENZYMATIC REACTIONS
4088538 - REVERSIBLY PRECIPITABLE IMMOBILIZED ENZYME COMPLEX AND A METHOD FOR ITS USE

BAXTER TRAVENOL LABORATORIES, INC.
3708397 - SYRUP CONVERSION WITH IMMOBILIZED GLUCOSE ISOMERASE
3843442 - IMMOBILIZED GLUCOSE ISOMERASE
3966543 - ENZYME-TREATED PAPER

BAYER AKTIENGESELLSCHAFT
3879546 - SACCHARASE INHIBITORS
4013510 - GLYCOSIDE-HYDROLASE ENZYME INHIBITORS

BIO RESEARCH CENTER CO., LTD.
3990945 - ENZYMATIC HYDROLYSIS OF CELLULOSE

BOHSEI ENTERPRISE, LTD.
4302475 - METHOD OF PRODUCING MILO STARCH

CETUS CORPORATION
4246347 - PROCESS FOR THE PRODUCTION OF FRUCTOSE

CHEVRON RESEARCH COMPANY
4110475 - CELLULOSE FERMENTATION PROCESS
4209590 - CELLULOSE FERMENTATION PROCESS
4266033 - CELLULOSE FERMENTATION PROCESS

CORNING GLASS WORKS
3868304 - METHOD OF MAKING FRUCTOSE WITH IMMOBILIZED GLUCOSE ISOMERASE
3939041 - METHOD OF MAKING FRUCTOSE
3965035 - ENZYME CARRIER REGENERATION
3982997 - IMMOBILIZED GLUCOSE ISOMERASE

CORN PRODUCTS COMPANY
3425910 - PRODUCTION OF CYCLODEXTRIN

CPC INTERNATIONAL INC.
3535123 - HIGH DE STARCH HYDROLYSATE SYRUPS AND METHOD OF PREPARATION
3549496 - PROCESS FOR MAKING HIGH MALTOSE SYRUP
3560343 - LOW D.E. STARCH CONVERSION PRODUCTS
3565765 - PREPARATION OF HIGH MALTOSE CONVERSION PRODUCTS
3622463 - PRODUCTION OF EXTRACELLULAR GLUCOSE ISOMERASE BY STREPTOMYCES
3640847 - PROCEDURE FOR PRODUCTION OF ALPHA-CYCLODEXTRIN
3652398 - PRODUCTION OF CYCLODEXTRIN FROM GRANULAR MODIFIED STARCHES
3654082 - PRODUCTION OF HIGH MALTOTETRAOSE SYRUP
3663372 - METHOD OF PREPARING A DRIED GLUCOAMYLASE PREPARATION
3756919 - PROCESS FOR THE PRODUCTION OF NON-HAZING STARCH CONVERSION SYRUPS
3782964 - METHOD OF UPGRADING STARCH-CONTAINING CRUDE GLUTEN
3813318 - PRODUCTION OF XYLOSE (DEXTROSE) ISOMERASE ENZYME PREPARATIONS
3826714 - THERMOPHILIC GLUCOSE ISOMERASE ENZYME PREPARATION
3847740 - PROCESS FOR THE PRODUCTION OF LEVULOSE-BEARING SYRUPS
3847741 - TEMPERATURE-PROGRAMMED PROCESS FOR THE PRODUCTION OF LEVULOSE-BEARING SYRUPS

ORGANIZATIONAL PATENTING (1/69-12/81) - - ALPHA LISTING

(CONTINUED)

CPC INTERNATIONAL INC.
3849194 - LOW D.E. STARCH CONVERSION PRODUCTS
3853706 - PROCESS FOR PRODUCING NON-WAXY STARCH HYDROLYSATES
3910821 - ENZYMATIC ISOMERIZATION PRODUCT
3922196 - ENZYMATIC HYDROLYSIS OF GRANULAR STARCH
3922197 - PROCESS FOR CONVERTING GRANULAR STARCH TO DEXTROSE
3922198 - PROCESS FOR CONVERTING GRANULAR STARCH TO DEXTROSE
3922199 - ENZYMATIC HYDROLYSIS OF GRANULAR STARCH
3922200 - ENZYMATIC HYDROLYSIS OF GRANULAR STARCH
3922201 - PREPARATION OF LEVULOSE FROM GRANULAR STARCH
3935070 - PRODUCTION OF SWEET SYRUP FROM DEXTROSE MOTHER LIQUOR
3956065 - INERT, NON-POROUS GRANULES FOR FLOW CONTROL IN A PLUG FLOW REACTOR
3960663 - PROCESS FOR THE CONTINUOUS ISOMERIZATION OF DEXTROSE
3974032 - LOW D.E. STARCH HYDROLYSATES OF IMPROVED STABILITY PREPARED BY ENZYMATIC HYDROLYSIS OF DEXTRINS
3974033 - MALTO-DEXTRINS OF IMPROVED STABILITY PREPARED BY ENZYMATIC HYDROLYSIS OF OXIDIZED STARCH
3974034 - MALTO-DEXTRINS OF IMPROVED STABILITY PREPARED BY ENZYMATIC HYDROLYSIS OF OXIDIZED STARCH
4009074 - PREPARATION OF LEVULOSE FROM GRANULAR STARCH
4040861 - PROCESS OF REFINING ENZYMATICALLY PRODUCED LEVULOSE SYRUPS
4100025 - METHOD OF TREATING A DEXTROSE SOLUTION
4113509 - ENZYMATICALLY PRODUCED MALTOSE-MALTOTRIOSE STARCH HYDROLYSATE
4132595 - DEXTROSE PRODUCTION WITH IMMOBILIZED GLUCOAMYLASE
4199372 - PROCESS FOR PREPARING MALTOSE-CONTAINING STARCH HYDROLYZATE AND CRYSTALLIZATION OF MALTOSE THEREFROM
4202939 - GLUCOAMYLASE IMMOBILIZED ON CATIONIC COLLOIDAL SILICA
4217413 - NOVEL MALTULOSE-CONTAINING SYRUPS AND PROCESS FOR MAKING THE SAME
4217414 - PROCESS FOR SEPARATING AND RECOVERING VITAL WHEAT GLUTEN FROM WHEAT FLOUR AND THE LIKE
4226937 - METHOD USING GLUCOAMYLASE IMMOBILIZED ON POROUS ALUMINA
4235965 - STARCH HYDROLYSIS AT HIGH DRY SUBSTANCE
4247637 - HIGHLY THERMOSTABLE GLUCOAMYLASE AND PROCESS FOR ITS PRODUCTION
4252899 - PROCESS FOR IMMOBILIZING GLUCOSE ISOMERASE AND A METHOD OF CONTINUOUS ISOMERIZATION OF GLUCOSE
4254225 - NOVEL NEUTRAL GLUCOAMYLASE AND METHOD FOR ITS PRODUCTION
4263400 - IMMOBILIZED ENZYMES
4276379 - PREPARATION OF HIGH FRUCTOSE SYRUPS FROM SUCROSE
4284722 - HEAT AND ACID-STABLE ALPHA-AMYLASE ENZYMES AND PROCESSES FOR PRODUCING THE SAME

DDS KROYER A/S
3910820 - METHOD OF MAKING STARCH HYDROLYSATES BY ENZYMATIC HYDROLYSIS

DENKI KAGAKU KOGYO KABUSHIKI KAISHA
3915797 - IMMOBILIZED ENZYMES
4205128 - PROCESS FOR PRODUCING IMMOBILIZED ENZYME COMPOSITIONS

DIAMOND SHAMROCK (POLYMERS) LIMITED
4217417 - RESIN CHELATES

DIRECTOR OF NATIONAL FOOD RESEARCH INSTITUTE
4001082 - METHOD OF ISOMERIZING GLUCOSE WITH ENZYME IMMOBILIZED WITHIN MICROBIAL CELL

DOW CHEMICAL COMPANY
4246350 - PROTEIN IMMOBILIZATION ON CHELATING RESINS
4308349 - ISOMERIZATION OF GLUCOSE TO FRUCTOSE USING GLUCOSE ISOMERASE FROM AMPULLARIELLA

E. I. DU PONT DE NEMOURS AND COMPANY
4039383 - PROCESS FOR PRODUCING MALTOPENTAOSE

ESCHER WYSS GMBH
4254150 - PROCESS FOR PRODUCING A FOODSTUFF OF CEREAL

ORGANIZATIONAL PATENTING (1/69-12/81) - - ALPHA LISTING

EXXON RESEARCH + ENGINEERING CO.
3616222 - PROCESS FOR SACCHARIFICATION OF CELLULOSIC AND WOODY TISSUES BY FUNGI OR ENZYMES FROM FUNGI

GENERAL FOODS CORPORATION
3565764 - SUGAR PRODUCTION FROM AMYLACEOUS MATERIALS

GIST-BROCADES N.V.
3838007 - WATER-INSOLUBLE ENZYME COMPOSITION

GLAXO LABORATORIES LIMITED
3697378 - DEXTRINIZATION OF STARCH WITH X-AMYLASE FROM BACILLUS COAGULANS
3880742 - BETA-1,4,/BETA1,3 GLUCANASE
4011136 - BIOCHEMICAL PROCESS

GRAIN PROCESSING CORPORATION
3663369 - HYDROLYSIS OF STARCH
4241183 - STARCH LIQUEFACTION PROCESS
4298400 - LOW D.E. STARCH CONVERSION PRODUCTS

GREAT WESTERN SUGAR COMPANY
4097333 - ENZYMATIC METHOD OF PRODUCING GLUCOSE FROM ETHYLENE TREATED CELLULOSE
4241185 - METHOD OF STABILIZING +60 -GALACTOSIDASE

HAYASHIBARA BIOCHEMICAL LABORATORIES INCORPORATED
3812011 - METHOD OF CONVERTING STARCH TO BETA-CYCLODEXTRIN
3832285 - METHOD OF PRODUCING MALTOSE OF HIGH PURITY
3988206 - HEAT STABLE CYCLODEXTRIN GLYCOSYLTRANSFERASE
4028186 - PROCESS FOR THE PRODUCTION OF SACCHARIFIED STARCH PRODUCTS

HAYASHIBARA COMPANY
3492203 - EXTRACTION OF BETA-AMYLASE FROM WHEAT BRAN
3632475 - PROCESS FOR PREPARING LONG-CHAIN AND SHORT-CHAIN AMYLOSES FROM STARCHES
3677896 - PROCESS FOR PREPARING CRYSTALLINE MALTOSE
3691013 - PROCESS FOR PRODUCING KETOSE
3692580 - PROCESS FOR THE PRODUCTION OF STARCH SYRUPS
3701714 - PROCESSES FOR THE PRODUCTION OF OLIGOSACCHARIDE HAVING FRUCTOSE MOLECULES ON THEIR REDUCING ENDS
3705039 - LOW CALORIE SWEETENER MIXTURE OF MALTITOL AND MALTOTRIITOL
3713978 - PROCESS FOR PREPARING POWDERY STARCH SUGARS
3721605 - PROCESS FOR PRODUCING AMYLOSE IN INDUSTRIAL SCALE
3728132 - PROCESS FOR THE PRODUCTION OF FOODS AND DRINKS
3729380 - PROCESS FOR PRODUCING LOW MOLECULAR AMYLOSE ON A COMMERCIAL BASIS
3730840 - PROCESS FOR PREPARING LOW MOLECULAR WEIGHT AMYLOSES
3766011 - METHODS FOR THE SEPARATION AND PURIFICATION OF AMYLOSES
3788946 - PROCESS FOR THE PREPARATION OF AMYLOSE AS THE SUBSTRATE FOR THE QUANTITATIVE ANALYSIS OF AMYLASE
3795584 - PROCESS FOR PRODUCING HIGH PURITY MALTOSE
3804715 - PROCESS FOR PREPARING SUGAR CONTAINING MALTOSE OF HIGH PURITY
3830697 - PROCESS FOR PRODUCING AMYLOSES
3838005 - METHODS FOR THE FRACTIONATION OF AMYLOSES
3838006 - PROCESS FOR PRODUCING HEAT-RESISTANT STARCH SYRUPS
3870704 - NITROGEN CONTAINING AMYLOSE DERIVATIVES
3881991 - PROCESS FOR PRODUCING AMYLOSE POWDERS HAVING A MEAN DEGREE OF POLYMERIZATION BETWEEN 20-30
4001435 - PROCESS FOR PREPARING FOODS AND DRINKS
4016038 - PROCESS FOR PREPARING MALTOSES FROM STARCHES

HIRAM WALKER SONS, INC.
3868307 - PRODUCTION OF DISTILLERS YEAST

ORGANIZATIONAL PATENTING (1/69-12/81) - - ALPHA LISTING

HOFFMANN-LA ROCHE INC.
3912592 - METHOD FOR PRODUCING L-SORBOSONE

HOKKAIDO SUGAR COMPANY, LTD.
4036694 - PROCESS FOR BEET SUGAR PRODUCTION

ICI AMERICAS INC.
4173514 - HIGH MANNITOL PROCESS (ENZYMATIC ISOMERIZATION)
4292451 - HIGH MANNITOL PROCESS (ALKALINE HYDROGENATION IN PRESENCE OF ALKALI METAL CARBONATE)

IMPERIAL CHEMICAL INDUSTRIES LIMITED
4059489 - PRODUCTION OF GLUCOSE ISOMERASE
4069104 - CONVERSION OF ALDOSE TO KETOSE IN THE PRESENCE OF OXYANIONS OR MIXED OXYANIONS OF TIN OR GERMANIUM
4234687 - +62 -GALACTOSIDASE

I.N.R.A.
4188466 - AUTOMATIC METHOD FOR THE DETERMINATION OF STARCH

KABUSHIKI KAISHA HAYASHIBARA SEIBUTSU KAGAKU KENKYUJO
4219571 - PROCESS FOR PRODUCING A SWEETENER
4254227 - PROCESSES FOR PRODUCING SYRUPS OF SYRUP SOLIDS CONTAINING FRUCTOSE-TERMINATED OLIGOSACCHARIDES

KABUSHIKI-KAISHA HAYASHIBARA SELBUTSUKAGAKU KENKYUJO
4032403 - PROCESS FOR THE PRODUCTION OF SACCHARIFIED STARCH PRODUCTS WHEREIN MALTOSE IS THE PREDOMINANT CONSTITUENT

KAYASHIBARA COMPANY
3703440 - PROCESS FOR THE PRODUCTION OF STARCH SYRUPS THAT HAVE FRUCTOSE ON THEIR MOLECULAR ENDS

KEN HAYASHIBARA
3819484 - PROCESS FOR PREPARING SUCROSE-STARCH SWEETENER FREE FROM REDUCING SUGAR

KOCH-LIGHT LABORATORIES LIMITED
4043869 - WATER INSOLUBLE BIOLOGICALLY ACTIVE MATERIAL

KOCKUMS CONSTRUCTION AB
4282319 - PROCESS FOR THE PREPARATION OF A HYDROLYZED PRODUCT FROM WHOLE GRAIN

KURTH MALTING CORPORATION
4251630 - PREPARATION OF MALT HIGH IN ALPHA-1,6-HYDROLASE

KYOWA HAKKO KOGYO CO., LTD
3458401 - PROCESS FOR THE FERMENTATIVE PRODUCTION OF D-RIBOSE PHOSPHATES
3637461 - PROCESS FOR PRODUCING FATTY ACID ESTERS OF SUGARS
3639210 - FERMENTATION PROCESSES UTILIZING GASEOUS HYDROCARBONS
3642575 - PROCESS FOR PRODUCING SUGARS BY FERMENTATION

LAEVOSAN-GESELLSCHAFT CHEM. PHARM. INDUSTRIE FRANK +
3812010 - METHOD OF PRODUCING FRUCTOSE AND GLUCOSE FROM SUCROSE

LIFELINE PRODUCTS, INC.
4234686 - STARCH-DEGRADING ENZYMES DERIVED FROM +I CLADOSPORIUM RESINAE

LYCKEBY STARKELSEFORADLING AB
3651221 - SUGAR SUBSTITUTE ADDITIVE PREPARATIONS OF SORBITOL AND GLUCONIC ACID

ORGANIZATIONAL PATENTING (1/69-12/81) - - ALPHA LISTING

MEIJI SEIKA KAISHA LTD.
3868464 - PRODUCTION OF MALTOSE WITH AMYLASES PRODUCED BY STREPTOMYCES
3998696 - METHOD FOR PRODUCING MALTOSE
4294623 - METHOD OF PRODUCING HIGH PURITY MALTOSE

MERCK + CO., INC.
4175007 - PROCESS FOR PRODUCING ANTIBIOTIC A21A

MERCK E., A.G.
3591457 - ENZYMATIC DECOMPOSITION OF GLUCANS

MERCK PATENT GESELLSCHAFT MIT BESCHRANKTER HAFTUNG
3713980 - PROCESS FOR THE PREPARATION OF PERUVOSIDE

MIEJR SEIKA KAISHA, LTD.
3804717 - PRODUCTION OF NEW AMYLASES BY CULTIVATION OF STREPTOMYCES AND USES OF THESE NEW AMYLASES

MILES LABORATORIES INC.
3654081 - STARCH LIQUEFACTION PROCESS
3974036 - PROCESS FOR CONDITIONING BACTERIAL CELLS CONTAINING GLUCOSE ISOMERASE ACTIVITY
4061541 - PREPARATION OF ALKALINE ALPHA-AMYLASE
4212943 - PRODUCTION OF BACTERIAL CELL AGGREGATE
4251632 - PREPARATION OF A BACTERIAL CELL AGGREGATE

MITSUBISHI CHEMICAL INDUSTRIES LTD.
4008124 - PROCESS FOR THE ISOMERIZATION OF GLUCOSE INTO FRUCTOSE
4113568 - PROCESS FOR THE RENEWAL OF AN INSOLUBILIZED GLUCOSE ISOMERASE

MONSANTO COMPANY
3436309 - MODIFYING STARCHES
3622454 - PROCESS FOR THE PREPARATION OF DEXTROSE USING ALPHA
3649457 - ENZYMATIC PROCESSING WITH POLYMER-ENZYME PRODUCT
4013514 - PREPARING A REACTOR CONTAINING ENZYMES ATTACHED TO DIALDEHYDE CELLULOSE

NALCO CHEMICAL COMPANY
3591455 - CONTINUOUS MICROBIAL PROCESS

NATIONAL DISTILLERS AND CHEMICAL CORPORATION
4247638 - RECOVERY OF STARCH FROM AMYLACEOUS ROOTS AS AN AQUEOUS SLURRY
4266027 - PROCESS FOR THE HYDROLYSIS OF STARCH AND FERMENTABLE HYDROLYSATES OBTAINED THEREFROM
4287304 - FERMENTABLE SUGAR FROM THE HYDROLYSIS OF STARCH DERIVED FROM DRY MILLED CORN

NATIONAL STARCH AND CHEMICAL CORPORATION
3525672 - LOW TEMPERATURE STABLE STARCH PRODUCTS

NIHON RIKA SEISHI KABUSHIKI KAISHA
3770672 - PASTE FOR GUMMED TAPE AND PROCESS FOR PRODUCING THE SAME FROM HYDROLYZED STARCH

NOVO INDUSTRI A/S
3912590 - PROCEDURE FOR LIQUEFYING STARCH
4017363 - PRODUCTION OF HIGH PURITY GLUCOSE SYRUPS
4025389 - PROCESS AND ISOMERIZING GLUCOSE
4206284 - SACCHARIFICATION OF GLUCOSE RAFFINATE OR MOTHER LIQUORS
4206285 - SACCHARIFICATION OF ENRICHED FRUCTOSE CONTENT SYRUPS

ORGANIZATIONAL PATENTING (1/69-12/81) - - ALPHA LISTING

NOVO LABORATORIES, INCORPORATED
4138290 - GLUCOSE ISOMERIZATION UNDER EXPANDED BED CONDITIONS

OXFORD PAPER COMPANY
3513072 - INACTIVATION OF ALPHA AMYLASE ENZYMES BY FLUOROSILICATE COMPOUNDS

PENICK + FORD LIMITED
4014743 - METHOD FOR CONTINUOUS PREPARATION OF COOKED THINNED STARCH PASTES
4029546 - COLUMN APPARATUS AND PROCESS FOR IMMOBILIZED ENZYME REACTIONS
4033820 - STARCH SPONGE COLUMN APPARATUS AND PROCESS FOR IMMOBILIZED ENZYME REACTIONS
4304857 - WHOLE CELL ENZYME COMPOSITION CONTAINING FUMED SILICA

PFEIFER + LANGEN
3939281 - EXTRACTION OF FAT FROM STARCH-CONTAINING VEGETABLE MATTER

PHILLIPS PETROLEUM COMPANY
4302542 - FERMENTATION WITH THERMOPHILIC MIXED CULTURES

PILLSBURY COMPANY
3423288 - PROCESS FOR PREPARING GENTIOBIOSE

PROJEKTIERUNG CHEMISCHE VERFAHRENSTECHNIK GMBH
4200692 - PROCESS FOR THE PRODUCTION OF XYLOSE BY ENZYMATIC HYDROLYSIS OF XYLAN

PURDUE RESEARCH CORPORATION
4266981 - PROCESS FOR RECOVERING AND UTILIZING CELLULOSE USING SULFURIC ACID

PURDUE RESEARCH FOUNDATION
4265675 - NONTOXIC CELLULOSE SOLVENT AND PROCESS FOR FORMING AND UTILIZING THE SAME
4281063 - PROCESS FOR TREATING CELLULOSIC MATERIALS AND OBTAINING GLUCOSE THEREFROM

REDPATH SUGARS LIMITED
4176006 - ENZYME IMMOBILIZATION WITH A DISULPHIDE BRIDGE

RESEARCH CORPORATION
3790446 - CYTOPHAGA ISOAMYLASE
4116770 - WAXY BARLEY STARCH WITH UNIQUE SELF-LIQUEFYING PROPERTIES

RESEARCH PRODUCTS REHOVOT LTD.
4251631 - CROSS-LINKED ENZYME MEMBRANE

RHONE POULENC INDUSTRIES
4264732 - ENZYMATIC COMPOSITIONS FOR ISOMERIZING GLUCOSE INTO LEVULOSE

RHONE-POULENC S.A.
3990943 - PROCESS FOR THE ENZYMATIC ISOMERIZATION OF GLUCOSE TO LEVULOSE

RIKAGAKU, KENKYUSHO
3923598 - PROCESS FOR PRODUCING CYCLODEXTRINS
4135977 - PROCESS FOR PRODUCTION OF CYCLODEXTRIN

R. J. REYNOLDS TOBACCO COMPANY
3645848 - PROCESS OF PREPARING GLUCOSE ISOMERASE
3821086 - ENZYMATIC PROCESS USING IMMOBILIZED MICROBIAL CELLS
3935068 - CONTINUOUS ISOMERIZATION PROCESS UTILIZING IMMOBILIZED FLOCCULATE ENZYME
3935069 - ENZYMATIC PROCESS USING IMMOBILIZED MICROBIAL CELLS

ORGANIZATIONAL PATENTING (1/69-12/81) - - ALPHA LISTING

R. J. REYNOLDS TOBACCO COMPANY (CONTINUED)
4060456 - GLUCOSE ISOMERIZATION PROCESS
4061539 - PREPARATION AND USE OF GLUCOSE ISOMERASE
4179335 - THERMOSTABLE LACTASE DERIVED FROM +I BACILLUS COAGULANS
4283496 - PREPARATION AND USE OF GLUCOSE ISOMERASE

ROHM AND HAAS COMPANY
3632346 - PROCESS FOR RENDERING INNOCUOUS FLATULENCE PRODUCING SACCHARIDES
4266026 - CATALYTIC PROCESS UTILIZING HOLLOW FIBER MEMBRANES

ROQUETTE FRERES
3890300 - STARCH HYDROLYSATE METHODS FOR ITS PREPARATION AND PRODUCTS BASED THEREON
4279931 - NON-CARIOGENIC HYDROGENATED STARCH HYDROLYSATE FOR CONFECTIONERY AND PROCESS FOR PREPARING THIS HYDROLYSATE

SHOWA SANGYO KABUSHIKI KAISHA
4106987 - METHOD OF ISOMERIZING GLUCOSE TO FRUCTOSE

SNAM PROGETTI S.P.A.
4291123 - PRODUCTION OF FRUCTOSE AND FRUCTOSE-BASE SYRUPS AND MEANS FOR CARRYING OUT SUCH PRODUCTION

SNOW BRAND MILK PRODUCTS, CO., LTD.
4242450 - METHOD OF HYDROLYZING SUGAR, PROTEIN OR THE LIKE AND APPARATUS THEREFOR

STAMICARBON B.V.
4277563 - PREPARATION OF FRUCTOSE

STANDARD BRANDS INCORPORATED
3425909 - METHOD OF CONVERTING STARCH
3544345 - METHOD
3623953 - METHOD FOR ISOMERIZING GLUCOSE SYRUPS
3630845 - PROCESS FOR PREPARING DEXTROSE CONTAINING SYRUPS
3644126 - METHOD OF MAKING A STARCH CONVERSION SYRUP
3654080 - PROCESS FOR ISOMERIZING GLUCOSE TO FRUCTOSE
3660236 - PRODUCTION OF GLUCOAMYLASE
3689361 - CYANOETHYL STARCH
3694314 - PROCESS FOR ISOMERIZING GLUCOSE TO FRUCTOSE
3784409 - PROCESS FOR PURIFYING GLUCOSE SYRUPS CONTAINING FRUCTOSE
3788945 - PROCESS FOR ISOMERIZING GLUCOSE TO FRUCTOSE
3817832 - PROCESS FOR ISOMERIZING GLUCOSE TO FRUCTOSE
3821082 - TREATING CELLS OF MICROORGANISMS CONTAINING INTRACELLULAR GLUCOSE ISOMERASE
3829362 - PROCESS FOR ENZYMATICALLY ISOMERIZING GLUCOSE TO FRUCTOSE
3834940 - METHOD OF REFINING AN ENZYMATICALLY PRODUCED FRUCTOSE-CONTAINING SOLUTION
3909354 - PROCESS FOR ISOMERIZING GLUCOSE TO FRUCTOSE
4011137 - PROCESS FOR PRODUCING DEXTROSE USING MIXED IMMOBILIZED ENZYMES
4089745 - PROCESS FOR ENZYMATICALLY CONVERTING CELLULOSE DERIVED FROM CORN HULLS TO GLUCOSE
4096036 - METHOD FOR THE SEPARATION OF WATER SOLUBLE POLYOLS
4102745 - PROCESS FOR PRODUCING DEXTROSE USING MIXED IMMOBILIZED ENZYMES
4288548 - PROCESS FOR ISOMERIZING GLUCOSE TO FRUCTOSE

TAKEDA CHEMICAL INDUSTRIES LTD.
3607648 - METHOD FOR THE PRODUCTION OF D-RIBOSE
3919046 - METHOD OF PRODUCING D-RIBOSE
3970522 - METHOD FOR THE PRODUCTION OF D-RIBOSE

TANABE SEIYAKU CO. LTD.
3484255 - PREVENTION OF CLOUDING OF SYRUP IN WHICH CANNED ORANGE SEGMENTS ARE PRESERVED

ORGANIZATIONAL PATENTING (1/69-12/81) - - ALPHA LISTING

(CONTINUED)

TANABE SEIYAKU CO. LTD.
4081327 - PREPARATION OF D-FRUCTOSE
4090919 - WATER-INSOLUBLE TANNIN PREPARATION FOR IMMOBILIZATION OF PROTEINS

TECHNICON INSTRUMENTS CORPORATION
4217415 - IMMOBILIZATION OF AN ENZYME SUBSTRATE

TORAY INDUSTRIES INC.
4275156 - GLUCOSE ISOMERASE IMMOBILIZED PRODUCT AND PROCESS FOR PREPARING SAME

TOWA KASEI KOGYO CO., LTD.
4083881 - PROCESS FOR PREPARING D-MANNITOL

TOYO HAKKA KOGYO KABUSHIKI KAISHA
3988482 - MENTHOL GLYCOSIDE, PROCESS FOR PREPARING THE SAME AND METHOD FOR RELEASING MENTHOL THEREFROM

TRUSTEES OF DARTMOUTH COLLEGE
4237226 - PROCESS FOR PRETREATING CELLULOSIC SUBSTRATES AND FOR PRODUCING SUGAR THEREFROM

UNITED STATES OF AMERICA, AGRICULTURE
3583894 - ENZYME PREPARATION OF HESPERETIN DIHYDROCHALCONE GLUCOSIDE

UNITED STATES OF AMERICA, ARMY
3642580 - ENZYMATIC SACCHARIFICATION OF CELLULOSE
3764475 - ENZYMATIC HYDROLYSIS OF CELLULOSE TO SOLUBLE SUGARS

UNITED STATES OF AMERICA, DEPARTMENT OF ENERGY
3972775 - CONVERSION OF CELLULOSIC MATERIALS TO SUGAR
4032407 - TAPERED BED BIOREACTOR

UNITED STATES OF AMERICA, NAVY
4089746 - METHOD FOR INSOLUBILIZING ENZYMES ON CHITOSAN

UNIVERSITY OF ARKANSAS FOUNDATION
4220721 - METHOD FOR ENZYME REUTILIZATION

WENGER MANUFACTURING
4286058 - ENZYMATIC CONVERSION OF HIGH MOISTURE SHEAR EXTRUDED AND GELATINIZED GRAIN MATERIAL

WORTHINGTON BIOCHEMICAL CORPORATION
4304854 - ALPHA-AMYLASE ASSAY AND SUBSTRATES FOR USE THEREIN

W. R. GRACE + CO.
3929574 - USE OF ENZYMES BOUND TO POLYURETHANE

INVENTORS OF INDIVIDUALLY OWNED PATENTS (1/75-12/81) (ALPHA LISTING)

INVENTOR NAME			STREET	CITY	ST	ZIP/CNTRY
CANTRELL	PETER	MORRIS	722 ANZAC PARADE	KENSINGTON, NEW SOUT		AU
4091116 - ADJUSTING THE PROPORTION OF A SUBSTANCE BY ENZYME TREATMENT						
CHARLES	MARVIN		622 N. 29 ST.	ALLENTOWN	PA	18104
4016293 - METHOD OF CARRYING OUT ENZYME CATALYZED REACTIONS						
4048018 - METHOD OF CARRYING OUT ENZYME CATALYZED REACTIONS						
COUGHLIN	ROBERT	W.	902 SEVENTH AVE.	BETHLEHEM	PA	18018
3928143 - METHOD OF CARRYING OUT ENZYME-CATALYZED REACTIONS						
4016293 - METHOD OF CARRYING OUT ENZYME CATALYZED REACTIONS						
4048018 - METHOD OF CARRYING OUT ENZYME CATALYZED REACTIONS						
EDWARDS	RONALD	ALEXANDER	56 SAUNDERS BAY ROAD	CARINGBAH, NEW SOUTH		AU
4091116 - ADJUSTING THE PROPORTION OF A SUBSTANCE BY ENZYME TREATMENT						
GIACIN	JACK	R.	2 STANWORTH LA.	ALLENTOWN	NJ	08501
4092219 - PREPARATION OF ENZYME-MEMBRANE COMPLEXES						
GILBERT	SEYMOUR	G.	74 N. ROSS HALL BLVD.	PISCATAWAY	NJ	08854
4092219 - PREPARATION OF ENZYME-MEMBRANE COMPLEXES						
GREGOR	HARRY	P.	150 LAKEVIEW AVE.	LEONIA	NJ	07605
4033817 - PRESSURE-DRIVEN ENZYME-COUPLED MEMBRANES						
LEEDER	JOSEPH	G.	379 HUFF RD.	NORTH BRUNSWICK	NJ	08902
4092219 - PREPARATION OF ENZYME-MEMBRANE COMPLEXES						
LIN	PO-MIN		714 BEVIER RD.	PISCATAWAY	NJ	08854
4092219 - PREPARATION OF ENZYME-MEMBRANE COMPLEXES						
MILLER	JOHN	JAMES	2 PARADISE AVENUE	ROSEVILLE, NEW SOUTH		AU
4091116 - ADJUSTING THE PROPORTION OF A SUBSTANCE BY ENZYME TREATMENT						
MILNER	JEREMIAH		41, N. JOHN ST.	LIVERPOOL, L2 6SE		EN
3928135 - PROCESS FOR THE PRODUCTION OF GLUCOSE POLYMERS						
MULLER	HANS		IM ALLMENDLI	8703 ERLENBACH		CH
4069103 - PROCESS FOR RECOVERING DEXTROSE AND DEXTRINS FROM PROTEIN-CONTAINING STARCH PRODUCTS						

PATENTS (1/63-12/81) WITH NEITHER ASSIGNMENT NOR INVENTOR INFORMATION IN THE DATA BASE

3533940 - METHOD FOR TREATING AN AQUEOUS MEDIUM WITH CHITOSAN AND DERIVATIVES OF CHITIN TO REMOVE AN IMPURITY
3592734 - PROCESS FOR CONVERTING STARCH AND OTHER POLYSACCHARIDES INTO DEXTROSE AND MALTOSE CONTAINING PRODUCTS
3655512 - PROCESS FOR PRODUCING SACCHARIDES BY FERMENTATION
3753725 - METHOD FOR ENZYMATIC CONVERSION OF LACTOSE TO GLUCOSE AND GALACTOSE IN LACTOSE CONTAINING FLUIDS
3804716 - STARCH CONVERSION PRODUCTS AND PROCESSES FOR PREPARING SAME

3228840	3249504	3275528	3335081	3377989	3385757	3407120	3418210	3419473	3100740	3101302	3108928
3137639	3149049	3150983	3150993	3171792	3185633	3197338	3200110	3206375	3249512	3249514	3251748
3264193	3265586	3268417	3280006	3285776	3291702	3296092	3298926	3301848	3303101	3303102	3305395
3306752	3308037	3311542	3329578	3332851	3335066	3337414	3345268	3371018	3378462	3380891	3380892

STARCH HYDROLYSATES

FRONT PAGES OF SELECTED PATENTS

Jan-Apr 1982 U.S. Patents (7)	Selected U.S. Patents (36)	
4,317,881	4,242,451	4,217,414
4,321,323	4,230,802	4,226,937
4,317,880	4,208,482	4,219,571
4,310,628	4,206,285	4,132,595
4,316,956	4,282,319	4,199,372
4,314,854	4,252,899	4,135,977
4,321,324	4,264,732	4,277,563
	4,247,636	4,266,027
	4,113,565	4,251,630
	4,088,538	4,266,981
	4,106,987	4,242,450
	4,081,327	4,246,347
	4,279,931	4,089,745
	4,138,290	4,097,333
	3,996,107	4,237,226
	4,113,509	4,220,721
	4,254,150	4,235,965
	4,202,939	4,241,185

PATENTS ARE LISTED IN ORDER OF APPEARANCE

United States Patent [19]
Yagi et al.
[11] **4,317,881**
[45] **Mar. 2, 1982**

[54] **PROCESS FOR PRODUCING CYCLODEXTRINS**

[75] Inventors: **Yoshiaki Yagi**, Fujisawa; **Kageaki Kouno**, Tokyo; **Taiji Inui**, Chigasaki, all of Japan

[73] Assignee: **Sanraku-Ocean Co., Ltd.**, Tokyo, Japan

[21] Appl. No.: **134,255**

[22] Filed: **Mar. 26, 1980**

[30] **Foreign Application Priority Data**

Apr. 7, 1979 [JP] Japan 54/42290

[51] **Int. Cl.**[3] **C12N 9/10**; C12P 19/18
[52] **U.S. Cl.** **435/97**; 435/193; 435/859
[58] **Field of Search** 435/97, 859, 193

[56] **References Cited**

U.S. PATENT DOCUMENTS

3,652,398	3/1972	Armbruster et al.	435/97
3,812,011	5/1974	Okada et al.	435/97
3,923,598	12/1975	Horikoshi	435/97
3,988,206	10/1976	Shiosaka	435/97 X
4,135,977	1/1979	Horikoshi et al.	435/97

Primary Examiner—Esther M. Kepplinger
Attorney, Agent, or Firm—Jordan and Hamburg

[57] **ABSTRACT**

A process for producing cyclodextrins which comprises using cultured medium of the strains belonging to genus Micrococcus, filtrate thereof or enzyme preparation obtained therefrom, especially, the process in which the ratio of α-cyclodextrin to β-cyclodextrin can be desirably varied by regulating the condition of the reaction mixture, is disclosed.

8 Claims, 6 Drawing Figures

United States Patent [19]
Heady
[11] **4,317,880**
[45] **Mar. 2, 1982**

[54] **PROCESS FOR THE PRODUCTION OF FRUCTOSE POLYMERS AND HIGH FRUCTOSE SYRUPS**

[75] Inventor: **Robert E. Heady**, Park Forest, Ill.

[73] Assignee: **CPC International Inc.**, Englewood Cliffs, N.J.

[21] Appl. No.: **156,154**

[22] Filed: **Jun. 3, 1980**

[51] **Int. Cl.**[3] **C12P 19/02**; C12P 19/18; C12P 19/24
[52] **U.S. Cl.** **435/94**; 435/97; 435/105; 435/813; 435/911
[58] **Field of Search** 435/94, 97, 101, 105, 435/813, 911

[56] **References Cited**

U.S. PATENT DOCUMENTS

4,077,842	3/1978	Cory	435/188

FOREIGN PATENT DOCUMENTS

2000144	1/1979	United Kingdom

Primary Examiner—Esther M. Kepplinger
Attorney, Agent, or Firm—Stanley M. Parmerter

[57] **ABSTRACT**

This invention relates to a process especially useful for the preparation of novel fructose polymers and high fructose syrups from sucrose.

12 Claims, No Drawings

United States Patent [19]
Maselli et al.
[11] **4,321,323**
[45] **Mar. 23, 1982**

[54] **CARBOHYDRATE PROCESS**

[75] Inventors: **John A. Maselli**, Wilton; **Robert O. Horwath**, Westport, both of Conn.

[73] Assignee: **Standard Brands Incorporated**, New York, N.Y.

[21] Appl. No.: **160,758**

[22] Filed: **Jun. 18, 1980**

[51] **Int. Cl.**[3] **C12P 7/26**; C12P 19/02
[52] **U.S. Cl.** **435/105**; 435/148; 435/182; 435/190; 435/813; 435/819
[58] **Field of Search** 435/105, 72, 148, 190, 435/147, 813, 819, 182

[56] References Cited

U.S. PATENT DOCUMENTS

3,911,140	10/1975	Osborne et al.	435/813 X
4,102,742	7/1978	Klose et al.	435/813 X
4,246,347	1/1981	Neidleman et al.	435/105
4,247,641	1/1981	Neidleman et al.	435/157

OTHER PUBLICATIONS

Skoog et al., *Analytical Chemistry*, Holt, Rinehart and Winston, New York, 319, 507-509 (1965).
Sienko et al., *Chemistry: Principles and Properties*, McGraw-Hill Book Co., New York, 249-254 (1966).
Hackh's Chemical Dictionary, McGraw-Hill Book Co., New York, 571 (1969).

Primary Examiner—Esther M. Kepplinger
Attorney, Agent, or Firm—Richard Kornutik

[57] **ABSTRACT**

Disclosed are methods of producing glucosone which comprises enzymatically oxidizing glucose with glucose-2-oxidase in a first zone and separating the concomitantly produced hydrogen peroxide from said first zone through a semi-permeable membrane into a second zone, said membrane being permeable only to compounds of a molecular weight of less than about 100.

11 Claims, No Drawings

United States Patent [19]
Leiser
[11] **4,310,628**
[45] **Jan. 12, 1982**

[54] **FRUCTOSE PRODUCTION**

[75] Inventor: **Roger S. Leiser**, Decatur, Ill.
[73] Assignee: **A. E. Staley Manufacturing Company**, Decatur, Ill.

[21] Appl. No.: **130,276**
[22] Filed: **Mar. 14, 1980**

Related U.S. Application Data

[63] Continuation of Ser. No. 662,199, Feb. 26, 1976, abandoned.

[51] **Int. Cl.**[3] **C12P 19/24**; C12N 9/92
[52] **U.S. Cl.** **435/94**; 435/234; 435/813
[58] **Field of Search** 435/94, 188, 234, 813, 435/174, 177, 179, 180, 181

[56] **References Cited**

U.S. PATENT DOCUMENTS

3,847,741 11/1974 Heady et al. 435/94
3,979,261 9/1976 Outtrup 435/94
4,025,389 5/1977 Poulsen et al. 435/94

OTHER PUBLICATIONS

Yoshimura et al., "Studies on D-Glucose Isomerizing Activity of D-Xylose Grown Cells from *Bacillus coagulans*, Strain HN-68" *Agr. Biol. Chem.*, vol. 30, No. 10, (1966), pp. 1015-1023.
Danno, "Studies on D-Glucose-Isomerizing Enzyme from *Bacillus Coagulans*, Strain HN-68", *Agr. Biol. Chem.*, vol. 34, No. 12 (1970), pp. 1805-1814.
Dixon et al., *Enzymes*, Academic Press Inc., New York, (1964), pp. 116-119 and 144-151.
Zittan et al., "Sweetzyme—A New Immobilized Glucose Isomerase", *Die Starke*, vol. 27, No. 7, (1975), pp. 236-241.

Primary Examiner—Thomas Wiseman
Attorney, Agent, or Firm—M. Paul Hendrickson; Charles J. Meyerson

[57] **ABSTRACT**

Fructose productivity and isomerase activity in immobilized beds or column operations employing isomerases obtained from Bacillus organisms are significantly improved by isomerizing a high solids feed syrup at pH 7.0-7.5 and 55° C. to 60° C. Without adding cobalt to the feed streams, continuous column operation in excess of 4,000 hours and yielding greater than 3,500 pounds of a 42% fructose syrup for each pound of isomerase can be achieved.

11 Claims, No Drawings

United States Patent [19]
Takagi
[11] **4,314,854**
[45] **Feb. 9, 1982**

[54] **METHOD FOR THE TREATMENT OF CELLULOSIC SUBSTANCES WITH HYDROGEN PEROXIDE**

[75] Inventor: Motoyoshi Takagi, Toda, Japan
[73] Assignee: Bio Research Center Company Ltd., Saitama, Japan

[21] Appl. No.: **240,713**
[22] Filed: **Mar. 5, 1981**
[30] **Foreign Application Priority Data**
Oct. 3, 1980 [JP] Japan 55-30109
[51] **Int. Cl.**[3] **C13K 1/02**
[52] **U.S. Cl.** **127/37**; 162/78; 435/99
[58] **Field of Search** 127/37; 162/78; 435/99

[56] **References Cited**

U.S. PATENT DOCUMENTS

2,284,500 5/1942 Warth 127/37
2,368,527 1/1945 Edelstein ..... 162/78 X
2,777,749 1/1957 Young ..... 162/78 X
3,156,654 11/1964 Konecny ..... 162/78 X
3,972,775 8/1976 Wilke 435/99
3,990,945 11/1976 Huff 435/99
4,029,543 6/1977 Lindahl ..... 162/78 X
4,089,745 5/1978 Antrim 435/99
4,105,467 8/1978 Buckl 127/37
4,160,693 7/1979 Lindahl ..... 162/78 X
4,222,819 9/1980 Fossum ..... 162/78 X
4,237,226 12/1980 Grethlein 435/99
4,265,675 5/1981 Tsao 127/37
4,281,063 7/1981 Tsao 435/99

OTHER PUBLICATIONS

D. Lachenal et al., Tappi, 63 (11), pp. 59-62 (1980).
Chemical Abstracts, 71:82463f (1969).

Primary Examiner—Sidney Marantz
Attorney, Agent, or Firm—D. R. Cassady

[57] **ABSTRACT**

A method to enhance the reactivity of cellulose-containing materials to cellulase enzymes by treating an aqueous suspension of the material with hydrogen peroxide in the presence of a Mn^{+2} ion forming manganese compound.

4 Claims, No Drawings

United States Patent [19]
Lützen
[11] **4,316,956**
[45] **Feb. 23, 1982**

[54] **FERMENTATION PROCESS**

[75] Inventor: **Niels W. Lützen**, Ballerup, Denmark
[73] Assignee: **Novo Industri A/S**, Denmark

[21] Appl. No.: **119,034**
[22] Filed: **Feb. 6, 1980**
[51] **Int. Cl.**[3] **C12P 19/20**
[52] **U.S. Cl.** **435/96**; 435/99; 435/161
[58] **Field of Search** 435/96, 42, 99, 161, 435/162, 813; 426/11, 13, 14, 29, 494

[56] **References Cited**

U.S. PATENT DOCUMENTS

2,342,330 2/1944 Christensen 435/161
3,922,197 11/1975 Leach et al. 435/96
4,009,074 2/1977 Walon 435/94
4,009,075 2/1977 Hoge 435/162
4,092,434 5/1978 Yoshizumi ..... 426/14 X
4,235,965 11/1980 Walon 435/99

Primary Examiner—R. B. Penland
Attorney, Agent, or Firm—Fidelman, Wolffe & Waldron

[57] **ABSTRACT**

This invention relates to a novel fermentation process and in particular, to fermentative production of ethanol producing in the presence of non-gelled, or granular, starch particles, alpha-amylase and a glucoamylase; characteristic of the present process is recycle of enzymes for renewed use in fermentation, usually through termination of the fermentation prior to complete disappearance of the granular starch particles, and recovery for use anew of the unconsumed starch, along with enzymes thereon. Fermentation according to practice of this invention proceeds at a near to linear rate in the main.

8 Claims, 9 Drawing Figures

United States Patent [19]
Maselli et al.
[11] **4,321,324**
[45] **Mar. 23, 1982**

[54] **PROCESS FOR MAKING GLUCOSONE**

[75] Inventors: **John A. Maselli**, Wilton; **Robert O. Horwath**, Westport, both of Conn.
[73] Assignee: **Standard Brands Incorporated**, New York, N.Y.

[21] Appl. No.: **160,763**
[22] Filed: **Jun. 18, 1980**
[51] **Int. Cl.**[3] **C12P 7/26**; C12P 17/02; C12P 19/02
[52] **U.S. Cl.** **435/105**; 435/123; 435/148; 435/182; 435/190; 435/813; 435/819
[58] **Field of Search** 435/105, 148, 123, 190, 435/147, 813, 819, 182, 155, 157, 158

[56] **References Cited**

U.S. PATENT DOCUMENTS

3,911,140 10/1975 Osborne et al. ..... 435/813 X
4,102,742 7/1978 Klose et al. ..... 435/813 X
4,246,347 1/1981 Neidleman et al. 435/105
4,247,641 1/1981 Neidleman et al. ..... 435/157 X

FOREIGN PATENT DOCUMENTS

7176 1/1980 European Pat. Off. .

OTHER PUBLICATIONS

Milas et al., *JACS*, 58, 1302-1304, (1936).
Milas et al., *JACS*, 59, 2345-2347, (1937).
Milas et al., *JACS*, 59, 543-544, (1937).
Milas, *JACS*, 59, 2342-2344, (1937).

Primary Examiner—Esther M. Kepplinger
Attorney, Agent, or Firm—Richard Kornutik

[57] **ABSTRACT**

Disclosed are methods of producing glucosone which comprises enzymatically oxidizing glucose with glucose-2-oxidase in a first zone and separating the concomitantly produced hydrogen peroxide from said first zone through a semi-permeable membrane into a second zone wherein an alkene is reacted with said hydrogen peroxide to form oxygenated products of said alkene, said membrane being permeable only to compounds of a molecular weight of less than about 100.

8 Claims, No Drawings

United States Patent [19]
Ehrenthal Irving et al.
[11] **4,242,451**
[45] **Dec. 30, 1980**

[54] **METHOD OF TREATMENT OF FLOCCULATED HOMOGENATE OF MICROBIAL CELLS CONTAINING GLUCOSE ISOMERASE**

[75] Inventor: **Irving Ehrenthal**, University City; **Kenneth K. Shieh**, St. Louis County; **Barrett L. Scallet**, Clayton; **Jagdish Rajpara**, St. Louis, all of Mo.

[73] Assignee: **Anheuser-Busch, Incorporated**, St. Louis, Mo.

[21] Appl. No.: **88,013**

[22] Filed: **Oct. 25, 1979**

Related U.S. Application Data

[63] Continuation-in-part of Ser. No. 859,294, Dec. 12, 1977, abandoned.

[51] **Int. Cl.**[3] **C12P 19/24**; C12N 11/14
[52] **U.S. Cl.** **435/94**; 435/176; 435/827
[58] **Field of Search** 435/94, 176

[56] **References Cited**

U.S. PATENT DOCUMENTS

3,838,007	9/1974	Van Velzen	195/68
3,935,069	1/1976	Long	195/31 F
3,980,521	9/1976	Amotz et al.	195/68
3,989,597	11/1976	Lee et al.	195/56
4,001,082	1/1977	Tsumura et al.	195/31 F
4,060,456	11/1977	Long	195/31 F
4,138,290	2/1979	McMullen	435/94
4,144,127	3/1979	Enokizono et al.	435/176

Primary Examiner—Lionel M. Shapiro
Attorney, Agent, or Firm—Gravely, Lieder & Woodruff

[57] **ABSTRACT**

This application concerns a method for treating a flocculated homogenate of whole cell glucose isomerase derived from the microorganism Actinoplanes so that the preparation can be dried, preferably after being extruded into cylindrically-shaped particles. The critical step in this method is the addition of a water absorbing smectite filler to the flocculated homogenate prior to drying. The floc also may be frozen and thawed prior to addition of the filler.

21 Claims, No Drawings

United States Patent [19]
Ehrenthal et al.
[11] **4,208,482**
[45] **Jun. 17, 1980**

[54] **IMMOBILIZATION OF GLUCOSE ISOMERASE**

[75] Inventors: **Irving Ehrenthal**, University City; **Keith E. Miner**, Mehlville, both of Mo.

[73] Assignee: **Anheuser-Busch, Incorporated**, St. Louis, Mo.

[21] Appl. No.: **679,769**

[22] Filed: **Apr. 23, 1976**

[51] **Int. Cl.**[2] **C07G 7/02**; C12D 13/04
[52] **U.S. Cl.** **435/178**; 435/94
[58] **Field of Search** ..... 195/31, 31 F, 63, 68, 195/DIG. 11, 66 R

[56] **References Cited**

U.S. PATENT DOCUMENTS

3,779,869	12/1973	Zienty	195/68
3,834,988	9/1974	Shieh et al.	195/66 R
3,843,442	10/1974	Moskowitz	195/68 X
3,956,065	5/1976	Idaszak et al.	195/31 F

OTHER PUBLICATIONS

Toda et al., Sucrose Inversion by Immobilized Yeast Cells in a Complete Mixing Reactor Biotechnology and Bioengineering, vol. XVII 1975, (pp. 481-497).

Strandberg et al., Free and Immobilized Glucose Isomerase from *Streptomyces phaeochromogenes*, Applied Microbiology, vol. 21, No. 4, 1971 (pp. 588-593).

Nilsson et al., The Use of Bead Polymerization of Acrylic Monomers for Immobilization of Enzymes Biochimica et. Biophysics Actz, vol. 268, 1972 (pp. 253-256).

Primary Examiner—David M. Naff
Attorney, Agent, or Firm—Gravely, Lieder & Woodruff

[57] **ABSTRACT**

Immobilized glucose isomerase is prepared by mixing 0.5 to 1.5 parts by weight whole microbial cells containing glucose isomerase with one part by weight agar, combining the resultant mixture with an organic solvent, recovering discrete particles of agar gel with the whole microbial cells entrapped therein and drying the agar gel particles. The immobilized glucose isomerase has long half life stability when used in a column in a continuous process to convert glucose to fructose.

8 Claims, No Drawings

United States Patent [19]
Ehrenthal et al.
[11] **4,230,802**
[45] **Oct. 28, 1980**

[54] **UNREFINED GLUCOSE SYRUP AS SUBSTRATE BY GLUCOSE ISOMERIZING ENZYME IN PRODUCING FRUCTOSE FROM GLUCOSE**

[75] Inventors: **Irving Ehrenthal**, University City, Mo.; **Louis F. Slapshak**, Belleville, Ill.; **Jagdish Rajpara**, St. Louis County, Mo.

[73] Assignee: **Anheuser-Busch, Incorporated**, St. Louis, Mo.

[21] Appl. No.: **646,629**

[22] Filed: **Jan. 5, 1976**

[51] **Int. Cl.**[3] **C12P 19/24**
[52] **U.S. Cl.** **435/94**; 435/99
[58] **Field of Search** ..... 195/31 F, 114, 66 R, 195/65, 31 R; 435/94, 99

[56] **References Cited**

U.S. PATENT DOCUMENTS

3,795,585	3/1974	Suzuki et al.	195/114 X
3,813,318	5/1974	Armbruster et al.	195/31 F
3,834,988	9/1974	Shieh et al.	195/31 F
3,910,820	10/1975	Holt et al.	195/31 R

FOREIGN PATENT DOCUMENTS

1295407	11/1972	United Kingdom	195/31 F

OTHER PUBLICATIONS

Chemical Abstracts, 81:36632u.

Primary Examiner—Thomas G. Wiseman
Attorney, Agent, or Firm—Gravely, Lieder & Woodruff

[57] **ABSTRACT**

This application concerns a method of preparing high fructose syrups from unrefined high glucose syrups (produced by an acid-enzyme or enzyme-enzyme conversion) by treating the substrate with glucose isomerizing enzyme without the addition of cobalt and/or magnesium salts.

7 Claims, No Drawings

United States Patent [19]
Poulsen et al.
[11] **4,206,285**
[45] **Jun. 3, 1980**

[54] **SACCHARIFICATION OF ENRICHED FRUCTOSE CONTENT SYRUPS**

[75] Inventors: **Poul Børge R. Poulsen; Susanne Rugh**, both of Vaerlose; **Barrie E. Norman**, Farum, all of Denmark

[73] Assignee: **Novo Industri A/S**, Denmark

[21] Appl. No.: **865,077**

[22] Filed: **Dec. 27, 1977**

[51] **Int. Cl.**[2] **C12P 19/24**
[52] **U.S. Cl.** **435/96**; 435/94; 435/803; 435/813
[58] **Field of Search** ..... 195/31 R, 31 F, 115; 536/1; 127/46; 435/94, 96, 99, 803, 813

[56] **References Cited**

U.S. PATENT DOCUMENTS

3,305,395	2/1967	Scallet et al.	195/31 F X
3,935,070	1/1976	Suekane et al.	195/31 F
4,011,137	3/1977	Thompson et al.	195/31 R
4,096,036	6/1978	Liu et al.	195/31 F

FOREIGN PATENT DOCUMENTS

48-22643	3/1973	Japan	195/31 F

OTHER PUBLICATIONS

Nakamura, et al., "Back Polymerization by Saccharifying Amylase", *International Chem. Eng.*, vol. 4, No. 3, pp. 530-534.

Primary Examiner—Thomas G. Wiseman
Attorney, Agent, or Firm—Fidelman, Wolffe & Waldron

[57] **ABSTRACT**

Saccharification of low DP polysaccharides in syrups of high fructose content and low glucose content by short term contact with amyloglucosidase e.g. in less than 60 minutes, 1-10 AG units/gm of syrup solids, and syrup concentrations of 2-50 w/o solids in a continuous process employing immobilized AMG.

Suitable high fructose content low glucose syrups are products that result from fractionation of isosyrup into enriched 50+% d.s.b. fructose syrups.

2 Claims, 1 Drawing Figure

United States Patent [19]
Conrad
[11] 4,282,319
[45] Aug. 4, 1981

[54] PROCESS FOR THE PREPARATION OF A HYDROLYZED PRODUCT FROM WHOLE GRAIN

[75] Inventor: Ernst Conrad, Lyckeby, Sweden

[73] Assignee: Kockums Construction AB, Hoganas, Sweden

[21] Appl. No.: 951,076

[22] Filed: Oct. 13, 1978

[30] Foreign Application Priority Data

Oct. 18, 1977 [SE] Sweden 7711742
Nov. 1, 1977 [SE] Sweden 7712341
Aug. 22, 1978 [SE] Sweden 7808870

[51] Int. Cl.³ C12P 21/06; A23J 1/12
[52] U.S. Cl. 435/69; 435/94; 435/96; 435/99; 426/18; 426/28; 426/44
[58] Field of Search ..... 426/18, 44, 31, 28; 195/31 R, 29; 435/68, 99, 94, 96

[56] References Cited

U.S. PATENT DOCUMENTS

2,051,017	8/1936	Schwarz et al.	426/44
3,157,513	11/1964	Allen et al.	426/18
3,249,512	5/1966	Bode	426/18
3,912,590	10/1975	Slott et al.	195/31 R
3,958,015	5/1976	Gay	426/44

Primary Examiner—Lionel M. Shapiro
Assistant Examiner—Elizabeth A. Hatcher
Attorney, Agent, or Firm—Brumbaugh, Graves, Donohue & Raymond

[57] ABSTRACT

The present invention relates to a process for the preparation of hydrolyzed products from whole grain, and such derived products. The invention solves the problem of obtaining a protein and sugar containing product able to be filtrated whereby this is achieved by treating whole grain, such as wheat, maize, rye, barley, oat, and rice, with a proteolytic enzyme to transform water insoluble proteins into watersoluble products, and further to treat the starch contents with an amylase free from other carbohydrate hydrolyzing enzymes to form water-soluble starch products, as mono and disaccharides, removing the bran fraction and removing water to obtain a dry, semimoist, or liquid but concentrated derived product. The product is to be added as a sweetening agent in food products as bread, drinks, and cereal products, whereby the bran obtained can be used in bread as fiber additive.

13 Claims, No Drawings

United States Patent [19]
Lartigau et al.
[11] 4,264,732
[45] Apr. 28, 1981

[54] ENZYMATIC COMPOSITIONS FOR ISOMERIZING GLUCOSE INTO LEVULOSE

[75] Inventors: Guy Lartigau; Albert Bouniot; Michel Guerineau, all of Melle, France

[73] Assignee: Rhone-Poulenc Industries, Paris, France

[21] Appl. No.: 926,821

[22] Filed: Jul. 21, 1978

[30] Foreign Application Priority Data

Jul. 27, 1977 [FR] France 77 23846

[51] Int. Cl.³ C12P 19/24; C12N 11/12; C12N 11/04
[52] U.S. Cl. 435/94; 435/179; 435/182; 435/813
[58] Field of Search ..... 195/31 F, 115, 63, 68, 195/DIG. 11, 65, 59; 435/94, 179, 182, 813

[56] References Cited

U.S. PATENT DOCUMENTS

3,733,205	5/1973	Shovers et al.	195/68
3,875,008	4/1975	Yoshino et al.	195/63
3,941,655	3/1976	Heady et al.	195/31 F
3,990,943	11/1976	Bouniot et al.	195/68
4,004,980	1/1977	Emery et al.	195/68

OTHER PUBLICATIONS

Hamilton et al., "Glucose Isomermase: A Case Study of Enzyme-Catalyzed Process Technology" *Immobilized Enzymes in Food 2 Microbial Processes*, Plenum Press, N.Y., Olson et al. ed. (1974) pp. 85-131.
Geyer, "Glucose Isomermase: New Possibilites for the Starch-and Food Industry", *Die Starke* vol. 26, No. 7 (1974) pp. 225-232.
Lehninger, *Biochemistry*, Worth Publishers, Inc., N.Y., (1970) pp. 149, 150.

Primary Examiner—Thomas G. Wiseman
Attorney, Agent, or Firm—Burns, Doane, Swecker & Mathis

[57] ABSTRACT

The invention relates to enzymatic compositions containing intra-cellular glucose-isomerase which is enclosed in structures based on cellulose ester, their preparation and their use for isomerizing glucose into levulose.

In addition to the cellulose ester and micro-organism cells, e.g. Streptomyces phaeochromogenes, these compositions contain a sparingly water-soluble magnesium compound and optionally a sparingly water-soluble cobalt compound.

These compositions make it possible to isomerize glucose into levulose in a continuous process, with the addition of either no, or a small amount of magnesium ions to the glucose syrup to be isomerized and without the addition of cobalt ions.

16 Claims, No Drawings

United States Patent [19]
Enokizono et al.
[11] 4,252,899
[45] * Feb. 24, 1981

[54] PROCESS FOR IMMOBILIZING GLUCOSE ISOMERASE AND A METHOD OF CONTINUOUS ISOMERIZATION OF GLUCOSE

[75] Inventors: Shigehiro Enokizono, Ageo; Soichiro Ushiro, Kokubunji, both of Japan

[73] Assignee: CPC International Inc., Englewood Cliff, N.J.

[*] Notice: The portion of the term of this patent subsequent to Mar. 13, 1996, has been disclaimed.

[21] Appl. No.: 3,162

[22] Filed: Jan. 15, 1979

Related U.S. Application Data

[63] Continuation of Ser. No. 780,374, Mar. 23, 1977, Pat. No. 4,144,127.

[30] Foreign Application Priority Data

Apr. 2, 1976 [JP] Japan 51-36179

[51] Int. Cl.³ C12P 19/24
[52] U.S. Cl. 435/94; 435/176; 435/813
[58] Field of Search 435/94, 176, 813

[56] References Cited

U.S. PATENT DOCUMENTS

3,669,841	6/1972	Miller	435/176
3,796,634	3/1974	Haynes et al.	435/180
3,930,951	1/1976	Messing	435/176
3,933,587	1/1976	Maeda et al.	435/173
3,935,068	1/1976	Nystrom	435/94
3,956,065	5/1976	Idaszak et al.	435/94

Primary Examiner—Thomas G. Wiseman

[57] ABSTRACT

Glucose isomerase is immobilized in an active form by adsorbing the glucose isomerase onto a colloidal silica. The enzyme is contacted with the colloidal silica and the resulting composite solidified by freezing. Optionally, the composite may be gelatinized prior to freezing. The composite is then used for the isomerization of glucose to fructose.

3 Claims, No Drawings

United States Patent [19]
Schoenrock et al.
[11] 4,247,636
[45] Jan. 27, 1981

[54] PROCESS FOR PRODUCING A HIGH FRUCTOSE SWEETENER, HIGH PROTEIN MEAL, AND CEREAL GERM OILS

[75] Inventors: Karlheinz W. R. Schoenrock, Ogden, Utah; Thomas H. Henscheid, Twin Falls, Id.; Hugh G. Rounds, Ogden, Utah

[73] Assignee: The Amalgamated Sugar Company, Ogden, Utah

[21] Appl. No.: 955,092

[22] Filed: Oct. 26, 1978

[51] Int. Cl.³ C12P 19/24
[52] U.S. Cl. 435/94; 435/96; 435/99
[58] Field of Search 435/94, 96, 99

[56] References Cited

U.S. PATENT DOCUMENTS

3,880,742	4/1975	James et al.	435/200
4,025,389	5/1977	Poulsen et al.	435/94
4,059,489	11/1977	Meers	435/94
4,069,103	1/1978	Muller	435/99 X
4,081,327	3/1978	Chibata et al.	435/94
4,110,163	8/1978	Hjortshoj et al.	435/200

Primary Examiner—Lionel M. Shapiro
Attorney, Agent, or Firm—Trask & Britt

[57] ABSTRACT

A process for producing highly concentrated syrups by enzyme treatment of impure starch flour containing beta-glucans. High protein meal and cereal germ oils are recoverable as by-products. The impure starch source is ground into flour and slurried with water. Beta-glucanase enzyme is then added and allowed to react. The reacted slurry is treated with alpha-amylase enzyme and is again allowed to react. The solids and cereal germ oils are separated from the aqueous solution and processed into useful by-products. The aqueous solution is then saccharified into a high dextrose solution by the addition of glucoamylase enzyme. The saccharified mixture is filtered, purified and its pH is adjusted to 8.5 with active MgO before isomerization into a high fructose sweetener by conventional means.

21 Claims, 4 Drawing Figures

United States Patent [19]
Hurst
[11] **4,113,565**
[45] **Sep. 12, 1978**

[54] **GLUCOSE ISOMERIZATION WITH IRON ION-THIOL ACTIVATOR ION-GLUCOSE ISOMERASE SYSTEMS**

[75] Inventor: **Thomas L. Hurst**, Decatur, Ill.

[73] Assignee: **A. E. Staley Manufacturing Company**, Decatur, Ill.

[21] Appl. No.: **750,332**

[22] Filed: **Dec. 13, 1976**

Related U.S. Application Data

[63] Continuation-in-part of Ser. No. 560,658, Mar. 20, 1975, Pat. No. 4,026,764.

[51] **Int. Cl.**[2] **C12D 13/02**
[52] **U.S. Cl.** ..... **195/31 F**; 195/114
[58] **Field of Search** ..... 195/31 F, 62, 66 R, 195/114

[56] **References Cited**

U.S. PATENT DOCUMENTS

3,623,953	11/1971	Cotter et al.	195/31 F
3,956,066	5/1976	Coker et al.	195/31 F
3,974,036	8/1976	Snell	195/65
3,979,261	9/1976	Outtrup	195/31 F
4,008,124	2/1977	Fujita et al.	195/31 F
4,026,764	5/1977	Hurst	195/31 F

OTHER PUBLICATIONS

Tz-Yuan et al., "D-Xylose Isomerase of Streptomyces griseus," Acta Biochimica et Biophysica Sinca", vol. 14, No. 3, pp. 342-350 (1964).
Perry et al., Chemical Engineer's Handbook, 4th ed., McGraw-Hill Book Co., New York, (1963) pp. 23-27.

Primary Examiner—Raymond N. Jones
Assistant Examiner—Thomas G. Wiseman
Attorney, Agent, or Firm—M. Paul Hendrickson; Charles J. Meyerson

[57] **ABSTRACT**

Iron ions may be effectively used as a metal activator or co-metal activator in glucose isomerization when used in conjunction with thiol activators. The thiol activators are characterized as being able to cleave disulfide linkages and include reducing reagents such as water-soluble SO_3^- producing metal salts, ascorbic acid, thiocyanates, thioglycollates, etc. The thiol activator-iron ion activating system is especially effective when used in conjunction with at least one other metal ion activator such as magnesium, manganese or cobalt ions. Effective enzymatic glucose isomerization, without using cobalt ions, is achievable by a magnesium-iron-thiol activator-isomerase system.

16 Claims, No Drawings

United States Patent [19]
Kanno et al.
[11] **4,106,987**
[45] **Aug. 15, 1978**

[54] **METHOD OF ISOMERIZING GLUCOSE TO FRUCTOSE**

[75] Inventors: **Tomoei Kanno**, Okegawa; **Hiroaki Watanabe**, Yokohama; **Shohachiro Sano**, Ageo, all of Japan

[73] Assignee: **Showa Sangyo Co. Ltd.**, Tokyo, Japan

[21] Appl. No.: **757,211**

[22] Filed: **Jan. 6, 1977**

[30] **Foreign Application Priority Data**

Jan. 8, 1976 [JP] Japan 51-1789
Jan. 16, 1976 [JP] Japan 51-4462

[51] **Int. Cl.**[2] **C12D 13/00**
[52] **U.S. Cl.** ..... **195/31 F**; 195/63
[58] **Field of Search** ..... 195/31 F, 63, 68, DIG. 11

[56] **References Cited**

U.S. PATENT DOCUMENTS

3,972,776	8/1976	Vieth et al.	195/65
3,980,521	9/1976	Amotz et al.	195/68
4,001,082	1/1977	Tsumura et al.	195/31 F

OTHER PUBLICATIONS

Toda et al., Biotechnology and Bioengineering, vol. XVII, pp. 481-497, (1975).

Primary Examiner—Lionel M. Shapiro
Attorney, Agent, or Firm—Hans Berman

[57] **ABSTRACT**

An immobilized glucose isomerase is obtained by mixing microbial cells of the microorganism having glucose isomerase activity with an aqueous solution of a natural water insoluble gel-forming substance. Glucose is isomerized to fructose by contacting an aqueous solution of glucose with said immobilized glucose isomerase more favorably than the usual isomerization method.

3 Claims, No Drawings

United States Patent [19]
Schneider
[11] **4,088,538**
[45] **May 9, 1978**

[54] **REVERSIBLY PRECIPITABLE IMMOBILIZED ENZYME COMPLEX AND A METHOD FOR ITS USE**

[75] Inventor: **Michel Schneider**, Grand-Lancy, Switzerland

[73] Assignee: **Battelle Memorial Institute**, Switzerland

[21] Appl. No.: **690,096**

[22] Filed: **May 26, 1976**

[30] **Foreign Application Priority Data**

May 30, 1975 Switzerland 6965/75

[51] **Int. Cl.**[2] **C07G 7/02**; C08F 216/34; C08F 220/06; C12D 13/02
[52] **U.S. Cl.** ..... **195/63**; 195/31 R; 195/31 F; 195/68; 195/116; 195/DIG. 11
[58] **Field of Search** ..... 195/31 R, 31 F, 68, 195/63, 65, 116, 115, DIG. 11

[56] **References Cited**

U.S. PATENT DOCUMENTS

3,576,760	4/1971	Gould et al.	195/68 X
3,625,827	12/1971	Wildi et al.	195/63
3,649,457	3/1972	Westman	195/68
3,654,083	4/1972	Moelker	195/68
3,695,999	10/1972	Fogione et al.	195/63
4,017,364	4/1977	Van Leemputten	195/68

FOREIGN PATENT DOCUMENTS

2,423,059	8/1975	Germany	195/68
1,353,317	5/1974	United Kingdom	195/63

Primary Examiner—Alvin E. Tanenholtz
Assistant Examiner—Thomas G. Wiseman
Attorney, Agent, or Firm—Robert E. Burns; Emmanuel J. Lobato; Bruce L. Adams

[57] **ABSTRACT**

A process for using and preparing a reversibly soluble enzymatically active polymer enzyme product which consists of an enzyme covalently bonded to a water soluble organic polymer selected from polyacrylic acid, dextran, carboxy methyl cellulose, and polyethylene glycol which have carboxyl or amino side groups that impart to the complex its reversible solubility.

10 Claims, No Drawings

United States Patent [19]
Chibata et al.
[11] **4,081,327**
[45] *** Mar. 28, 1978**

[54] **PREPARATION OF D-FRUCTOSE**

[75] Inventors: **Ichiro Chibata**, Suita; **Tetsuya Tosa**, Kyoto; **Tadashi Sato**, Takatsuki, all of Japan

[73] Assignee: **Tanabe Seiyaku Co., Ltd.**, Osaka, Japan

[*] Notice: The portion of the term of this patent subsequent to Feb. 12, 1991, has been disclaimed.

[21] Appl. No.: **461,509**

[22] Filed: **Apr. 17, 1974**

[30] **Foreign Application Priority Data**

Apr. 25, 1973 Japan 48-48714

[51] **Int. Cl.**[2] **C12D 13/00**; C12K 1/00; C07G 7/02
[52] **U.S. Cl.** ..... **195/31 F**; 195/54; 195/59, 195/63; 195/68; 195/DIG. 11
[58] **Field of Search** ..... 195/31 F, 64, 59, 63, 195/68, DIG. 11, 102, 31 R

[56] **References Cited**

U.S. PATENT DOCUMENTS

3,788,950	1/1974	Hicks et al.	195/63 X
3,791,926	2/1974	Chibata et al.	195/59 X
3,817,832	2/1974	Lloyd et al.	195/31 F
3,843,442	10/1974	Moskowitz	195/31 F

OTHER PUBLICATIONS

Strandberg et al., Free and Immobilized Glucose Isomerase from *Streptomyces Phaeochromogenes*, Applied Microbiology, vol. 21, No. 4, 1971 (pp. 588-593).
Franks, N. E., Catabolism of L-Arginine by Entrapped Cells of *Streptococcus Faecalis* ATCC 8043, Biochimica et Biophysica ACTA, vol. 252, 1971 (pp. 246-254).

Primary Examiner—David M. Naff
Attorney, Agent, or Firm—Bierman & Bierman

[57] **ABSTRACT**

An immobilized glucose isomerase-producing microorganism is reacted with D-glucose to produce D-fructose. Immobilization is carried out by polymerizing at least one acryloyl monomer in an aqueous suspension containing a glucose isomerase-producing microorganism. The acryloyl monomers employed include acryloylamide, N,N'-lower alkylene-bis-acryloylamide, bis(acryloylamidomethyl)ether and N,N'-di-acryloyl-ethyleneurea.

14 Claims, No Drawings

United States Patent [19]
Verwaerde et al.
[11] **4,279,931**
[45] **Jul. 21, 1981**

[54] **NON-CARIOGENIC HYDROGENATED STARCH HYDROLYSATE FOR CONFECTIONERY AND PROCESS FOR PREPARING THIS HYDROLYSATE**

[75] Inventors: **Francoise Verwaerde; Jean-Bernard Leleu; Michel Huchette,** all of Lestrem, France

[73] Assignee: **Roquette Freres,** France

[21] Appl. No.: **38,711**

[22] Filed: **May 14, 1979**

[30] **Foreign Application Priority Data**

Dec. 11, 1978 [FR] France 78 34830

[51] **Int. Cl.**[3] **A23L 1/09; C13K 7/00**
[52] **U.S. Cl.** **426/48;** 426/548; 426/658; 127/38; 435/95; 435/98
[58] **Field of Search** 426/48, 548, 661, 658; 435/95, 98; 127/38, 40

[56] **References Cited**

U.S. PATENT DOCUMENTS

Re. 26,959	9/1970	Conrad	426/48
2,822,303	2/1958	Campbell et al.	426/48 X
2,891,869	6/1959	Lanclois	426/48
3,067,066	12/1962	Ehrenthal et al.	426/48 X
3,137,639	6/1964	Hurst et al.	426/48 X
3,644,126	2/1972	Bodnar et al.	426/48
3,868,464	2/1975	Koaze et al.	426/48

FOREIGN PATENT DOCUMENTS

1517810	9/1969	Fed. Rep. of Germany
2000580	9/1969	France .
1299206	12/1972	United Kingdom

Primary Examiner—Robert A. Yoncoskie
Attorney, Agent, or Firm—Larson and Taylor

[57] **ABSTRACT**

The invention relates to a non-cariogenic hydrogenated starch for confectionery and process for preparing this hydrolysate. This hydrogenated starch hydrolysate comprises a content of polyols of DP higher than 20 which is sufficiently low for the cariogenic character of these polyols not to be troublesome and a content of low molecular weight products, which is sufficiently low for their presence not to interfere with the applicability of said hydrolysates in confectionery. The hydrogenated starch hydrolysate can be used in the manufacture of "hard candies" and chewing gums.

10 Claims, No Drawings

United States Patent [19]
Martensson
[11] **3,996,107**
[45] **Dec. 7, 1976**

[54] **ENZYMATIC PRODUCTION OF A STARCH CONVERSION PRODUCT HAVING A HIGH MALTOSE CONTENT**

[75] Inventor: **Kaj Bennedick Martensson,** Lund, Sweden

[73] Assignee: **AB Stadex,** Malmo, Sweden

[22] Filed: **Aug. 28, 1974**

[21] Appl. No.: **501,397**

[30] **Foreign Application Priority Data**

Aug. 28, 1973 Sweden 7311642

[52] **U.S. Cl.** ..... **195/31 R;** 195/63; 195/68; 195/DIG. 11
[51] **Int. Cl.**[2] **C12D 13/02**
[58] **Field of Search** ..... 195/DIG. 11, 31 R, 7, 195/11, 63, 68, 115

[56] **References Cited**

UNITED STATES PATENTS

3,627,638	12/1971	Barker et al.	195/63
3,677,896	7/1972	Kurimoto et al.	195/31 R
3,702,804	11/1972	Barker et al.	195/63
3,720,583	3/1973	Fisher et al.	195/115
3,809,613	5/1974	Vieth et al.	195/DIG. 11
3,838,006	9/1974	Hijiya et al.	195/31 R
3,843,446	10/1974	Vieth et al.	195/68
3,847,743	11/1974	Forgione et al.	195/63
3,849,253	11/1974	Harvey et al.	195/DIG. 11

OTHER PUBLICATIONS

Barker et al, "Enzyme Reactors for Industry", Process Biochemistry, vol. 6, No. 10, 1971 pp. 11–13.
Martensson et al., "Covalent Coupling of Pullulanase to an Acrylic Copolymer Using a Water-soluble Carbodimide," *Chemical Abstracts*, vol. 77, No. 17, p. 160, abs. No. 110853c (1972).

Primary Examiner—A. Louis Monacell
Assistant Examiner—Thomas G. Wiseman
Attorney, Agent, or Firm—Ladas, Parry, Von Gehr, Goldsmith & Deschamps

[57] **ABSTRACT**

The invention provides a method of enzymatic manufacturing of a starch conversion product having a high maltose content, using as a starting material a solution of a substrate, the method comprising bringing the substrate solution into contact with a matrix to which have been coupled both an α-1,6-glucosidase and an α-1,4-glucosidase having β-amylase activity.

10 Claims, 1 Drawing Figure

United States Patent [19]
McMullen et al.
[11] **4,138,290**
[45] **Feb. 6, 1979**

[54] **GLUCOSE ISOMERIZATION UNDER EXPANDED BED CONDITIONS**

[75] Inventors: **William H. McMullen,** Norwalk, Conn.; **William Carasik,** Ridgewood, N.J.

[73] Assignee: **Novo Laboratories, Incorporated,** Wilton, Conn.

[21] Appl. No.: **679,445**

[22] Filed: **Apr. 22, 1976**

[51] **Int. Cl.**[2] **C12D 13/02**
[52] **U.S. Cl.** ..... **195/31 F;** 195/63; 195/68; 195/DIG. 11; 195/115
[58] **Field of Search** ..... 195/65, 63, 68, 115, 195/31 F, 116, DIG. 11

[56] **References Cited**

U.S. PATENT DOCUMENTS

3,821,086	6/1974	Lee et al.	195/116
3,928,143	12/1975	Coughlin	195/115
3,960,663	6/1976	Tamura et al.	195/31 F
3,980,521	9/1976	Amotz et al.	195/63

OTHER PUBLICATIONS

Emery et al., "Some Applications of Solid-Phase Enzymes in Biological Engineering", Birmingham Univ. Chem. Engineer, vol. 22, No. 2, (Summer 1971), pp. 37–41.
Barker et al., "Enzyme Reactors for Industry", Process Biochemistry, vol. 6, No. 10 (Oct. 1971), pp. 11–13.

Primary Examiner—Raymond N. Jones
Assistant Examiner—Thomas G. Wiseman
Attorney, Agent, or Firm—Fidelman, Wolffe & Waldron

[57] **ABSTRACT**

Expanded bed isomerization of glucose syrup to a glucose-fructose mixture having a fructose proportion exceeding about 40% of the glucose-fructose content by passing 30–55% w/w of glucose syrup through a cell-mass glucose isomerase preparation in the form of a bed of uniform particles of controlled size in the range of 150–2000 micrometers at a superficial syrup velocity of 0.5–15 meters an hour. Velocity and particle size are inversely related to create bed expansion within the range of 5–100%.

Bed life may be extended by substituting fresh catalyst for inactivated catalyst.

The isomerase should have an activity exceeding about 100 IGIC u/gm.

The isomerase should be weighted by incorporation therein of finely divided alumina particles.

5 Claims, No Drawings

United States Patent [19]
Leach et al.
[11] **4,113,509**
[45] **Sep. 12, 1978**

[54] **ENZYMATICALLY PRODUCED MALTOSE-MALTOTRIOSE STARCH HYDROLYSATE**

[75] Inventors: **Harry Woods Leach,** Willow Brook; **Ronald Emil Hebeda,** Woodridge; **Dennis John Holik,** Naperville, all of Ill.

[73] Assignee: **CPC International Inc.,** Englewood Cliffs, N.J.

[21] Appl. No.: **721,926**

[22] Filed: **Sep. 9, 1976**

Related U.S. Application Data

[63] Continuation of Ser. No. 577,523, May 14, 1975, abandoned, which is a continuation-in-part of Ser. No. 437,452, Jan. 28, 1974, Pat. No. 3,915,618, which is a continuation-in-part of Ser. No. 349,899, Apr. 10, 1973, abandoned.

[51] **Int. Cl.**[2] **C13K 1/06; C12D 13/02**
[52] **U.S. Cl.** ..... **127/29;** 195/31 R
[58] **Field of Search** 127/29, 39, 36, 38; 195/29, 34, 36, 38

[56] **References Cited**

U.S. PATENT DOCUMENTS

3,535,123	10/1976	Heady	195/31 R
3,791,865	2/1974	Hurst et al.	195/31 R

OTHER PUBLICATIONS

Whelan et al., "The Mechanism of Carbohydrase Action, Part II, α-Amylolysis of Linear Substrates", *Journal of the Chemical Society*, (Apr. 1953), pp. 1298–1304.
Bird et al., "The Action of Some α-Amylases on Amylose", *Biochem. Journal*, vol. 56, (1954), pp. 86–99.
Saito, "A Thermophilic Extracellular Alpha-Amylase from Bacillus Licheniforms", *Arch. Biochem. Biophys.*, vol. 155, (1973), pp. 290–298.

Primary Examiner—Raymond N. Jones
Assistant Examiner—Thomas G. Wiseman

[57] **ABSTRACT**

A process for converting granular starch to a soluble hydrolysate wherein the unconverted starch retains its granular nature. The conversion is accomplished by means of a bacterial alpha-amylase.

2 Claims, No Drawings

United States Patent [19]
Fritze et al.
[11] **4,254,150**
[45] **Mar. 3, 1981**

[54] **PROCESS FOR PRODUCING A FOODSTUFF OF CEREAL**

[75] Inventors: **Hartwig Fritze**, Weingarten; **Kurt Koenemann; Richard Koenemann**, both of Neuss, all of Fed. Rep. of Germany

[73] Assignee: **Escher Wyss G.m.b.H.**, Ravensburg, Fed. Rep. of Germany

[21] Appl. No.: **970,985**

[22] Filed: **Dec. 19, 1978**

[30] **Foreign Application Priority Data**

Dec. 21, 1977 [DE] Fed. Rep. of Germany 2757036

[51] **Int. Cl.**[3] **C12P 19/14**; C12P 19/20; A23K 1/00

[52] **U.S. Cl.** **426/18**; 426/49; 426/52; 426/53; 426/74; 426/520; 426/518; 426/524; 426/457; 435/96; 435/99

[58] **Field of Search** ..... 426/518, 520, 28, 524, 426/18, 49, 74, 52, 53, 96, 457; 195/31 R; 127/29; 435/96, 99

[56] **References Cited**

U.S. PATENT DOCUMENTS

3,137,639	6/1964	Hurst et al.	195/31 R
3,249,512	5/1966	Bode	425/28 X
3,280,006	10/1966	Hurst et al.	195/31 R
3,311,542	3/1967	Kerr	435/96
3,336,137	8/1967	Hickey	426/28
3,617,300	11/1971	Borochoff et al.	426/28
3,663,369	5/1972	Morehouse et al.	195/31 R
3,910,820	10/1975	Holt et al.	195/31 R
3,922,196	11/1975	Leach et al.	195/31 R
3,922,198	11/1975	Kuske et al.	195/31 R X
4,056,636	11/1977	Muller	195/31 R X

Primary Examiner—R. B. Penland
Attorney, Agent, or Firm—Robert A. Ostmann

[57] **ABSTRACT**

In a process for producing a foodstuff, more particularly a fodder from cereal, it is disclosed to saccharify the starch contained in the cereal to form dextrose by enzymatic degradation of the starch in the cereal grain. All the cereal substances, both those containing starch and those not containing starch, are treated together in the process of enzymatic degradation of the starch in the cereal grain until the starch has been converted to dextrose in the cereal grain. The product is then dried.

8 Claims, 1 Drawing Figure

United States Patent [19]
Walon
[11] **4,217,414**
[45] **Aug. 12, 1980**

[54] **PROCESS FOR SEPARATING AND RECOVERING VITAL WHEAT GLUTEN FROM WHEAT FLOUR AND THE LIKE**

[75] Inventor: **Raoul G. P. Walon**, Brussels, Belgium

[73] Assignee: **CPC International Inc.**, Englewood Cliffs, N.J.

[21] Appl. No.: **922,910**

[22] Filed: **Jul. 10, 1978**

Related U.S. Application Data

[63] Continuation-in-part of Ser. No. 802,860, Jun. 2, 1977, abandoned, which is a continuation of Ser. No. 737,248, Nov. 1, 1976, abandoned.

[30] **Foreign Application Priority Data**

Oct. 28, 1977 [BE] Belgium 860225

[51] **Int. Cl.**[2] **C12P 19/22**; C12P 19/20; C12P 19/14; C07G 7/00

[52] **U.S. Cl.** **435/95**; 435/96; 435/99; 435/272

[58] **Field of Search** ..... 195/4, 7, 11, 31 R, 195/62, 66 R; 426/7, 18, 42, 44, 48, 52, 656, 658, 661; 260/112 G; 435/95, 96, 99, 272, 274

[56] **References Cited**

U.S. PATENT DOCUMENTS

3,337,414	8/1967	Wilson	195/31 R
3,782,964	1/1974	Knight	195/4 X
3,922,199	11/1975	Hebeda et al.	195/31 R
3,951,938	4/1976	Kerkkonen et al.	260/112 G

Primary Examiner—Thomas G. Wiseman
Attorney, Agent, or Firm—Stanley M. Parmerter

[57] **ABSTRACT**

A mixture of vital wheat gluten and starch containing at least 25% protein, e.g. a protein-rich fraction of wheat flour, is treated with a bacterial alpha-amylase (preferably substantially free of protease) under conditions which solubilize the starch but do not unduly solubilize, or denature, the vital gluten. Specifically, the temperature should be not above about 80° C. and the time of treatment should not exceed about 6 hours. After the enzymatic treament the gluten, which still retains its vital properties, is separated out, and the solubilized starch fraction is recovered or subjected to further processing.

16 Claims, No Drawings

United States Patent [19]
Mueller et al.
[11] **4,202,939**
[45] **May 13, 1980**

[54] **GLUCOAMYLASE IMMOBILIZED ON CATIONIC COLLOIDAL SILICA**

[75] Inventors: **Nancy J. Mueller**, Lyons; **Dennis J. Holik**, Naperville, both of Ill.

[73] Assignee: **CPC International Inc.**, Englewood Cliffs, N.J.

[21] Appl. No.: **829,690**

[22] Filed: **Sep. 1, 1977**

[51] **Int. Cl.**[2] **C12D 13/04**; C07G 7/02

[52] **U.S. Cl.** **435/96**; 435/177; 435/205

[58] **Field of Search** ..... 195/31 R, 63, 68, DIG. 11; 435/176, 205, 96

[56] **References Cited**

U.S. PATENT DOCUMENTS

3,556,945	1/1971	Messing	195/63
3,796,634	3/1974	Haynes et al.	195/63
3,802,997	4/1974	Messing	195/63 X
4,011,137	3/1977	Thompson et al.	195/63 X
4,132,595	1/1979	Hebeda et al.	195/31 R
4,144,127	3/1979	Enokizono et al.	195/31 F X

OTHER PUBLICATIONS

Properties, Uses, Storage and Handling LUDOX Colloidal Silica, E. I. Du Pont de Nemours & Co., Inc., Wilmington, Del., 10/1975 (pp. 1–20).

Primary Examiner—David M. Naff
Attorney, Agent, or Firm—Stanley M. Parmerter

[57] **ABSTRACT**

A process for production of dextrose from starch wherein a starch hydrolyzate produced using soluble α-amylase or a combination of soluble glucoamylase and α-amylase is treated with glucoamylase immobilized on a cationic colloidal silica to produce a dextrose-containing syrup.

8 Claims, No Drawings

United States Patent [19]
Abdullah et al.
[11] **4,226,937**
[45] **Oct. 7, 1980**

[54] **METHOD USING GLUCOAMYLASE IMMOBILIZED ON POROUS ALUMINA**

[75] Inventors: **Mukhtar Abdullah**, Downers Grove; **Frederick C. Armbruster**, LaGrange, both of Ill.

[73] Assignee: **CPC International Inc.**, Englewood Cliffs, N.J.

[21] Appl. No.: **33,913**

[22] Filed: Apr. 27, 1979

[51] Int. Cl.[2] C12P 19/20

[52] U.S. Cl. 435/96

[58] Field of Search ..... 435/96; 127/40, 46 A

[56] **References Cited**

U.S. PATENT DOCUMENTS

4,011,137	3/1977	Thompson et al.	435/96
4,132,595	1/1979	Hebeda et al.	435/96

Primary Examiner—Lionel M. Shapiro
Attorney, Agent, or Firm—Stanley M. Parmerter

[57] **ABSTRACT**

A process for the production of dextrose-containing syrups wherein a deionized starch hydrolyzate is treated with glucoamylase immobilized on porous alumina.

7 Claims, No Drawings

United States Patent [19]
Miyake
[11] 4,219,571
[45] Aug. 26, 1980

[54] PROCESS FOR PRODUCING A SWEETENER

[75] Inventor: Toshio Miyake, Okayama, Japan

[73] Assignee: Kabushiki Kaisha Hayashibara Seibutsu Kagaku Kenkyujo, Okayama, Japan

[21] Appl. No.: 915,876

[22] Filed: Jun. 15, 1978

[51] Int. Cl.² A23L 1/236
[52] U.S. Cl. 426/48; 426/52; 426/658; 426/804; 435/78; 435/96; 435/97; 435/99
[58] Field of Search ..... 426/48, 658, 548, 804, 426/661, 49, 52; 195/31 R; 435/78, 96, 97, 99

[56] References Cited

U.S. PATENT DOCUMENTS

2,742,365	4/1956	Corman et al.	426/48
3,819,484	6/1974	Okada et al.	195/31 R
4,082,858	4/1978	Morita et al.	426/658 X

OTHER PUBLICATIONS

Kohda et al., *Phytochemistry*, 15, (1976), 981-983.

Primary Examiner—Esther M. Kepplinger
Attorney, Agent, or Firm—Browdy and Neimark

[57] ABSTRACT

A sweetener containing alpha-glycosyl stevioside which is obtained by allowing alpha-glucosyltransferase to react on an aqueous solution containing stevioside and alpha-glucosyl sugar compound.

5 Claims, 4 Drawing Figures

United States Patent [19]
Walon
[11] 4,199,372
[45] Apr. 22, 1980

[54] PROCESS FOR PREPARING MALTOSE-CONTAINING STARCH HYDROLYZATE AND CRYSTALLIZATION OF MALTOSE THEREFROM

[75] Inventor: Raoul G. P. Walon, Brussels, Belgium

[73] Assignee: CPC International Inc., Englewood Cliffs, N.J.

[21] Appl. No.: 1,661

[22] Filed: Jan. 8, 1979

[30] Foreign Application Priority Data

Jan. 12, 1978 [GB] United Kingdom 129/78

[51] Int. Cl.² C12P 19/20
[52] U.S. Cl. 127/40; 435/96; 435/99
[58] Field of Search 435/96, 99; 127/38, 127/40

[56] References Cited

U.S. PATENT DOCUMENTS

4,028,186	6/1977	Sakai	435/99
4,032,403	6/1977	Sakai et al.	435/99 X

Primary Examiner—Lionel M. Shaprio

[57] ABSTRACT

Crystalline maltose in good yields is obtained by subjecting a starch hydrolyzate having a maltose content of at least 75% and a viscosity of greater than 400 cps. to the action of glucoamylase, whereby the viscosity is reduced to below 400 cps. without any substantial reduction in the maltose content, and then subjecting the resulting hydrolyzate to a conventional crystallization operation.

6 Claims, No Drawings

United States Patent [19]
Hebeda et al.
[11] 4,132,595
[45] Jan. 2, 1979

[54] DEXTROSE PRODUCTION WITH IMMOBILIZED GLUCOAMYLASE

[75] Inventors: Ronald E. Hebeda; Dennis J. Holik, both of Naperville; Harry W. Leach, Willowbrook, all of Ill.

[73] Assignee: CPC International Inc., Englewood Cliffs, N.J.

[21] Appl. No.: 750,035

[22] Filed: Dec. 13, 1976

[51] Int. Cl.² C12D 13/02
[52] U.S. Cl. ..... 195/31 R
[58] Field of Search ..... 195/31 R, 63, 68, 115, 195/13

[56] References Cited

U.S. PATENT DOCUMENTS

3,806,415	4/1974	Hayes	195/31 R
3,915,797	10/1975	Ishimatsu et al.	195/29
4,011,137	3/1977	Thompson et al.	195/31 R
4,017,363	4/1977	McMullen et al.	195/31 R

FOREIGN PATENT DOCUMENTS

2538322	3/1976	Fed. Rep. of Germany	195/31 R

OTHER PUBLICATIONS

Weetall et al., "Scale-Up Studies on Immobilized, Purified Glucoamylase, Covalently Coupled to Porous Ceramic Support", *Immobilized Enzyme Technology*, Weetall et al., ed., Plenum Press, N.Y., (1975), pp. 269-297.
Lee et al., "Continuous Production of Glucose from Dextrin by Glucoamylase Immobilized on Porous Silica", *Die Starke*, vol. 27, No. 11, (1975), pp. 384-387.
Lee et al. "Pilot Plant Production of Glucose with Glucoamylase Immobilized to Porous Silica", *Biotech Bioeng.*, vol. 18, (1976), pp. 253-267.
Lee et al., "Continuous Production of Glucose From Dextrin by Glucoamylase Immobilized on Porous Silica", Paper 601, 10th ACS Midwest Meeting, Nov. 7, 1974.

Primary Examiner—Thomas G. Wiseman
Attorney, Agent, or Firm—David H. LeRoy; John P. Floyd

[57] ABSTRACT

A process for production of dextrose from starch wherein a starch hydrolysate having a high dextrose equivalent produced using soluble glucoamylase is treated solely with an immobilized glucoamylase enzyme to produce a dextrose product.

12 Claims, No Drawings

United States Patent [19]
Horikoshi et al.
[11] 4,135,977
[45] Jan. 23, 1979

[54] PROCESS FOR PRODUCTION OF CYCLODEXTRIN

[75] Inventors: Koki Horikoshi, Tokyo; Nobuyuki Nakamura, Kunitachi, both of Japan

[73] Assignee: Rikagaku Kenkyusho, Wako, Japan

[21] Appl. No.: 843,263

[22] Filed: Oct. 18, 1977

Related U.S. Application Data

[63] Continuation-in-part of Ser. No. 584,653, Jun. 6, 1975, abandoned.

[30] Foreign Application Priority Data

Jun. 20, 1974 [JP] Japan 49-70377

[51] Int. Cl.² C12D 13/02
[52] U.S. Cl. ..... 195/7; 195/13; 195/31 R
[58] Field of Search ..... 195/4, 7, 13, 31 R, 195/66 R, 62, 65

[56] References Cited

U.S. PATENT DOCUMENTS

3,425,910	2/1969	Armbruster et al.	195/31 R
3,806,415	4/1974	Hayes	195/31 R
3,923,598	12/1975	Horikoshi	195/31 R

OTHER PUBLICATIONS

Suetsugi et al., "Kinetic Studies on the Hydrolysis of α,β, and γ-cyclodextrins", Chemical Abstracts, vol. 81, No. 19, p. 211 (1974), Abs. No. 116567s.

Primary Examiner—Thomas G. Wiseman
Attorney, Agent, or Firm—Bucknam and Archer

[57] ABSTRACT

This invention provides a novel process for producing cyclodextrin by reacting cyclodextrin glycosyl transferase having an optimum pH on the alkaline side with gelatinized starch. According to this invention, cyclodextrin can be obtained in the form of a pure crystal in a high yield by reacting a glucomylase with the reaction mixture liquid formed by the above enzymatic reaction to decompose unreacted starch, concentrating the liquid, adding a small amount of cyclodextrin as a seed crystal and recovering the precipitated cyclodextrin.

3 Claims, 4 Drawing Figures

United States Patent [19]
Kerkhoffs
[11] **4,277,563**
[45] **Jul. 7, 1981**

[54] **PREPARATION OF FRUCTOSE**

[75] Inventor: **Pieter L. Kerkhoffs**, Geleen, Netherlands

[73] Assignee: **Stamicarbon, B.V.**, Geleen, Netherlands

[21] Appl. No.: **95,680**

[22] Filed: **Nov. 19, 1979**

[30] **Foreign Application Priority Data**

Nov. 18, 1978 [NL] Netherlands 7811389

[51] **Int. Cl.**[3] **C12P 19/14**
[52] **U.S. Cl.** **435/99**; 435/105; 435/276
[58] **Field of Search** 435/95, 99, 105, 276

[56] **References Cited**

FOREIGN PATENT DOCUMENTS

50-160479 12/1975 Japan 435/105

OTHER PUBLICATIONS

Methods in Enzymology, vol. 8, pp. 625-627 (1966).

Primary Examiner—Lionel M. Shapiro
Attorney, Agent, or Firm—Cushman, Darby & Cushman

[57] **ABSTRACT**

Fructose in a purified form is recovered from plant parts containing fructose polymer, such as inulin, by treatment of the mixed plant parts with an aqueous solution of fructose polymer hydrolyzing enzyme, such as inulase, followed by recovering the remaining solid plant parts and recovering fructose crystals from the aqueous solution.

9 Claims, No Drawings

United States Patent [19]
Pratt et al.
[11] **4,251,630**
[45] **Feb. 17, 1981**

[54] **PREPARATION OF MALT HIGH IN ALPHA-1,6-HYDROLASE**

[75] Inventors: **George W. Pratt**, Milwaukee, Wis.; **Thomas W. Chapple**, Sierra Madre, Calif.; **Michael J. Fahy**, Golden, Colo.

[73] Assignee: **Kurth Malting Corporation**, Milwaukee, Wis.

[21] Appl. No.: **928,812**

[22] Filed: **Jul. 28, 1978**

[51] **Int. Cl.**[3] **C12P 19/16**; C12P 19/12; A23L 1/202; C12C 1/04
[52] **U.S. Cl.** **435/98**; 426/16; 426/29; 426/64; 435/93; 435/99; 435/100; 435/185
[58] **Field of Search** 426/11, 16, 29, 64; 435/93, 185, 100, 98, 99

[56] **References Cited**

U.S. PATENT DOCUMENTS

3,908,021 9/1975 Rehberger et al. 426/16

OTHER PUBLICATIONS

DeClerck J. A. Textbook of Brewing, vol. one Chapman & Hall Ltd., London 1957, (pp. 140-156 and 181-187).
Radley, J. A., Starch and Its Derivatives, vol. 2, 3rd ed. Chapman & Hall Ltd. London, 1953, (pp. 78-80).

Primary Examiner—David M. Naff
Attorney, Agent, or Firm—Merriam, Marshall & Bicknell

[57] **ABSTRACT**

Malt having a high content of alpha-1,6-hydrolase activity is prepared by germinating previously steeped barely until the average acrospire reaches a length of at least 1¼ times the average length of the kernals and it contains at least 55 units of alpha-1,6-hydrolase activity per gram of malt. The malt provides more complete hydrolyzing of starch to glucose and maltose, and it is useful in producing low carbohydrate beer, in producing distilled alcoholic beverages and in producing maltose syrup.

4 Claims, No Drawings

United States Patent [19]
Muller et al.
[11] **4,266,027**
[45] **May 5, 1981**

[54] **PROCESS FOR THE HYDROLYSIS OF STARCH AND FERMENTABLE HYDROLYSATES OBTAINED THEREFROM**

[75] Inventors: **Werner C. Muller**, Dobbs Ferry, N.Y.; **Franklyn D. Miller**, Cincinnati, Ohio

[73] Assignee: **National Distillers and Chemical Corp.**, New York, N.Y.

[21] Appl. No.: **129,517**

[22] Filed: **Mar. 12, 1980**

[51] **Int. Cl.**[3] **C13K 1/06**
[52] **U.S. Cl.** ..... **435/99**; 127/38; 127/46 A; 127/70
[58] **Field of Search** ..... 127/38, 39, 46 A, 70, 127/71; 435/99

[56] **References Cited**

U.S. PATENT DOCUMENTS

2,606,847	8/1952	Newkirk	127/46 A X
2,770,562	11/1956	Fetzer	127/38 X
3,383,245	5/1968	Scallet	127/38 X
3,592,734	7/1971	Kroyer	435/99 X
3,616,219	10/1971	Massey	435/99
3,690,948	9/1972	Katz	127/46 A
3,912,590	10/1975	Slott	435/99
3,922,196	11/1975	Leach	435/99 X
3,922,199	11/1975	Hebeda	435/99

Primary Examiner—Sidney Marantz
Attorney, Agent, or Firm—Kenneth D. Tremain

[57] **ABSTRACT**

An aqueous starch slurry is initially hydrolyzed in the presence of acid or enzyme and thereafter, the liquefied starch is saccharified in the presence of an acid cationic exchange resin to provide a sterile aqueous solution containing at least about 60 weight percent fermentable sugar based on the weight of the original starch present.

17 Claims, 1 Drawing Figure

United States Patent [19]
Tsao et al.
[11] **4,266,981**
[45] **May 12, 1981**

[54] **PROCESS FOR RECOVERING AND UTILIZING CELLULOSE USING SULFURIC ACID**

[75] Inventors: **George T. Tsao**; **Terry Y. Chou**, both of West Lafayette, Ind.

[73] Assignee: **Purdue Research Corporation**, West Lafayette, Ind.

[21] Appl. No.: **81,538**

[22] Filed: **Oct. 3, 1979**

[51] **Int. Cl.**[3] **C13K 1/02**
[52] **U.S. Cl.** **127/37**; 162/76; 162/82; 435/99
[58] **Field of Search** 127/37; 435/99; 162/76, 162/82

[56] **References Cited**

U.S. PATENT DOCUMENTS

2,302,022	11/1942	Giordani	127/37
2,465,347	3/1949	Boehm	127/37
3,212,933	10/1965	Hess	127/37
3,972,775	8/1976	Wilke	435/99

Primary Examiner—Sidney Marantz
Attorney, Agent, or Firm—John R. Nesbitt; Robert E. Harris

[57] **ABSTRACT**

A process for recovering cellulose using sulfuric acid and utilizing the recovered cellulose by hydrolysis to yield glucose. Cellulosic raw materials are hydrolyzed by dilute sulfuric acid to remove hemicellulose, after which the solid residue is separated and is treated with concentrated sulfuric acid to dissolve cellulose contained therein. After blending and mixing of the residue in the concentrated sulfuric acid under mild reaction conditions, cellulose is reprecipitated by addition of water or an organic solvent such as methanol. The recovered cellulose can then be hydrolyzed by cellulose enzymes and/or dilute acids to provide a high yield of glucose. High level recovery and reconcentration of the sulfuric acid is also disclosed.

19 Claims, No Drawings

United States Patent [19]

Honda et al.

[11] **4,242,450**

[45] **Dec. 30, 1980**

[54] **METHOD OF HYDROLYZING SUGAR, PROTEIN OR THE LIKE AND APPARATUS THEREFOR**

[75] Inventors: **Yoshihiko Honda**, Hidaka; **Masanobu Koutake**, Kodaira; **Hidege Kanazawa**, Kiyose; **Taisuke Iwasaki**, Hino; **Shozo Ohba**, Sayama; **Honoh Hashiba**, Tokorozawa; **Gosei Kawanishi**, Ichikawa, all of Japan

[73] Assignee: **Snow Brand Milk Products Co., Ltd.**, Sapporo, Japan

[21] Appl. No.: **65,439**

[22] Filed: **Aug. 10, 1979**

[30] **Foreign Application Priority Data**

Sep. 6, 1978 [JP] Japan 53-109260

[51] **Int. Cl.**[3] **C12M 1/40**; C12P 1/00

[52] **U.S. Cl.** **435/69**; 435/41; 435/105; 435/262; 435/288

[58] **Field of Search** 435/288, 41, 69, 105, 435/262

[56] **References Cited**

U.S. PATENT DOCUMENTS

3,767,535	10/1973	Havewala et al.	435/41
3,809,613	5/1974	Vieth et al.	435/288

OTHER PUBLICATIONS

Vieth et al., "Design and Analysis of Immobilized-Enzyme Flow Reactors", in Applied Biochemistry & Bioengineering (Wingard et al.,Editors), vol. 1, pp. 221-234 (1976).

Pitcher, "Design and Operation of Immobilized Enzyme Reactors", in Advances in Biochemical Engineering, vol. 10, pp. 1 to 5 (1978).

Primary Examiner—Lionel M. Shapiro

Attorney, Agent, or Firm—Murray and Whisenhunt

[57] **ABSTRACT**

This method of hydrolyzing sugar, protein or the like and apparatus are advantageous especially in achieving the effective exhibition of the activity of immobilized enzymes, which method comprises jet-dispersing a constant-temperature aqueous solution containing a substrate such as sugar, protein or the like through an orifice and a net and making the same react in contact with a rotating immobilized enzyme.

14 Claims, 3 Drawing Figures

United States Patent [19]

Antrim et al.

[11] **4,089,745**

[45] *** May 16, 1978**

[54] **PROCESS FOR ENZYMATICALLY CONVERTING CELLULOSE DERIVED FROM CORN HULLS TO GLUCOSE**

[75] Inventors: **Richard Lee Antrim**, Clinton; **Donald Wayne Harris**, Camanche, both of Iowa

[73] Assignee: **Standard Brands Incorporated**, New York, N.Y.

[*] Notice: The portion of the term of this patent subsequent to Jul. 26, 1994, has been disclaimed.

[21] Appl. No.: **754,727**

[22] Filed: **Dec. 27, 1976**

[51] **Int. Cl.**[2] **C12D 13/02**

[52] **U.S. Cl.** **195/33**

[58] **Field of Search** ..... 195/31 R, 33, 8, 9; 127/37; 536/1, 56

[56] **References Cited**

U.S. PATENT DOCUMENTS

1,864,746	6/1932	Legg et al.	195/33
2,801,955	8/1957	Rutenberg et al.	195/9
3,764,475	10/1973	Mandels et al.	195/33
3,812,012	5/1974	Buschmann et al.	195/33
4,038,481	7/1977	Antrim et al.	536/56

OTHER PUBLICATIONS

Andren et al., "Production of Sugars From Waste Cellulose by Enzymatic Hydrolysis, Part I: Primary Evaluation of Substrates;" presented at 8th Cellulose Conference, SUNY, Syracuse, N.Y., May 19-23, 1975.

Spano et al., *Enzymatic Hydrolysis of Cellulose Wastes to Glucose*, Publication from U.S. Army Natick Development Center, Sep. 8, 1975.

Andren et al., "Production of Sugars From Waste Cellulose by Enzymatic Hydrolysis: Primary Evaluation of Substrates," *Process Biochemistry*, Oct. 1976, pp. 2-11.

Hajny et al., *Cellulases and Their Applications*, American Chemical Society, Washington, D.C., (1969) pp. 244, 323, 324.

Primary Examiner—Raymond N. Jones

Assistant Examiner—Thomas G. Wiseman

[57] **ABSTRACT**

Corn hulls are subjected to a liquid extraction treatment whereby the major portion of the cellulose is liberated from the other constituents of the corn hulls and the resulting cellulose fraction is enzymatically treated to convert a substantial portion thereof to glucose.

5 Claims, No Drawings

United States Patent [19]

Neidleman et al.

[11] **4,246,347**

[45] **Jan. 20, 1981**

[54] **PROCESS FOR THE PRODUCTION OF FRUCTOSE**

[75] Inventors: **Saul L. Neidleman**, Oakland; **William F. Amon, Jr.**, Danville; **John Geigert**, Clayton, all of Calif.

[73] Assignee: **Cetus Corporation**, Berkeley, Calif.

[21] Appl. No.: **88,103**

[22] Filed: **Oct. 24, 1979**

Related U.S. Application Data

[63] Continuation-in-part of Ser. No. 39,337, May 16, 1979, and a continuation-in-part of Ser. No. 42,219, May 29, 1979.

[51] **Int. Cl.**[3] **C12P 19/02**

[52] **U.S. Cl.** **435/105**; 536/1

[58] **Field of Search** 435/105; 536/1

[56] **References Cited**

U.S. PATENT DOCUMENTS

3,050,444	8/1962	Holstein et al.	195/31
3,868,304	2/1975	Messing	195/31

OTHER PUBLICATIONS

Ruelius et al., Biochem. Biophys. Acta, vol. 167, pp. 493-500, (1968).

Volc et al., Folia Microbiol., vol. 23, pp. 292-298, (1978).

Primary Examiner—Lionel M. Shapiro

Attorney, Agent, or Firm—Fitch, Even, Tabin, Flannery & Welsh

[57] **ABSTRACT**

A process is described for the production of fructose from glucose. An aqueous solution of glucose is converted to D-glucosone by an enzymatic process. D-glucosone is then converted to substantially pure fructose by chemical hydrogenation. Fructose may be recovered in crystalline form.

14 Claims, 4 Drawing Figures

United States Patent [19]

Freytag et al.

[11] **4,097,333**

[45] **Jun. 27, 1978**

[54] **ENZYMATIC METHOD OF PRODUCING GLUCOSE FROM ETHYLENE TREATED CELLULOSE**

[75] Inventors: **Arthur H. Freytag**, Longmont; **James C. Linden**, Loveland, both of Colo.

[73] Assignee: **The Great Western Sugar Company**, Denver, Colo.

[21] Appl. No.: **808,812**

[22] Filed: **Jun. 22, 1977**

[51] **Int. Cl.**[2] **C12D 13/02**; C12B 3/06

[52] **U.S. Cl.** **195/33**; 195/9; 195/114

[58] **Field of Search** 195/9, 33, 114, 10; 127/34, 37, 44; 536/56

[56] **References Cited**

U.S. PATENT DOCUMENTS

3,642,580	2/1972	Ghose	195/33
3,764,475	10/1973	Mandels et al.	195/33
3,925,097	12/1975	Freytag et al.	127/44
3,972,775	8/1976	Wilke	195/33

Primary Examiner—Raymond N. Jones

Assistant Examiner—Thomas G. Wiseman

Attorney, Agent, or Firm—Bruce G. Klaas; Dennis K. Shelton

[57] **ABSTRACT**

Glucose yields in the enzymatic hydrolysis of cellulose to glucose are significantly enhanced by treating cellulosic material with ethylene either prior to and/or during the hydrolytic reaction.

9 Claims, 4 Drawing Figures

United States Patent [19]
Grethlein
[11] **4,237,226**
[45] **Dec. 2, 1980**

[54] **PROCESS FOR PRETREATING CELLULOSIC SUBSTRATES AND FOR PRODUCING SUGAR THEREFROM**

[75] Inventor: **Hans E. Grethlein**, Hanover, N.H.

[73] Assignee: **Trustees of Dartmouth College**, Hanover, N.H.

[21] Appl. No.: **14,474**

[22] Filed: **Feb. 23, 1979**

[51] **Int. Cl.**[3] **C13K 1/02**; C12P 7/18; C12P 7/24; C12R 1/885

[52] **U.S. Cl.** **435/99**; 127/29; 127/37; 435/105; 435/252

[58] **Field of Search** 127/37, 29; 435/105, 435/252, 99

[56] **References Cited**

U.S. PATENT DOCUMENTS

2,086,701	7/1937	Dreyfus	127/37
2,284,500	5/1942	Warth	127/37
2,752,270	6/1956	Specht	127/37
2,900,284	8/1959	Oshima	127/37
2,945,777	7/1960	Riehm	127/37
3,067,065	12/1962	Kusama	127/37
3,212,933	10/1965	Hess	127/37
3,479,248	11/1969	Nobile	127/37 X
3,523,911	8/1970	Funk	127/37 X
3,642,580	2/1972	Ghose	435/105
3,663,369	5/1972	Morehouse	435/99
3,972,775	8/1976	Wilke	435/99
3,990,945	11/1976	Huff	435/99
4,023,982	5/1977	Knduth	127/37 X
4,070,232	1/1978	Funk	127/37
4,160,695	7/1979	Dietrichs	127/37

OTHER PUBLICATIONS

Diane R. Knappert, Master of Engineering Thesis, "Enzymatic Hydrolysis by Trichoderma Cellulase," Dartmouth College, Hanover, N.H., Jun. 1978.

David R. Thompson, Master of Engineering Thesis, "Acid Hydrolysis as a Means of Converting Municipal Refuse to Ethanol", Dartmouth College, Hanover, N.H., Oct. 1977.

Primary Examiner—Sidney Marantz
Attorney, Agent, or Firm—Robert Shaw

[57] **ABSTRACT**

Processes for treating cellulosic substances prior to hydrolysis which lead to shortening hydrolysis time and to increasing sugar yield. As exemplary, an aqueous slurry of the cellulosic substance is acidified and heated to and maintained at a temperature to produce a change in the cellulosic structure; the heating period is controlled so that there is little glucose formation. The pretreated cellulose may be subsequently hydrolyzed by acid or enzyme.

34 Claims, No Drawings

United States Patent [19]
Walon
[11] **4,235,965**
[45] **Nov. 25, 1980**

[54] **STARCH HYDROLYSIS AT HIGH DRY SUBSTANCE**

[75] Inventor: **Raoul G. P. Walon**, Brussels, Belgium

[73] Assignee: **CPC International Inc.**, Englewood Cliffs, N.J.

[21] Appl. No.: **951,538**

[22] Filed: **Oct. 16, 1978**

Related U.S. Application Data

[63] Continuation of Ser. No. 793,216, May 2, 1977, abandoned.

[30] **Foreign Application Priority Data**

May 12, 1976 [BE] Belgium 2155022

[51] **Int. Cl.**[3] **C12P 19/22**; C12P 19/14

[52] **U.S. Cl.** **435/95**; 435/99; 426/48; 426/661

[58] **Field of Search** ..... 195/7, 11, 31 R, 115; 426/48, 658, 651; 127/32; 435/99, 95

[56] **References Cited**

U.S. PATENT DOCUMENTS

3,450,549	6/1969	Schwalbe	127/32 X
3,922,196	11/1975	Leach et al.	195/31 R
3,922,198	11/1975	Kuske et al.	195/31 R
3,922,199	11/1975	Hebeda et al.	195/31 R
3,922,200	11/1975	Walon	195/31 R
3,962,465	6/1976	Richter et al.	426/48
4,014,743	3/1977	Black	195/31 R

Primary Examiner—Thomas G. Wiseman
Attorney, Agent, or Firm—Stanley M. Parmerter; Janet E. Price

[57] **ABSTRACT**

Aqueous slurries of liquefied and at least partially solubilized starch of high solids concentration (substantially greater than 40%, by weight) are prepared directly by adding gradually, to an aqueous starch hydrolysate having not greater than 40% solids, granular starch in the presence of a bacterial α-amylase, under non-gelatinizing conditions, while gradually raising the temperature to not above 90° C. As a final step, the temperature can be brought to 90° C. or higher to liquefy any remaining starch.

14 Claims, No Drawings

United States Patent [19]
Emert et al.
[11] **4,220,721**
[45] **Sep. 2, 1980**

[54] **METHOD FOR ENZYME REUTILIZATION**

[75] Inventors: **George H. Emert**, Merriam; **Paul J. Blotkamp**, Olathe, both of Kans.

[73] Assignee: **University of Arkansas Foundation**, Fayetteville, Ark.

[21] Appl. No.: **33,772**

[22] Filed: **Apr. 27, 1979**

[51] **Int. Cl.**[2] **C12P 7/10**

[52] **U.S. Cl.** **435/165**; 435/99; 435/161; 435/162; 435/163; 435/209; 435/252; 435/813; 435/815

[58] **Field of Search** 435/161, 162, 163, 165, 435/99, 252, 209, 815, 813

[56] **References Cited**

U.S. PATENT DOCUMENTS

3,398,055	8/1968	Bruno	435/209
3,764,475	10/1973	Mandels et al.	435/209
3,990,944	11/1976	Gauss et al.	435/165
3,990,945	11/1976	Huff et al.	435/99

Primary Examiner—Lionel M. Shapiro
Attorney, Agent, or Firm—Donald R. Cassady

[57] **ABSTRACT**

Cellulase, an enzyme useful in the saccharification of cellulose can be recycled by a process of selective adsorption on cellulose containing materials and readmitted to the reaction mixture in a batch, semi-continuous, or continuous simultaneous saccharification-fermentation process.

6 Claims, No Drawings

United States Patent [19]
Stein et al.
[11] **4,241,185**
[45] **Dec. 23, 1980**

[54] **METHOD OF STABILIZING α-GALACTOSIDASE**

[75] Inventors: **Brooks M. Stein**, Berthoud; **James C. Linden**, Loveland, both of Colo.

[73] Assignee: **The Great Western Sugar Company**, Denver, Colo.

[21] Appl. No.: **14,579**

[22] Filed: **Feb. 23, 1979**

[51] **Int. Cl.**[3] C12N 9/96; C12N 9/40

[52] **U.S. Cl.** 435/188; 435/99; 435/174; 435/208

[58] **Field of Search** 435/94, 99, 176, 174, 435/177, 182, 188, 276, 911, 208

[56] **References Cited**

U.S. PATENT DOCUMENTS

3,647,625	3/1972	Suzuki et al.	435/276
3,666,627	5/1972	Messing	435/176
3,779,869	12/1973	Zienty	435/174
3,843,442	10/1974	Moskowitz	435/94
3,957,580	5/1976	Nelson	435/174 X

Primary Examiner—David M. Naff
Attorney, Agent, or Firm—Dennis K. Shelton; Bruce G. Klaas

[57] **ABSTRACT**

The activity of mycelial bound α-galactosidase is stabilized by treating α-galactosidase containing mycelia with about 5 to about 25 percent by weight glutaraldehyde based upon the dry weight of the mycelia. The glutaraldehyde treated mycelia may be used in the hydrolysis of oligosaccharides containing α-galactoside linkage without incurring substantial α-galactosidase activity loss during hydrolysis.

5 Claims, No Drawings

AMINO ACIDS

This profile includes processes for preparing alpha or beta amino acids, substituted amino acids, or salts by a biological transformation of matter. The transforming agent may be a microorganism, an enzyme or immobilized enzyme, or animal or plant cell culture. The profile also includes processes where a racemic mixture is treated with a microorganism or enzyme to purify it or to liberate an optically active mixture or compound.

INCLUDED IN THIS PROFILE ARE ALL OF THE PATENTS FROM:

Class 435, Subclasses 106-116 and 280

ACTIVITY INDICES (1979-1981)

GROWTH	18.0%
FOREIGN SHARE	76.3%
CORPORATE OWNED	92.1%
GOVERNMENT OWNED	0.0%
U.S. OWNED OF FOREIGN	6.9%

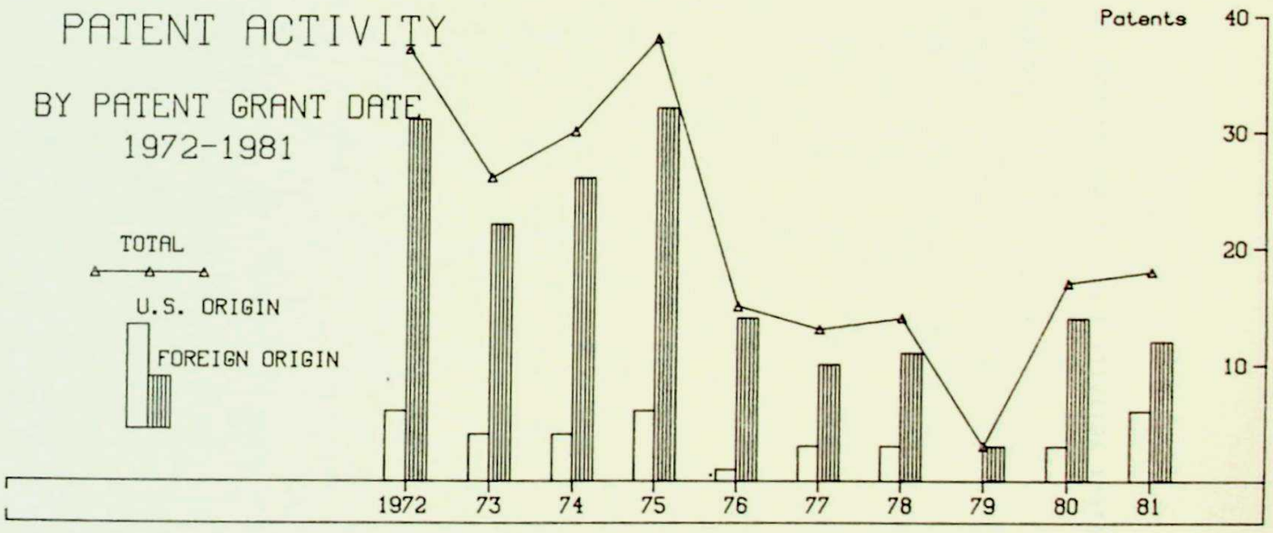

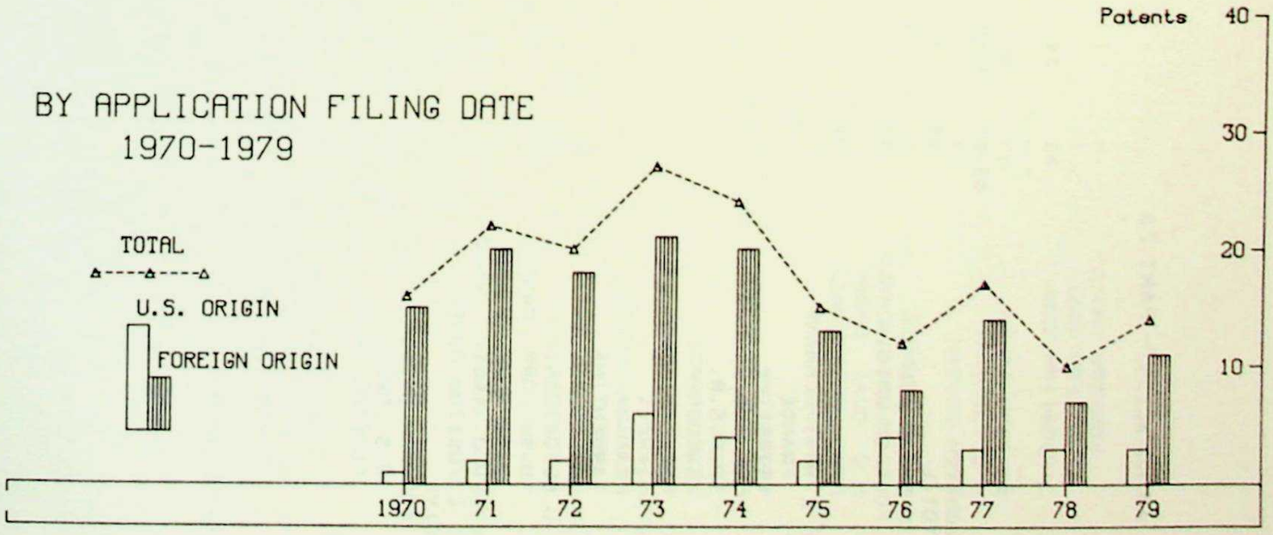

AMINO ACIDS – PART 2A

PATENT ACTIVITY (1/63-12/81) BY DATE OF PATENT GRANT

	NUMBER OF PATENTS															
	63-67	1968	1969	1970	1971	1972	1973	1974	1975	1976	1977	1978	1979	1980	1981	TOTAL
TOTAL	65	12	11	18	23	37	26	30	38	15	13	14	3	17	18	340
U.S. ORIGIN	22	3	6	2	4	6	4	4	6	1	3	3		3	6	73
FOREIGN ORIGIN	43	9	5	16	19	31	22	26	32	14	10	11	3	14	12	267
JAPAN	38	9	5	14	19	28	22	22	28	7	5	9	2	10	5	223
WEST GERMANY	3			1		1		2	1		1			1	3	13
FRANCE	1					1				4			1	1		8
ITALY						1				1	2	1			1	6
UNITED KINGDOM	1								2		1			1		5
U.S.S.R.											1			1	2	4
SWEDEN								1	1	1						3
NETHERLANDS										1		1				2
ISRAEL															1	1
CANADA								1								1
ARGENTINA				1												1
U.S. ORIGIN	22	3	6	2	4	6	4	4	6	1	3	3		3	6	73
U.S. CORP. OWNED	22	3	6	2	4	6	4	3	6	1	2	3		3	6	71
U.S. GOVT. OWNED																
U.S. INDIV. OWNED											1					1
FOREIGN OWNED								1								1
FOREIGN ORIGIN	43	9	5	16	19	31	22	26	32	14	10	11	3	14	12	267
U.S. OWNED	2			1				1						2		6
FOREIGN OWNED	41	9	5	15	19	31	22	25	32	14	10	11	3	12	12	261
FOREIGN CORP.	38	8	5	12	18	31	22	24	31	13	9	11	3	11	10	246
FOREIGN GOVT.	1									1						2
FOREIGN INDIV.	2	1		3	1			1	1		1			1	2	13

AMINO ACIDS

PATENT ACTIVITY (PATENTS GRANTED 1/67-12/81) BY DATE OF PATENT APPLICATION

	NUMBER OF PATENTED APPLICATIONS															
	PRE 68	1968	1969	1970	1971	1972	1973	1974	1975	1976	1977	1978	1979	1980	1981	TOTAL
TOTAL	49	43	18	16	22	20	27	24	15	12	17	10	14	5		292
U.S. ORIGIN	16	7	1	1	2	2	6	4	2	4	3	3	3	1		55
FOREIGN ORIGIN	33	36	17	15	20	18	21	20	13	8	14	7	11	4		237
JAPAN	29	35	16	15	18	14	17	17	7	5	10	5	5	3		196
WEST GERMANY	2		1			3				1			3	1		11
FRANCE					1		2	1	1		2					7
ITALY		1						1	1	2		1				6
UNITED KINGDOM	1						1	1	1		1					5
U.S.S.R.									1			1	2			4
SWEDEN					1		1		1							3
NETHERLANDS									1		1					2
ISRAEL													1			1
CANADA						1										1
ARGENTINA	1															1
U.S. ORIGIN	16	7	1	1	2	2	6	4	2	4	3	3	3	1		55
U.S. CORP. OWNED	16	7	1	1	2	2	5	4	2	3	3	3	3	1		53
U.S. GOVT. OWNED																
U.S. INDIV. OWNED										1						1
FOREIGN OWNED							1									1
FOREIGN ORIGIN	33	36	17	15	20	18	21	20	13	8	14	7	11	4		237
U.S. OWNED	1	1				1						2				5
FOREIGN OWNED	32	35	17	15	20	17	21	20	13	8	14	5	11	4		232
FOREIGN CORP.	27	34	17	14	20	15	21	19	12	8	14	4	9	4		218
FOREIGN GOVT.	1							1								2
FOREIGN INDIV.	4	1		1		2			1			1	2			12

AMINO ACIDS

Organizational Patenting: Ranked

NO. OF PATENTS	ASSIGNEES WITH 2 OR MORE PATENTS (1969-1981)
64	KYOWA HAKKO KOGYO CO., LTD.
57	AJINOMOTO CO., INC.
13	TANABE SEIYAKU CO., LTD.
9	KANEGAFUCHI KAGAKU KOGYO KABUSHIKI KAISHA
7	HOFFMAN-LA ROCHE INC.
7	TAKEDA CHEMICAL INDUSTRIES LTD.
5	COMMERCIAL SOLVENTS CORP.
4	SNAM PROGETTI S.P.A.
3	IMPERIAL CHEMICAL INDUSTRIES LTD.
3	ASAHI KASEI KOGYO K.K.
3	AMERICAN HOME PRODUCTS CORP.
3	MERCK & CO., INC.
2	RHONE POULENC INDUSTRIES
2	AGENCE NATIONALE DE VALORISATION DE LA RECHERCHE (ANVAR)
2	PHILLIPS PETROLEUM CO.
2	ETHYL CORP.
2	TORAY INDUSTRIES, INC.
2	MITSUBISHI PETROCHEMICAL CO., LTD.
2	UPJOHN CO.
2	EXXON RESEARCH & ENGINEERING CO.
2	AKTIEBOLAGET BOFORS
2	LOUISIANA STATE UNIVERSITY FOUNDATION

ORGANIZATIONAL PATENTING (1/69-12/81) - - ALPHA LISTING

AGENCE NATIONALE DE VALORISATION DE LA RECHERCHE (ANVAR)
3940316 - PROCESS FOR THE PRODUCTION OF ORGANIC ACIDS BY BIOLOGICAL HYDROLYSIS
3956481 - HYDROSOLUBLE EXTRACTS OF MYCOBACTERIA, THEIR PREPARATION AND USE

AJINOMOTO COMPANY INCORPORATED
3463704 - METHOD OF PRODUCING ALANINE BY ENZYME ACTION
3527672 - METHOD OF PRODUCING L-LYSINE
3532600 - METHOD OF PRODUCING L-ORNITHINE AND L-ISOLEUCINE BY FERMENTATION
3532601 - FERMENTATIVE PREPARATION OF THREONINE
3533914 - METHOD OF PRODUCING L-GLUTAMIC ACID BY FERMENTATION
3546070 - FERMENTATIVE METHOD OF PRODUCING L-SERINE FROM DL-SERINE
3551292 - PROCESS OF PRODUCING L-GLUTAMIC ACID BY FERMENTATION
3580810 - FERMENTATIVE PRODUCTION OF L-THREONINE
3582471 - METHOD OF PRODUCING THREONINE BY FERMENTATION
3616218 - METHOD OF PRODUCING L-LYSINE
3616224 - PRODUCTION OF AMINO ACIDS BY FERMENTATION
3623952 - METHOD OF PREDUCING L-SERINE BY FERMENTATION
3660235 - METHOD FOR PRODUCING PHENYLALANINE BY FERMENTATION
3663370 - PROCESS FOR PRODUCING L-GLUTAMIC ACID BY FERMENTATION
3674639 - METHOD OF PRODUCING L-GLUTAMIC ACID BY FERMENTATION
3700559 - METHOD OF PRODUCING TRYPTOPHAN BY FERMENTATION
3704205 - METHOD OF PRODUCING L-GLUTAMIC ACID BY FERMENTATION
3707441 - METHOD OF PRODUCING L-LYSINE BY FERMENTATION
3709785 - METHOD OF PRODUCING L-TYROSINE BY FERMENTATION
3716453 - METHOD OF PRODUCING L-HISTIDINE BY FERMENTATION
3723249 - METHOD OF PRODUCING L-ARGININE BY MICROORGANISM
3767529 - METHOD OF PRODUCING L-ISOLEUCINE BY FERMENTATION
3784446 - METHOD OF PRODUCING L-GLUTAMIC ACID BY FERMENTATION OF AROMATIC ORGANIC COMPOUNDS
3791924 - BIOLOGICAL METHOD OF PRODUCING PHENOLIC AMINO ACIDS
3801456 - METHOD FOR PRODUCING L-ARGININE BY FERMENTATION
3808101 - BIOLOGICAL METHOD OF PRODUCING TRYPTOPHAN AND 5-SUBSTITUTED TRYPTOPHANS
3819483 - METHOD OF PRODUCING L-PROLINE BY FERMENTATION
3825472 - METHOD OF PRODUCING L-LYSINE BY FERMENTATION
3833473 - METHOD FOR PRODUCING L-ARGININE BY FERMENTATION
3841966 - METHOD OF PREPARING AN OPTICALLY ACTIVE AMINO ACID FOR A SALT OF AN ACYL DERIVATIVE THEREOF IN THE RACEMIC FORM
3843441 - METHOD OF PRODUCING L-SERINE BY FERMENTATION
3865690 - FERMENTATIVE PRODUCTION OF L-LEUCINE
3871958 - BIOLOGICAL METHOD OF PRODUCING SERINE AND SERINOL DERIVATIVES
3871960 - METHOD OF PRODUCING L-LYSINE BY FERMENTATION
3875001 - FERMENTATIVE PRODUCTION OF L-HISTIDINE
3878044 - METHOD OF PRODUCING L-ARGININE BY FERMENTATION
3880718 - METHOD FOR LIMITING DAMAGE DUE TO BACTERIOPHAGES IN FERMENTATION MEDIA
3880741 - METHOD OF PRODUCING L-SERINE
3886039 - METHOD FOR PRODUCING L-GLUTAMINE
3893888 - FERMENTATIVE PRODUCTION OF L-VALINE
3907638 - SELECTIVE DEACYLATION OF N-ACYL-DL-AMINO ACIDS
3909353 - METHOD OF PRODUCING L-PHENYLALANINE BY FERMENTATION
3929571 - PROCESS FOR PREPARING L-LYSINE
3929573 - METHOD OF PREPARING L-TRYPTOPHAN
3943038 - METHOD FOR PRODUCING AMINO ACIDS BY CULTURING HYDROGEN-OXIDIZING BACTERIA
3970519 - PROCESS FOR PRODUCING L-LEUCINE
3971701 - METHOD FOR PRODUCING L-GLUTAMIC ACID BY FERMENTATION
4000040 - METHOD FOR PRODUCING L-ASPARTIC ACID BY FERMENTATION
4006057 - METHOD OF PRODUCING L-CYSTEINE AND L-CYSTINE
4016037 - METHOD FOR PRODUCING L-AMINO ACID
4066501 - METHOD FOR PRODUCING L-LYSINE BY FERMENTATION

ORGANIZATIONAL PATENTING (1/69-12/81) - - ALPHA LISTING

AJINOMOTO COMPANY INCORPORATED (CONTINUED)
4066502 - METHOD OF PRODUCING CARBON SOURCE FOR FERMENTATION
4071405 - METHOD OF PRODUCING SULFUR CONTAINING L-AMINO ACIDS
4184918 - METHOD FOR PRODUCING 4-FORMYL-2-AMINO-BUTYRIC ACID (GLUTAMIC SEMIALDEHYDE)
4211840 - METHOD FOR PRODUCING D-+60 -AMINO ACID
4224409 - METHOD FOR PRODUCING L-PROLINE BY FERMENTATION
4275157 - METHOD FOR THE PRODUCTION OF L-LYSINE

AKTIEBOLAGET BOFORS
3915796 - FERMENTATIVE PREPARATION OF TRYPTOPHAN DERIVATIVES
3963572 - FERMENTATIVE PROCESS FOR THE PRODUCTION OF L-TRYPTOPHAN AND ITS DERIVATIVES

AMERICAN CYANAMID COMPANY
4197245 - 1-HYDROXYMETHYL-1-OXO-PROSTANE DERIVATIVES OF THE A+HD 1 +B SERIES

AMERICAN HOME PRODUCTS CORPORATION
3455783 - CONTROL OF ENZYME ACTIVITY IN NONFLUID GELS
3455784 - CONTROL OF ENZYME ACTIVITY IN FROZEN SYSTEMS
3488258 - METHOD OF RESOLVING RACEMIC STEROIDS

ASAHI KASEI KOGYO KABUSHIKI KAISHA
3616214 - CULTURE OF MICROORGANISMS ON HYDROCARBONS
3730837 - PROCESS FOR PRODUCING YEAST WITH INCREASED METHIONINE CONTENT
3915795 - PROCESS FOR PRODUCING L-5-METHOXYTRYPTOPHAN USING MICROORGANISMS

ASTRA LAKEMEDEL AKTIEBOLAG
3838008 - STEREOSELECTIVE PREPARATION OF L-DOPA AND L-M-TYROSINE AND NOVEL COMPOUNDS

BAXTER TRAVENOL LABORATORIES, INC.
4288538 - TEST METHOD AND COMPOSITION THEREFOR

BAYER AKTIENGESELLSCHAFT
4260684 - STEREOSELECTIVE RESOLUTION OF PHENYLGLYCINE DERIVATIVES AND 4-HYDROXYPHENYLGLYCINE DERIVATIVES WITH ENZYME RESINS

BECKMAN INSTRUMENTS INC.
4205183 - FACILE METHOD FOR ISOLATING RESOLVED AMINO ACIDS

BOEHRINGER INGELHEIM, GMBH
3855062 - PROCESS FOR PREPARATION OF DERIVATIVES OF L-TYROSINE

BOEHRINGER MANNHEIM G.M.B.H.
3639211 - PROCESS FOR THE PREPARATION OF CREATINE PHOSPHATE

BRISTOL-MYERS COMPANY
3823069 - PREPARATION OF L(-)-GAMMA-AMINO-ALPHA-HYDROXYBUTYRIC ACID

CANADIAN PATENTS AND DEVELOPMENT LIMITED
3813317 - RESOLUTION OF RACEMATES OF RING-SUBSTITUTED PHENYLALANINES

CHUGAI SEIYAKU KABUSHIKI KAISHA
3668072 - FERMENTATION PROCESS FOR THE PRODUCTION OF L-ORNITHINE

COMMERCIAL SOLVENTS CORPORATION
3428525 - PRODUCTION OF O-CARBAMYL-D-SERINE
3429776 - PROCESS FOR THE PRODUCTION OF GLUTAMIC ACID
3451891 - PROCESS FOR THE PRODUCTION OF GLUTAMIC ACID

ORGANIZATIONAL PATENTING (1/69-12/81) - - ALPHA LISTING

(CONTINUED)

COMMERCIAL SOLVENTS CORPORATION
3627637 - PRODUCTION OF ORGANIC NITROGENOUS MATERIALS
3929575 - METHOD OF PRODUCING GLUTAMIC ACID BY FERMENTATION

COULTER ELECTRONICS INC.
4087331 - COLORIMETRIC METHOD FOR DETERMINING GAMMA-GLUTAMYL TRANSPEPTIDASE AND COMPOSITIONS USEFUL THEREIN

CPC INTERNATIONAL INC.
4276379 - PREPARATION OF HIGH FRUCTOSE SYRUPS FROM SUCROSE

CROWN ZELLERBACH CORPORATION
3558434 - STIMULATION OF THE GROWTH OF MICROORGANISMS

DEGUSSA AKTIENGESELLSCHAFT
4304858 - PROCESS FOR THE CONTINUOUS ENZYMATIC CHANGE OF WATER SOLUBLE +60 -KETOCARBOXYLIC ACIDS INTO THE CORRESPONDING AMINO ACID S

DENKI KAGAKU KOGYO KABUSHIKI KAISHA
3915797 - IMMOBILIZED ENZYMES

DYNAMIT NOBEL AKTIENGESELLSCHAFT
4271269 - REGENERATION OF AN ENZYME IMMOBILIZATE

EISAI CO., LTD.
4022664 - PROCESS FOR BIOCHEMICAL OPTICAL RESOLUTION OF ALPHA-TOCOPHERAL

ETHYL CORPORATION
4259441 - PROCESS FOR RESOLVING D, L-LEUCINE
4262092 - PROCESS FOR PRODUCING N-ACYL-D-PHENYLALANINE ESTER

EXXON RESEARCH + ENGINEERING CO.
3440141 - PRODUCTION OF AMINO ACIDS BY THE FERMENTATION OF C/15\-C/22\ OLEFINS
3562110 - PRODUCTION OF AMINO ACIDS

FIRMA CARL FREUDENBERG
4232123 - METHOD FOR MAKING WATER-SOLUBLE HYDROLYZATES OF KERATINACEOUS MATERIALS

GESELLSCHAFT FUR BIOTECHNOLOGISCHE FORSCHUNG MBH
4060455 - PROCESS FOR THE MICROBIAL PRODUCTION OF L-SERINE USING PSEUDOMONAS SP. DSM 672

GRUPPO LEPETIT S.P.A.
3700558 - PRODUCTION OF L-TRYPTOPHAN BY FERMENTATION

GULF RESEARCH AND DEVELOPMENT COMPANY
3713984 - CULTIVATION OF MICRO-ORGANISMS ON HYDROCARBONS

HOFFMANN-LA ROCHE INC.
3775255 - L-TRANS-2-AMINO-4-(2-AMINOETHOXY)-3-BUTENOIC ACID
3859171 - L-2-AMINO-4-M ETHOXY-TRANS-3-BUTENOIC ACID
3865694 - FERMENTATIVE PREPARATION OF L-2-AMINO-4(2-AMINOETHOXY)-BUTANOIC ACID
3901880 - (S)-ALANYL-3-[ALPHA-(S)-CHLORO-3-(S)-HYDROXY-2-OXO-AZETIDINYLMETHYL]-(S)-ALANINE
4061542 - 2-METHYL-L-ARGININE PRODUCED BY CULTIVATING STREPTOMYCES STRAIN
4202943 - RESOLUTION OF A RACEMATE
4204044 - PROCESS FOR THE MANUFACTURE OF OPTICALLY ACTIVE +60 -HYDROXYCARBOXYLIC ACIDS

ORGANIZATIONAL PATENTING (1/69-12/81) - - ALPHA LISTING

IMPERIAL CHEMICAL INDUSTRIES LIMITED
3892629 - PROCESS FOR GROWING A FUNGUS
4035485 - POLYPEPTIDES
4183787 - CIRCULATION OF GAS/LIQUID MIXTURES

INSTITUTE OF GAS TECHNOLOGY
3649459 - MICROBIOLOGICAL OXIDATION OF HYDROCARBONS

INSTITUT FRANCAIS DU PETROLE
3986933 - METHOD OF PREPARING YEASTS ENRICHED IN L-LYSINE AND CAPABLE OF EXCRETING ORGANIC ACIDS

KANEGAFUCHI KAGAKU KOGYO KABUSHIKI KAISHA
3759789 - PROCESS FOR THE MICROBIAL PRODUCTION OF LYSINE AND ISOLEUSINE
3888737 - PROCESS OF PRODUCING L-LYSINE USING MIXED MICROORGANISMS
3905866 - PROCESS FOR PRODUCTION OF L-LYSINE BY FERMENTATION
3920520 - FERMENTATION PROCESS FOR PRODUCING OPTICALLY ACTIVE L-LYSINE
4094741 - PROCESS FOR PREPARING D-(-)-N-CARBAMOYL-2-(PHENYL OR SUBSTITUTED PHENYL)GLYCINES
4123329 - PROCESS FOR PRODUCING L-LYSINE BY FERMENTATION
4148688 - PROCESS FOR PREPARING L-METHIONINE
4237227 - PROCESS FOR PREPARING D-N-CARBAMOYL-+60 -AMINO ACIDS
4242452 - PROCESS FOR PREPARING N-CARBAMOYL-D-THIENYLGLYCINES

KIKKOMAN SHOYU CO., LTD.
3912822 - PROCESS FOR PRODUCING A PROTEIN HYDROLYSATE

KYOWA HAKKO KOGYO CO., LTD
3420744 - PROCESS FOR PRODUCING L-GLUTAMINE
3436308 - PROCESS FOR PRODUCING L-GLUTAMIC ACID
3450599 - PROCESS FOR PRODUCING L-GLUTAMIC ACID AND ALPHA- KETOGLUTARIC ACID
3494830 - PROCESS FOR PRODUCING L-THREONINE
3494831 - PROCESS FOR PRODUCING L-LYSINE FROM 5-(4-AMINOBUTYL) -HYDANTOIN
3511752 - METHOD FOR PRODUCING L-GLUTAMIC ACID
3523801 - PROCESS FOR THE PREPARATION OF SEASONINGS
3531372 - PROCESS OF PRODUCING DIAMINOPIMELIC ACID
3574061 - PROCESS FOR PREPARING L-ORNITHINE BY FERMENTATION
3591456 - PROCESS FOR PRODUCING L-TRYPTOPHAN
3594279 - PROCESS FOR PRODUCING L-TRYPTOPHAN
3595751 - PROCESS FOR PRODUCING L-LYSINE
3598701 - PROCESS FOR PRODUCING L-HOMOSERINE
3616210 - PROCESS FOR PRODUCING L-GLUTAMIC ACID
3622453 - PROCESS FOR PRODUCING L-THREONINE
3630843 - PROCESS FOR TREATING A HYDROCARBON FERMENTATION LIQUOR
3639210 - FERMENTATION PROCESSES UTILIZING GASEOUS HYDROCARBONS
3642576 - PROCESS FOR PRODUCING L-GLUTAMIC ACID AND ALPHA-KETOGLUTARIC ACID
3642579 - PROCESS FOR PRODUCING L-PROLINE
3647628 - PROCESS FOR PRODUCING L-THREONINE
3650899 - PROCESS FOR PRODUCING L-PROLINE
3654079 - PROCESS FOR PRODUCING L-PHENYLALANINE BY FERMENTATION
3655510 - PROCESS FOR PREPARING AMINO ACIDS FROM HYDROCARBONS
3668073 - PREPARATION OF L-LEUCINE BY FERMENTATION
3671396 - PREPARATION OF L-ISOLEUCINE BY FERMENTATION
3676301 - PROCESS FOR PREPARING L-HISTIDINE
3684653 - PROCESS FOR PRODUCING L-THREONINE
3684654 - PROCESS FOR PRODUCING L-THREONINE
3684655 - PROCESS FOR PRODUCING N-ACETYLGUTAMINE
3687809 - PROCESS FOR PRODUCING L-LYSINE FROM L-ASPARTIC ACID

ORGANIZATIONAL PATENTING (1/69-12/81) - - ALPHA LISTING

KYOWA HAKKO KOGYO CO., LTD (CONTINUED)
3687810 - PROCESS FOR PRODUCING L-LYSINE BY FERMENTATION
3689360 - PROCESS FOR PRODUCING ALPHA-(N-ACETYL)-L-ORNITHINE
3692628 - PROCESS FOR PRODUCING L-SERINE
3698997 - PREPARATION OF L-TYROSINE BY FERMENTATION
3700556 - PROCESS FOR PRODUCING L-VALINE
3700557 - PROCESS FOR PRODUCING L-LYSINE BY FERMENTATION
3708395 - PROCESS FOR PRODUCING L-LYSINE
3711373 - PROCESS FOR PRODUCING L-GLUTAMIC ACID
3711374 - PROCESS FOR PRODUCING L-LYSINE BY FERMENTATION IN THE PRESENCE OF HYDROCARBONS
3711375 - PROCESS FOR PRODUCING L-THREONINE
3713977 - PROCESS FOR PRODUCING L-HISTIDINE
3719561 - PROCESS FOR PRODUCING DIAMINOPIMELIC ACID
3729381 - PROCESS FOR PRODUCING 1-METHIONINE
3732144 - PROCESS FOR PRODUCING L-THREONINE AND L-LYSINE
3755081 - PROCESS FOR PREPARING L-SERINE
3759790 - PROCESS FOR PREPARING L-PHENYLALANINE
3764473 - PROCESS FOR PRODUCING L-GLUTAMIC ACID
3787287 - PROCESS FOR THE PRODUCTION OF L-TYROSINE
3791925 - PROCESS FOR PRODUCING L-HISTIDINE
3795583 - PROCESS FOR PREPARING L-SERINE
3816258 - PROCESS FOR PRODUCING L-HISTIDINE BY FERMENTATION
3839151 - PROCESS FOR PRODUCING L-LYSINE BY FERMENTATION
3849250 - PROCESS FOR PRODUCING L-ARGININE BY FERMENTATION
3849251 - PROCESS FOR PRODUCING L-TRYPTOPHAN
3907637 - PROCESS FOR THE PRODUCTION OF L-LYSINE
3907641 - PROCESS FOR PRODUCING AMINO ACIDS BY FERMENTATION
3917511 - PROCESS FOR PREPARING L-PHENYLALANINE
3939042 - PROCESS FOR THE PRODUCTION OF L-GLUTAMIC ACID
3959075 - PROCESS FOR THE PRODUCTION OF L-LYSINE
4086137 - PROCESS FOR THE PRODUCTION OF L-ARGININE BY FERMENTATION
4169763 - PROCESS FOR THE PRODUCTION OF L-LYSINE BY FERMENTATION
4183786 - PROCESS FOR PRODUCTION OF L-SERINE
4302540 - PROCESS OF PRODUCING OPTICALLY ACTIVE CEPHALOSPORIN ANALOGS BY ENZYME SELECTIVE DEACYLATION
4302541 - PROCESS OF PRODUCING OPTICALLY ACTIVE CEPHALOSPORIN ANALOGS BY ENZYME SELECTIVE DEACYLATION

LES PRODUITS ORGANIQUES DU SANTERRE ORSAN
3933586 - METHOD OF MAKING L-ASPARTIC ACID FROM FUMARIC ACID

LIQUICHIMICA S.P.A.
4013508 - PROCESS FOR THE PRODUCTION OF 1-ASPARTIC ACID BY FERMENTATION OF HYDROCARBONS

LOUISIANA STATE UNIVERSITY FOUNDATION
4278766 - MUTANT MICROORGANISMS USEFUL FOR THE PRODUCTION OF SINGLE CELL PROTEIN AND AMINO ACIDS

LOUISIANA STATE UNIVERSITY FOUNDATION
4104124 - PROCESS FOR THE PRODUCTION OF SINGLE CELL PROTEIN AND AMINO ACIDS

MEIJI SEIKA KAISHA LTD.
4226941 - PROCESS FOR THE OPTICAL RESOLUTION OF D,L-2-AMINO-4-METHYLPHOSPHINOBUTYRIC ACID

MERCK + CO., INC.
3524797 - LYSINE PRODUCTION
3635795 - ENZYMATIC RESOLUTION OF RACEMIC (CIS-1,2-EPOXYPROPYL) PHOSPHONIC ACID COMPOUNDS
3929576 - PRODUCING 3-FLUORO-D-ALANINE

ORGANIZATIONAL PATENTING (1/69-12/81) - - ALPHA LISTING

MITSUBISHI CHEMICAL INDUSTRIES LTD.
3974031 - PROCESS FOR PRODUCING L-CYSTEINE OR ITS DERIVATIVES

MITSUBISHI GAS-CHEMICAL COMPANY, INC.
4092220 - PROCESS FOR MANUFACTURE OF L(+)-TARTARIC ACID OR SALTS THEREOF

MITSUBISHI PETROCHEMICAL CO., LTD.
4271267 - PREPARATION OF L-TRYTOPHAN BY FERMENTATION
4276380 - PRODUCTION OF L-AMINO ACIDS

MITSUI TOATSU CHEMICALS INC.
3905867 - METHOD OF PRODUCING L-LYSINE BY FERMENTATION

MOBIL OIL CORPORATION
3756916 - METHOD OF ISOLATING AMINO ACID PRODUCING MUTANT MICROORGANISMS AND MUTANTS OBTAINED THEREFROM

MONSANTO COMPANY
3649457 - ENZYMATIC PROCESSING WITH POLYMER-ENZYME PRODUCT

NALCO CHEMICAL COMPANY
3591455 - CONTINUOUS MICROBIAL PROCESS

NISSHIN FLOUR MILLING CO., LTD.
3767528 - PROCESS FOR THE MANUFACTURE OF 3,4-DISUBSTITUTED PHENYL-1-ALANINES

NODA INSTITUTE FOR SCIENTIFIC RESEARCH
3502544 - PROCESS FOR PRODUCING L-ISOLEUCINE BY FERMENTATION

NOVO INDUSTRI A/S
4080259 - PROCESS OF PREPARING L AND D ALPHA-AMINO ACIDS BY ENZYME TREATMENT OF DL-ALPHA-AMINO ACID AMIDE

OWENS-ILLINOIS INC.
3812009 - STEREOSPECIFIC PROCESS FOR THE PREPARATION OF L-3,4-DIHYDROXY-PHENYLALANINE (L-DOPA) AND ANALOGS THEREOF

PARKE DAVIS + COMPANY
3669837 - PROCESS FOR PRODUCING 3-(3,4-DIMETHOXYPHENYL)-L-ALARINE BY ENZYMATIC RESOLUTION

PHILLIPS PETROLEUM COMPANY
3642578 - MICROBIAL SYNTHESIS FROM ALDEHYDE CONTAINING HYDROCARBON DERIVED PRODUCTS
3856774 - MICROBIAL SYNTHESIS FROM ALDEHYDE CONTAINING HYDROCARBON DERIVED PRODUCTS

PROCTER + GAMBLE COMPANY
3963573 - PROCESS FOR PRODUCING N-ACYL-L-METHIONINE

RESEARCH PRODUCTS REHOVOT LTD.
4251631 - CROSS-LINKED ENZYME MEMBRANE

RESEARCH TRIANGLE INSTITUTE
4087328 - PURIFICATION AND IMMOBILIZATION OF SULFHYDRYL OXIDASE

RHONE POULENC INDUSTRIES
4132596 - SUPPORT-AMINOACYLASE COMPLEXES
4189349 - +60 ,+67 -DIAMINOACID AND ITS LACTAM

RHONE-POULENC S.A.
3703439 - PROCESS FOR THE PREPARATION OF L-BETA-(3, 4-DIHYDROXYPHENYL)-ALPHA-ALANINE BY FERMENTATION

ORGANIZATIONAL PATENTING (1/69-12/81) - - ALPHA LISTING

SANRAKU-OCEAN CO., LTD.
3563857 - PROCESS FOR PRODUCING L-GLUTAMIC ACID BY FERMENTATION

SCHERING AKTIENGESELLSCHAFT
3830696 - PROCESS FOR THE PREPARATION OF 5-HYDROXY-L-TRYPTOPHAN

SCHERING CORPORATION
4232006 - ANTIBIOTIC W-10 COMPLEX, ANTIBIOTIC 20561 AND ANTIBIOTIC 20562 AS ANTIFUNGAL AGENTS

SMITHKLINE CORPORATION
4293546 - ANTHRACYCLINE ANTIBIOTICS PRODUCED BY +I STREPTOSPORANGIUM FRAGILIS +B SHEARER SP. NOV. ATCC 31519

SNAM PROGETTI S.P.A.
3964970 - PROCESS FOR THE PREPARATION OF L-CAR-BAMYL-AMINO ACIDS AND OF THE CORRESPONDING L-AMINO ACIDS
4065353 - METHOD FOR THE PREPARATION OF D-CARBAMYL AMINOACIDS AND THE CORRESPONDING D-AMINOACIDS
4111749 - METHOD OF CONVERTING RACEMIC HYDANTOINS INTO OPTICALLY ACTIVE AMINOACIDS
4248967 - ENZYMIC COMPLEXES ADAPTED TO CONVERT RACEMIC HYDANTOINS INTO OPTICALLY ACTIVE AMINOACIDS, AND THEIR APPLICATIONS

SOUTHERN ILLINOIS UNIVERSITY FOUNDATION
3878043 - METHOD FOR PREPARING L-DOPA AND NOVELS COMPOUNDS USEFUL THEREIN

STAMICARBON B.V.
3971700 - PROCESS FOR THE ENZYMATIC RESOLUTION OF DL-PHENYL GLYCINE AMIDE INTO ITS OPTICALLY ACTIVE ANTIPODES

SUMITOMO CHEMICAL COMPANY, LIMITED
4108723 - METHOD FOR OPTICAL RESOLUTION OF DL-LYSINE COMPOUNDS

TAKASAGO PERFUMERY COMPANY LIMITED
3607651 - METHOD FOR THE BIOCHEMICAL ISOLATION OF ALPHA-MENTHOL

TAKEDA CHEMICAL INDUSTRIES LTD.
3494942 - TOTAL SYNTHESIS OF 13-HYDROCARBON- SUBSTITUTED GONAPOLYENES
3600279 - METHOD FOR PRODUCING D-PANTOIC ACID
3623951 - METHOD FOR PRODUCING L-GLUTAMIC ACID
3654078 - METHOD FOR PRODUCING L-GLUTAMIC ACID
3709787 - PRODUCING L-GLUTAMIC ACID
3801457 - METHOD FOR PRODUCING L-TRYPTOPHAN
4011135 - PRODUCTION OF L(+)-TARTARIC ACID

TANABE SEIYAKU CO. LTD.
3458400 - PROCESS FOR PRODUCING L-ALANINE
3730838 - ENZYMATIC PREPARATION OF L-CITRULLINE
3734829 - FERMENTATIVE PREPARATION OF L-ARGININE
3791926 - PROCESS FOR THE PRODUCTION OF L-ASPARTIC ACID
3816254 - OPTICAL RESOLUTION OF RACEMIC AMINO ACIDS
3841968 - FERMENTATIVE PREPARATION OF L-ISOLEUCINE
3871959 - FERMENTATIVE PRODUCTION OF D-ALANINE
3886040 - NOVEL PROCESS FOR PREPARING L-CITRULLINE
3898128 - PROCESS FOR PREPARING L-ALANINE
3902966 - FERMENTATIVE PREPARATION OF L-HISTIDINE
3902967 - PROCESS FOR PRODUCING L-ARGININE BY FERMENTATION
4090919 - WATER-INSOLUBLE TANNIN PREPARATION FOR IMMOBILIZATION OF PROTEINS
4224411 - IMMOBILIZED AMINOACYLASE

TORAY INDUSTRIES INC.
3770585 - PROCESS FOR PREPARING 1-LYSINE

ORGANIZATIONAL PATENTING (1/69-12/81) - - ALPHA LISTING

(CONTINUED)

TORAY INDUSTRIES INC.
3796632 - PROCESS FOR RACEMIZING ALPHA-AMINO-EPSILON-CAPROLACTAM

UNIVERSITY OF CALIFORNIA, THE REGENTS OF
3817830 - METHOD FOR OBTAINING OPTICALLY ACTIVE COMPOSITION FROM RACEMATE OF VANILLYLMANDELIC ACID

UNIVERSITY OF EDINBURGH
3875004 - ENZYMATIC PROCESS FOR PRODUCING PROSTAGLANDINS C

UPJOHN COMPANY
3753859 - MICROBIOLOGICAL PROCESS FOR PREPARING THE AMINO ACIDS TRANS-4-N PROPYL-L-PROLINE AND TRANS-4-ETHYL-L-PROLINE
4029548 - PROCESS FOR PRODUCING ANTIBIOTICS U-50,147 AND U-51,738

WISCONSIN ALUMNI RESEARCH FOUNDATION
3671397 - METHOD FOR PREPARING L-DOPA

ZAIDAN HOJIN BISEIBUTSU KAGAKU KENKYU KAI
4029547 - BIOLOGICALLY ACTIVE SUBSTANCE, BESTATIN, AND PRODUCTION THEREOF

INVENTORS OF INDIVIDUALLY OWNED PATENTS (1/75-12/81) (ALPHA LISTING)

INVENTOR NAME			STREET	CITY	ST	ZIP/CNTRY
BALITSKAYA	ROZA	MITROFANO	ULITSA VYBORGSKAYA, 4, KV. 6	MOSCOW		SU
4054489 - METHOD OF PREPARING L-GLUTAMIC ACID AND ITS SODIUM SALT						
BEKER	MARTIN	E.	ZVEYAS, 4	RIGA		SU
4286060 - PROCESS FOR PRODUCTION OF AN AMINO ACID						
BUKIN	VASILY	N.	LENINSKY PROSPEKT, 13, KORPUS	MOSCOW		SU
4286060 - PROCESS FOR PRODUCTION OF AN AMINO ACID						
CHARLES	MARVIN		622 N. 29 ST.	ALLENTOWN	PA	18104
4048018 - METHOD OF CARRYING OUT ENZYME CATALYZED REACTIONS						
COUGHLIN	ROBERT	W.	902 SEVENTH AVE.	BETHLEHEM	PA	18018
4048018 - METHOD OF CARRYING OUT ENZYME CATALYZED REACTIONS						
DEBABOV	VLADIMIR	G.	ULITSA MIKLUKHO-MAKLAYA, 43, K	MOSCOW		SU
4278765 - METHOD FOR PREPARING STRAINS WHICH PRODUCE AMINOACIDS						
DMITRENKO	LEONID	V.	PROSPEKT MORISA TOREZA, 9, KV.	LENINGRAD		SU
4286060 - PROCESS FOR PRODUCTION OF AN AMINO ACID						
ENGELBART	FRITZ		HANNOVERSCHE STR. 62	ANDERTEN UB. HANNOVE		DT
3880716 - PROCESS FOR MAKING OPTIMUM CHEMICAL CONVERSIONS AND BIOLOGICAL FERMENTATIONS						
ENGELBART	WILKE		WARDENBURGSTR. 40	OLDENBURG		DT
3880716 - PROCESS FOR MAKING OPTIMUM CHEMICAL CONVERSIONS AND BIOLOGICAL FERMENTATIONS						
EVSTJUGOV-BABAEV	LEV	MIKHAILOV	ULITSA PUSHKINA, 22, KV. 36	MOSCOW		SU
4054489 - METHOD OF PREPARING L-GLUTAMIC ACID AND ITS SODIUM SALT						
GLUSCHENKO	NINA	V.	GRAZHDANSKY PROSPEKT, 31, KORP	LENINGRAD		SU
4286060 - PROCESS FOR PRODUCTION OF AN AMINO ACID						
KASATKINA	TATYANA	BORISOVNA	PROSPEKT MIRA, 120, KV. 226	MOSCOW		SU
4054489 - METHOD OF PREPARING L-GLUTAMIC ACID AND ITS SODIUM SALT						
KHURGES	EVGENY	M.	ULITSA TIKHVINSKAYA, 1/13, KV.	MOSCOW		SU
4278765 - METHOD FOR PREPARING STRAINS WHICH PRODUCE AMINOACIDS						
KOZLOV	JURY	I.	MIKRORAION 2, KORPUS 3, KV. 17	MOSCOW		SU
4278765 - METHOD FOR PREPARING STRAINS WHICH PRODUCE AMINOACIDS						
KOZYREVA	LJUDMILA	F.	4 NOVOPODMOSKOVNY PEREULOK, 4,	MOSCOW		SU
4237228 - METHOD OF PRODUCING L-ISOLEUCINE USING +I BREVIBACTERIUM FLAVUM						
KUTSEVA	LIDIA	S.	MOSKOVSKAYA OBLAST, ULITSA SVO	MALAKHOVKA		SU
4286060 - PROCESS FOR PRODUCTION OF AN AMINO ACID						
KUZMINA	MARIYA	A.	LENINGRADSKAYA OBLAST, ULITSA	SESTRORETSK		SU
4286060 - PROCESS FOR PRODUCTION OF AN AMINO ACID						
KUZNETSOVA	NATALYA	NIKOLAEVN	ULITSA DNEPROPETROVSKAYA, 23,	MOSCOW		SU
4054489 - METHOD OF PREPARING L-GLUTAMIC ACID AND ITS SODIUM SALT						

INVENTORS OF INDIVIDUALLY OWNED PATENTS (1/75-12/81) (ALPHA LISTING)

INVENTOR NAME			STREET	CITY	ST	ZIP/CNTRY
LEONOVA	TATYANA	V.	ULITSA SVOBODY, 81, KORPUS 5,	MOSCOW		SU
4237228 - METHOD OF PRODUCING L-ISOLEUCINE USING +I BREVIBACTERIUM FLAVUM						
ROZINOV	MIKHAIL	N.	3 FRUNZENSKAYA ULITSA, 6, KV.	MOSCOW		SU
4278765 - METHOD FOR PREPARING STRAINS WHICH PRODUCE AMINOACIDS						
SHAKULOV	RUSTEM	S.	ULITSA KRASNOGO MAYAKA, 14, KO	MOSCOW		SU
4278765 - METHOD FOR PREPARING STRAINS WHICH PRODUCE AMINOACIDS						
SHOLIN	ALBERT	FEDOROVIC	TEPLY STAN, 1A MIKRORAION, KOR	MOSCOW		SU
4054489 - METHOD OF PREPARING L-GLUTAMIC ACID AND ITS SODIUM SALT						
UTENKOVA	VARVARA	A.	ULITSA MATROSA ZHELEZNYAKA, 51	LENINGRAD		SU
4286060 - PROCESS FOR PRODUCTION OF AN AMINO ACID						
YANKOVSKY	NIKOLAI	K.	ULITSA VERKHNAYA RADISCHEVSKAY	MOSCOW		SU
4278765 - METHOD FOR PREPARING STRAINS WHICH PRODUCE AMINOACIDS						
ZHDANOVA	NELLI	I.	LENINGRADSKOE SHOSSE, 112, KOR	MOSCOW		SU
4237228 - METHOD OF PRODUCING L-ISOLEUCINE USING +I BREVIBACTERIUM FLAVUM						
4278765 - METHOD FOR PREPARING STRAINS WHICH PRODUCE AMINOACIDS						
ZHDANOVA	NELLI	ISAAKOVNA	LENINGRADSKOE SHOSSE, 112/1, K	MOSCOW		SU
4054489 - METHOD OF PREPARING L-GLUTAMIC ACID AND ITS SODIUM SALT						

PATENTS (1/63-12/81) WITH NEITHER ASSIGNMENT NOR INVENTOR INFORMATION IN THE DATA BASE

3498883 - PROCESS FOR THE PRODUCTION OF L-GLUTAMIC ACID
3516349 - PROTEIN HYDROLYSIS
3527671 - PROCEDURE FOR THE SEPARATION OF ISOTOPE- CONTAINING AMINO ACID RACMATES INTO THEIR OPTICAL D-AND L-ANTIPODES
3616217 - PROCESS FOR PREPARING L-THREONINE
3816255 - PROCESS FOR PRODUCING L-LYSINE BY FERMENTATION

3408257	3080297	3086916	3086918	3087863	3096252	3099604	3112341	3117062	3117915	3120472	3121668
3123536	3123537	3124590	3127327	3128237	3128305	3133868	3136702	3138540	3139386	3141831	3156627
3164531	3174908	3183170	3189526	3198712	3201323	3212994	3214345	3216906	3219543	3220929	3222258
3227625	3231478	3254001	3254002	3256156	3262861	3267005	3268412	3281247	3282794	3285827	3290225
3293141	3296090	3303210	3310475	3313709	3320135	3322646	3326773	3326775	3329577	3335065	3338793
3344038	3347752	3354047	3355359	3359178	3360554	3362885	3374150	3375173	3385762	3386888	3391059
3395080	3399114	3402104	3406095	3411990	3414478	0	0	0	0	0	0

AMINO ACIDS

FRONT PAGES OF SELECTED PATENTS

Jan-Apr 1982 U.S. Patents (4)	Selected U.S. Patents (40)	
4,309,342	4,211,840	4,262,092
4,326,029	4,016,037	4,248,967
4,312,948	3,915,795	4,132,596
4,321,325	3,963,572	4,259,441
	4,148,688	4,237,228
	4,071,405	4,061,542
	4,006,057	4,226,941
	3,963,573	4,086,137
	4,104,124	4,204,044
	4,066,502	4,080,259
	3,986,933	4,224,409
	4,054,489	3,964,970
	4,276,380	4,271,269
	4,169,763	4,242,452
	4,275,157	4,237,227
	4,108,723	4,224,411
	4,183,786	4,202,943
	4,060,455	4,251,631
	3,970,519	4,184,918
	4,260,684	3,971,701

PATENTS ARE LISTED IN ORDER OF APPEARANCE

United States Patent [19]
Chu et al.
[11] **4,309,342**
[45] **Jan. 5, 1982**

[54] **ANTIBACTERIAL PEPTIDES**

[75] Inventors: **Daniel T. Chu**, Lake Villa; **Jerry R. Martin**, Waukegan; **Alford M. Thomas**, Wadsworth, all of Ill.

[73] Assignee: **Abbott Laboratories**, North Chicago, Ill.

[21] Appl. No.: **165,583**

[22] Filed: **Jul. 3, 1980**

[51] **Int. Cl.**[3] **C07C 103/52**; A61K 31/42; A61K 31/195; C12P 13/06

[52] **U.S. Cl.** ..... **260/112.5 R**; 424/272; 424/319; 435/116

[58] **Field of Search** ..... 424/272, 319; 435/116; 260/112.5 R

[56] **References Cited**

U.S. PATENT DOCUMENTS

3,929,576	12/1975	Reinhold	435/116
3,956,367	5/1976	Kollonitsch	424/319
4,031,231	6/1977	Kahan	424/272
4,119,620	10/1978	Nagatsu et al.	260/112.5 R
4,176,116	11/1979	Hassall et al.	260/112.5 R
4,187,216	2/1980	Hassall et al.	260/112.5 R

FOREIGN PATENT DOCUMENTS

270399	11/1963	Australia	424/177
269188	1/1965	Australia	424/177
272332	4/1965	Australia	424/177

OTHER PUBLICATIONS

Pettit, Synthetic Peptides, vol. I, 81–82.
Pettit, Synthetic Peptides, vol. 5, 136.
Chem. Abstr., vol. 79, 1973, p. 115887t.
Chem. Abstr., vol. 83, 1975, p. 84873m.
Chem. Abstr., 84, 1974, p. 106072z.

Primary Examiner—Delbert R. Phillips
Attorney, Agent, or Firm—Robert L. Niblack; Paul D. Burgauer

[57] **ABSTRACT**

It has been found that dipeptides containing a 3-fluoro-D-alanine N-terminus are powerful antibacterials and produce a highly useful synergistic effect with antibiotics.

8 Claims, No Drawings

United States Patent [19]
Olivieri et al.
[11] **4,312,948**
[45] **Jan. 26, 1982**

[54] **ENZYMIC MICROBIOLOGICAL PROCESS FOR PRODUCING OPTICALLY ACTIVE AMINOACIDS STARTING FROM HYDANTOINS AND/OR RACEMIC CARBAMOYL DERIVATIVES**

[75] Inventors: **Roberto Olivieri**, Mentana; **Aurelio Viglia**, Monterotondo; **Ludwig Degen**, Rome; **Leonello Angelini**, Monterotondo; **Eugenio Fascetti**, Rome, all of Italy

[73] Assignee: **Snamprogetti S.p.A.**, Milan, Italy

[21] Appl. No.: **38,232**

[22] Filed: **May 11, 1979**

[30] **Foreign Application Priority Data**

May 23, 1978 [IT] Italy 23679 A/78

[51] **Int. Cl.**[3] **C12N 1/20**; C07B 19/02

[52] **U.S. Cl.** **435/253**; 435/106; 435/280; 435/822

[58] **Field of Search** 435/280, 106–108, 435/253

[56] **References Cited**

U.S. PATENT DOCUMENTS

4,065,353	12/1977	Cecere et al.	435/280X
4,094,741	6/1978	Yamada et al.	435/280
4,111,749	9/1978	Degen et al.	435/280
4,204,044	5/1980	Suhara et al.	435/280
4,211,840	7/1980	Nakamori et al.	435/107

Primary Examiner—Lionel M. Shapiro
Attorney, Agent, or Firm—Morgan, Finnegan, Pine, Foley & Lee

[57] **ABSTRACT**

A method is disclosed for producing D-aminoacids from racemic mixtures of N-carbamoyl derivatives of such acids or from the corresponding hydantoins wherein the racemic compounds are subjected to the enzymic and microbiological action of an enzymic complex prepared from microorganisms of the Agrobacterium genus, more particularly the NRRL B 11291 strain.

6 Claims, No Drawings

United States Patent [19]
Yukawa et al.
[11] **4,326,029**
[45] **Apr. 20, 1982**

[54] **PROCESS FOR PRODUCTION OF L-ASPARTIC ACID**

[75] Inventors: **Hideaki Yukawa**; **Terukazu Nara**; **Yoshihiro Takayama**, all of Ibaraki, Japan

[73] Assignee: **Mitsubishi Petrochemical Co., Ltd.**, Tokyo, Japan

[21] Appl. No.: **177,044**

[22] Filed: **Aug. 11, 1980**

[30] **Foreign Application Priority Data**

Aug. 10, 1979 [JP] Japan 54/101820

[51] **Int. Cl.**[3] **C12P 13/20**

[52] **U.S. Cl.** **435/109**; 435/172; 435/232; 435/840

[58] **Field of Search** 435/109, 172, 116, 232

[56] **References Cited**

U.S. PATENT DOCUMENTS

3,907,641	9/1975	Nakayama et al.	435/116 X
3,970,519	7/1976	Tsuchida et al.	435/116
4,000,040	12/1976	Tsuchida et al.	435/109

Primary Examiner—Lionel M. Shapiro
Attorney, Agent, or Firm—Sughrue, Mion, Zinn, Macpeak and Seas

[57] **ABSTRACT**

A process for producing L-aspartic acid economically and efficiently from fumaric acid or a salt thereof and ammonia or an ammonium salt using a cultured product obtained by aerobically culturing an microorganism belonging to the Genus Brevibacterium and having resistance to α-amino-n-butyric acid.

2 Claims, No Drawings

United States Patent [19]
Debabov et al.
[11] **4,321,325**
[45] **Mar. 23, 1982**

[54] **PROCESS FOR PRODUCING L-THREONINE**

[76] Inventors: **Vladimir G. Debabov**, ulitsa Miklukho-Maklaya, 43, kv. 57; **Nelli I. Zhdanova**, Leningradskoe shosse, 112, korpus 3, kv. 748; **Alexandr K. Sokolov**, Levshinsky, Maly pereulok, 14/9, kv. 113; **Vitaly A. Livshits**, ulitsa Kirovogradskaya, 24, korpus 3, kv. 8; **Jury I. Kozlov**, Yasenevo, Vtoroi mikroraion, korpus 3, kv. 178; **Evgeny M. Khurges**, ulitsa Tikhvinskaya, 1/13, kv. 16; **Nikolai K. Yankovsky**, ulitsa Radischevskaya, 13/15, kv. 59; **Mikhail M. Gusyatiner**, ulitsa Chertanovskaya, 8, korpus 1, kv. 66; **Albert F. Sholin**, Teply Stan, 1a mikroraion, korpus 18, kv. 100; **Viktor P. Antipov**, Suschevsky val, 22, kv. 28; **Tamara M. Pozdnyakova**, ulitsa Dorozhnaya, 20, korpus 3, kv. 50, all of Moscow, U.S.S.R.

[21] Appl. No.: **133,284**

[22] Filed: **Mar. 24, 1980**

[30] **Foreign Application Priority Data**

Jul. 13, 1978 [SU] U.S.S.R. 2781356

[51] **Int. Cl.**[3] **C12P 13/08**; C12N 15/00

[52] **U.S. Cl.** **435/115**; 435/172; 435/849

[58] **Field of Search** 435/115, 172

[56] **References Cited**

U.S. PATENT DOCUMENTS

3,711,375	1/1973	Nakayama et al.	435/115
4,237,224	12/1980	Cohen et al.	435/172

Primary Examiner—Lionel M. Shapiro
Attorney, Agent, or Firm—Steinberg & Raskin

[57] **ABSTRACT**

The process for producing L-threonine consists in that there is cultivated a producer of L-threonine in the capacity of which is used the *Escherichia coli* strain VNIIgenetika M-1 deposited in the Central museum of commercial microorganisms under the All-Union Research Institute for Genetics and Selection of Commercial Microorganisms at a registration No. IIMIIB-1856. The above strain has been selected on the basis of natural variability of the *Escherichia coli* strain VNIIgenetika VL 334/p YN7), obtained by virtue of the genetic engineering techniques through increasing the dose of mutant genes capable of a higher rate of L-threonine production, by introducing a multicopy hydrid plasmid carrying said genes, into a mutant recipient strain. The abovesaid producer is cultivated on a nutrient medium, containing sources of carbon, nitrogen, and some mineral salts in the presence of an antibiotic penicillin, the resultant biomass being then separated from the culture fluid, whereupon the end product is isolated.

4 Claims, No Drawings

United States Patent [19]
Nakamori et al.
[11] **4,211,840**
[45] **Jul. 8, 1980**

[54] **METHOD FOR PRODUCING D-α-AMINO ACID**

[75] Inventors: **Shigeru Nakamori**, Yokohama; **Kenzo Yokozeki**, Kawasaki; **Koji Mitsugi**, Yokohama; **Chikahiko Eguchi**; **Hisao Iwagami**, both of Kawasaki, all of Japan

[73] Assignee: **Ajinomoto Company, Incorporated**, Tokyo, Japan

[21] Appl. No.: **897,003**

[22] Filed: **Apr. 17, 1978**

[30] **Foreign Application Priority Data**

Jun. 8, 1977 [JP] Japan 52/67411
Oct. 3, 1977 [JP] Japan 52/118928
Dec. 26, 1977 [JP] Japan 52/157108

[51] **Int. Cl.**[2] **C12P 13/24**; C12P 13/04
[52] **U.S. Cl.** **435/107**; 435/106; 435/108; 435/109; 435/110; 435/113; 435/114; 435/115; 435/116
[58] **Field of Search** 195/2, 29; 435/106, 435/107, 108, 109, 110, 111, 112, 113, 114, 115, 116, 280, 822, 824, 829, 830, 874

[56] **References Cited**

U.S. PATENT DOCUMENTS

3,964,970 6/1976 Denelli et al. 195/2
4,094,741 6/1978 Yamada et al. 195/29
4,111,749 9/1978 Degen et al. 195/2

FOREIGN PATENT DOCUMENTS

2631048 1/1977 Fed. Rep. of Germany 195/2

Primary Examiner—Robert J. Warden
Attorney, Agent, or Firm—Oblon, Fisher, Spivak, McClelland & Maier

[57] **ABSTRACT**

D-α-amino acids are produced by contacting a 5-substituted hydantoin with an effective amount of an enzyme capable of converting the 5-substituted hydantoin to the D-α-amino acid produced by a microorganism in an aqueous medium at a pH in the range of 4 to 9, the microorganism being capable of utilizing the D-isomer of the 5-substituted hydantoin as the sole nitrogen source, but substantially incapable of utilizing the L-isomer of the 5-substituted hydantoin as the nitrogen source and the substituent of the 5-position being such that upon reaction with the enzyme, an optically active D-α-amino acid isomer is produced; and recovering the D-α-amino acid which accumulates in the aqueous medium.

13 Claims, No Drawings

United States Patent [19]
Kitajima et al.
[11] **3,915,795**
[45] **Oct. 28, 1975**

[54] PROCESS FOR PRODUCING L-5-METHOXYTRYPTOPHAN USING MICROORGANISMS

[75] Inventors: Nakao Kitajima, Tokyo; Shiro Watanabe, Saitama; Isao Takeda, Tokyo, all of Japan

[73] Assignee: Asahi Kasei Kogyo Kabushiki Kaisha, Osaka, Japan

[22] Filed: **Dec. 8, 1972**

[21] Appl. No.: **313,462**

[30] **Foreign Application Priority Data**

Dec. 10, 1971 Japan 46-99394

[52] **U.S. Cl.** ..... 195/29; 195/36 R; 195/37; 195/47
[51] **Int. Cl.**[2] **C12D 13/06**
[58] **Field of Search** 195/49, 29, 47, 30, 37, 195/36

[56] **References Cited**

UNITED STATES PATENTS

2,999,051 9/1961 Malin 195/29
3,808,101 4/1974 Enei et al. 195/29

OTHER PUBLICATIONS

Chem. Abstracts, 71:99120g.
Chem. Abstracts, 75:87103f.
Chem. Abstracts, 69:960n.
Morino et al., J. of Biol. Chem., Vol. 242, No. 12, pp. 2793–2799.

Primary Examiner—A. Louis Monacell
Assistant Examiner—Thomas G. Wiseman
Attorney, Agent, or Firm—Flynn & Frishauf

[57] **ABSTRACT**

1-5-Methoxytryptophan, a material for 5-hydroxytryptophan which is useful as an antidepressant and has hormonal actions against Down's syndrome and the like, is produced by culturing a microorganism, which can produce L-5-lower alkoxytryptophan, in a culture medium containing 5-lower alkoxyindole, together with or without serine, in addition to a carbon source, a nitrogen source, inorganic salts and nutrients.

5 Claims, No Drawings

United States Patent [19]
Mitsugi et al.
[11] **4,016,037**
[45] **Apr. 5, 1977**

[54] **METHOD FOR PRODUCING L-AMINO ACID**

[75] Inventors: **Koji Mitsugi**, Yokohama; **Konosuke Sano**, Machida; **Kenzo Yokozeki**, Kawasaki; **Kazuhiko Yamada**, Fujisawa; **Ichiro Noda**, Yokohama; **Teruhiko Kagawa**; **Chikahiko Eguchi**, both of Kawasaki; **Naohiko Yasuda**, Yokosuka; **Fumihide Tamura**, Kawasaki; **Kazushi Togo**, Yokohama, all of Japan

[73] Assignee: **Ajinomoto Co., Inc.**, Tokyo, Japan

[22] Filed: **Oct. 15, 1975**

[21] Appl. No.: **622,519**

[52] **U.S. Cl.** **195/29**
[51] **Int. Cl.**[2] **C12D 13/06**
[58] **Field of Search** 195/29

[56] **References Cited**

UNITED STATES PATENTS

3,320,135 5/1967 Okumura et al. 195/29
3,494,831 2/1970 Nakayama et al. 195/29

Primary Examiner—Alvin E. Tanenholtz
Attorney, Agent, or Firm—Cooper, Dunham, Clark, Griffin & Moran

[57] **ABSTRACT**

L-amino acids are produced by fermenting a hydantoin compound with *Flavobacterium aminogenes* or its enzymes.

14 Claims, No Drawings

United States Patent [19]
Gatenbeck et al.
[11] **3,963,572**
[45] **June 15, 1976**

[54] **FERMENTATIVE PROCESS FOR THE PRODUCTION OF L-TRYPTOPHAN AND ITS DERIVATIVES**

[75] Inventors: **Sten Vilhelm Gatenbeck**, Taby; **Per Olof Hedman**, Johanneshov, both of Sweden

[73] Assignee: **AB Bofors**, Bofors, Sweden

[22] Filed: **Feb. 28, 1975**

[21] Appl. No.: **554,344**

[30] **Foreign Application Priority Data**

Mar. 5, 1974 Sweden 7402889

[52] **U.S. Cl.** ..... 195/28 N; 195/29
[51] **Int. Cl.**[2] **C12D 13/06**
[58] **Field of Search** ..... 195/28 R, 29, 30, 28 N, 195/47

[56] **References Cited**

UNITED STATES PATENTS

2,999,051 9/1961 Malin 195/29
3,808,101 4/1974 Enei et al. 195/29

Primary Examiner—A. Louis Monacell
Assistant Examiner—Robert J. Warden
Attorney, Agent, or Firm—Pollock, Vande Sande & Priddy

[57] **ABSTRACT**

Fermentation process for preparation of L-tryptophan and its derivatives from indole or derivatives thereof wherein the fermentation is carried out in a substrate with methanol as the main source for carbon and is carried out using a certain type of methanol using bacteria.

21 Claims, No Drawings

United States Patent [19]
Yamada et al.
[11] **4,148,688**
[45] **Apr. 10, 1979**

[54] **PROCESS FOR PREPARING L-METHIONINE**

[75] Inventors: **Hideaki Yamada**, Kyoto; **Satomi Takahashi**, Takatsuki; **Kazushige Sumino**, Akashi; **Hirotaka Fukumitsu**, Kakogawa; **Koji Yoneda**, Amagasaki, all of Japan

[73] Assignee: **Kanegafuchi Kagaku Kogyo Kabushiki Kaisha**, Osaka, Japan

[21] Appl. No.: **763,710**

[22] Filed: **Jan. 28, 1977**

[30] **Foreign Application Priority Data**

Feb. 4, 1976 [JP] Japan 51-11574

[51] **Int. Cl.**[2] **C12D 13/06**
[52] **U.S. Cl.** **195/29**; 195/2
[58] **Field of Search** 195/2, 29

[56] **References Cited**

U.S. PATENT DOCUMENTS

3,963,573 6/1976 Stauffer 195/29
3,964,970 6/1976 Dinelli et al. 195/2

OTHER PUBLICATIONS

Amino Acid and Nucleic Acid; Hiroshi Yamada; No. 19; 1969, pp. 48–56.

Primary Examiner—Raymond N. Jones
Assistant Examiner—Robert J. Warden
Attorney, Agent, or Firm—Armstrong, Nikaido, Marmelstein & Kubovcik

[57] **ABSTRACT**

A process for preparing L-methionine by subjecting DL- or L-N-carbamoylmethionine to the action of a cultured broth, cells or treated cells of microorganisms having a capability in asymmetrically hydrolyzing the carbamoyl group of N-carbamoylmethionine. The process is suited for large-scale economical manufacturing of L-methionine.

8 Claims, No Drawings

United States Patent [19]
Sano et al.
[11] **4,006,057**
[45] **Feb. 1, 1977**

[54] **METHOD OF PRODUCING L-CYSTEINE AND L-CYSTINE**

[75] Inventors: **Konosuke Sano**, Machido; **Keizo Matsuda**, Kawasaki; **Koji Mitsugi**, Yokohama; **Kazuhiko Yamada**, Fujisawa; **Fumihide Tamura**, Kawasaki; **Naohiko Yasuda**, Yokosuka; **Ichiro Noda**, Yokohama, all of Japan

[73] Assignee: **Ajinomoto Co., Inc.**, Tokyo, Japan

[22] Filed: **Nov. 4, 1975**

[21] Appl. No.: **628,840**

[30] **Foreign Application Priority Data**

Nov. 6, 1974 Japan 49-127153
Dec. 3, 1974 Japan 49-137697

[52] **U.S. Cl.** **195/29**; 195/30
[51] **Int. Cl.**[2] **C12D 13/06**
[58] **Field of Search** 195/28, 29, 30

[56] **References Cited**

OTHER PUBLICATIONS

Chemical Abstracts, vol. 57, 7727d, 1962.

Primary Examiner—A. Louis Monacell
Assistant Examiner—Robert J. Warden
Attorney, Agent, or Firm—Oblon, Fisher, Spivak, McClelland & Maier

[57] **ABSTRACT**

A method for producing L-cysteine and/or L-cystine which comprises:

a. holding 2-amino-thiazoline-4-carboxylic acid in an aqueous solution at a pH of 5 to 11 in the presence of an effective amount of enzyme produced by a microorganism; said enzyme being capable of converting the 2-amino-thiazoline-4-carboxylic acid to L-cysteine and/or L-cystine, and said microorganism being capable of growing in a medium containing 2-amino-thiazoline-4-carboxylic acid as a nitrogen source; and

b. recovering the L-cysteine and/or L-cystine formed from said aqueous solution.

17 Claims, No Drawings

United States Patent [19]
Soda et al.
[11] **4,071,405**
[45] **Jan. 31, 1978**

[54] **METHOD OF PRODUCING SULFUR CONTAINING L-AMINO ACIDS**

[75] Inventors: **Kenji Soda**, Uji; **Hidehiko Tanaka**, Kyoto; **Hidetsugu Nakazawa**; **Koji Mitsugi**, both of Yokohama, all of Japan

[73] Assignee: **Ajinomoto Co., Inc.**, Tokyo, Japan

[21] Appl. No.: **696,398**

[22] Filed: **June 15, 1976**

[30] **Foreign Application Priority Data**

June 19, 1975 Japan 50-73774

[51] **Int. Cl.**[2] **C12D 13/06**
[52] **U.S. Cl.** **195/29**
[58] **Field of Search** 195/29

[56] **References Cited**

PUBLICATIONS

Journal of Biochemistry; vol. 78, pp. 1105–1107; 1975.

Primary Examiner—Lionel M. Shapiro
Assistant Examiner—Robert J. Warden
Attorney, Agent, or Firm—Cooper, Dunham, Clark, Griffin & Moran

[57] **ABSTRACT**

Method for the production of substituted sulfur containing L-amino acids by contacting β- or γ-substituted amino acids in an aqueous medium containing methioninase together with the precursor of the substituent.

6 Claims, No Drawings

United States Patent [19]
Stauffer
[11] **3,963,573**
[45] **June 15, 1976**

[54] **PROCESS FOR PRODUCING N-ACYL-L-METHIONINE**

[75] Inventor: **Clyde Eugene Stauffer**, Cincinnati, Ohio

[73] Assignee: **The Procter & Gamble Company**, Cincinnati, Ohio

[22] Filed: **Mar. 3, 1975**

[21] Appl. No.: **554,947**

[52] U.S. Cl. 195/29; 195/2
[51] Int. Cl.[2] C12B 1/00
[58] Field of Search 195/4, 29, 68, 2

[56] References Cited

UNITED STATES PATENTS

2,511,867 6/1950 Neuberg et al. 195/29

OTHER PUBLICATIONS

Brenner et al., "A Simple Enzymatic Method for the Preparation of D and L Methionine" Helv. Chim. Acta. 32 pp. 333–337 (1949).

Perlman et al., "Methods in Enzymology" vol. XIX Proteolytic Enzymes Academic Press 1970 pp. 226–244 and pp. 199–215.

Primary Examiner—A. Louis Monacell
Assistant Examiner—R. B. Penland
Attorney, Agent, or Firm—Jerry J. Yetter; Julius P. Filcik; Richard C. Witte

[57] **ABSTRACT**

A process for producing optically pure N-acyl-L-methionine comprising (1) subjecting an N-acyl-D,L-methionine ester to the action of a proteolytic enzyme selected from the group consisting of sulfhydryl proteinases and microbially derived serine proteinases; and (2) separating the resulting N-acyl-L-methionine. The N-acyl group can be chemically removed to provide L-methionine.

9 Claims, No Drawings

United States Patent [19]
Srinivasan et al.
[11] **4,104,124**
[45] **Aug. 1, 1978**

[54] **PROCESS FOR THE PRODUCTION OF SINGLE CELL PROTEIN AND AMINO ACIDS**

[75] Inventors: **Vadake R. Srinivasan**, Baton Rouge, La.; **Ye-Chin Choi**, Athens, Ga.

[73] Assignee: **Louisiana State University Foundation**, Baton Rouge, La.

[21] Appl. No.: **718,974**

[22] Filed: **Aug. 30, 1976**

[51] **Int. Cl.**[2] **C12B 1/00**; C12D 13/06
[52] **U.S. Cl.** **195/33**; 195/47; 195/96; 195/112; 195/32
[58] **Field of Search** ..... 195/28 R, 32, 33, 36 R, 195/37, 47, 96, 112

[56] **References Cited**

U.S. PATENT DOCUMENTS

3,308,035	3/1967	Douros	195/28 R
3,761,355	9/1973	Callihan et al.	195/33

OTHER PUBLICATIONS

Mandels et al., "Enhanced Cellulose Production by a Mutant of *Trichoderma viride*", Applied Microbiology Jan. 1971, pp. 152–154.
Han et al., "Single Cell Protein from Cellulosic Wastes", Food Technology vol. 25, 1971 pp. 32–35 & 56.

Primary Examiner—R. B. Penland
Attorney, Agent, or Firm—Llewellyn A. Proctor

[57] **ABSTRACT**

A process for the production, by spontaneous or induced mutations from a parent microorganism of the genus Cellulomonas (ATCC-21399), of selected mutants which have the ability to excrete L-glutamic acid or L-lysine, or both, inclusive particularly of certain of the mutant strains produced by the mutagenesis, to wit: Cellulomonas sp. ATCC-21399 strain LC-10, Cellulomonas sp. ATCC-21399 strain A′-1, and Cellulomonas sp ATCC-21399 strain A′-156. In a preferred process comestible, digestible protein is produced from these strains in an aqueous culture medium, or broth, which contains an assimilable source of carbon, particularly cellulose, nitrogen and mineral nutrients. The mutant strains are comparable with the parent organism in cellulolytic activity and growth rate, but the nutritional requirements, notably the need of a yeast extract, are far less exacting than for the parent microorganism, or microorganisms.

14 Claims, No Drawings

United States Patent [19]
Maldonado et al.
[11] **3,986,933**
[45] **Oct. 19, 1976**

[54] **METHOD OF PREPARING YEASTS ENRICHED IN L-LYSINE AND CAPABLE OF EXCRETING ORGANIC ACIDS**

[75] Inventors: **Paul Maldonado**, St Symphorien D'Ozon, **Claude Gaillaridin**, Paris; **Gaëtan Sylvestre**, Epernon; **Georges Glikmans**, Meudon La Foret, all of France

[73] Assignee: **Institut Francais du Petrol, des Carburants et Lubrifiants et Entreprise de Recherches et d'Activities Petrolieres Elf**, Paris and Rueil Malmaison, France

[22] Filed: **Apr. 21, 1975**

[21] Appl. No.: **569,616**

[30] **Foreign Application Priority Data**
Apr. 23, 1974 France 74.14094

[52] **U.S. Cl.** ..... **195/28 R**; 195/79
[51] **Int. Cl.**[2] **C12B 1/00**
[58] **Field of Search** ..... 195/28 R, 30, 36, 37, 195/47, 82, 76, 97, 112, 79

[56] **References Cited**

UNITED STATES PATENTS

3,660,235	5/1972	Okumura et al.	195/37
3,825,472	7/1974	Kubota et al.	195/28 R
3,873,424	3/1975	Kimura et al.	195/36 R

Primary Examiner—A. Louis Monacell
Assistant Examiner—R. B. Penland

[57] **ABSTRACT**

A method of preparing a yeast enriched in L-lysine and capable of excreting an organic acid, such as citric acid, and possibly also isocitric and glutamic acids, when cultivated on a hydrocarbon-containing medium comprises subjecting a yeast of the species *Candida lipolytica* to the action of a mutagenic agent, such as a chemical agent or radiation, cultivating the thus-treated yeast in a culture medium containing a lysine analogue, preferably that to which the original yeast is most sensitive, in a concentration which is about 50 to 100 times greater than that to which the cells of the original yeast are most sensitive, and cultivating the resultant mutated resistant yeast on a medium containing at least one hydrocarbon such as a C_{10}–C_{20} normal paraffin as well as conventional nutrients, the cultivation preferably being effected in an agitated aerated medium at a pH of 3 to 6 and a temperature of 25° to 30° C. The yeast enriched in L-lysine may be recovered from the reaction medium as a useful product and citric acid and other acids may be recovered in conventional manner from the reaction medium.

11 Claims, No Drawings

United States Patent [19]
Asai et al.
[11] **4,066,502**
[45] **Jan. 3, 1978**

[54] **METHOD OF PRODUCING CARBON SOURCE FOR FERMENTATION**

[75] Inventors: **Soichiro Asai**, Tokyo; **Tsutomu Matsuishi**; **Katsunobu Matsushita**, both of Kawasaki; **Shigeho Ikeda**, Yokohama; **Kaetsu Kobayashi**; **Hiromasa Maruyama**, both of Tokyo, all of Japan

[73] Assignee: **Ajinomoto Co., Inc.**, Tokyo, Japan

[21] Appl. No.: **678,116**

[22] Filed: **Apr. 19, 1976**

[51] **Int. Cl.**[2] **C12D 13/06**; C12B 3/04
[52] **U.S. Cl.** **195/47**; 195/29; 195/102
[58] **Field of Search** ..... 195/47, 29, 31 F, 100, 195/102, 106; 127/41

[56] **References Cited**

U.S. PATENT DOCUMENTS

2,492,673	12/1949	Woodward et al.	195/36 R
3,793,146	2/1974	Ishii et al.	195/37
3,812,010	5/1974	Nitsch	195/31 F

Primary Examiner—Lionel M. Shapiro
Attorney, Agent, or Firm—Oblon, Fisher, Spivak, McClelland & Maier

[57] **ABSTRACT**

A hydrolyzate of molasses, containing both glucose and fructose, is mixed with calcium hydroxide, and a fructose addition precipitate is recovered. The residual liquor is neutralized, calcium ions are removed, and then the liquor is used as a carbon source for glutamic acid or lysine fermentation.

The present method may supply very inexpensive fructose to the market.

5 Claims, No Drawings

United States Patent [19]
Zhdanova et al.
[11] **4,054,489**
[45] **Oct. 18, 1977**

[54] **METHOD OF PREPARING L-GLUTAMIC ACID AND ITS SODIUM SALT**

[76] Inventors: **Nelli Isaakovna Zhdanova**, Leningradskoe shosse, 112/1, korpus 3, kv. 748; **Lev Mikhailovich Evstjugov-Babaev**, ulitsa Pushkina, 22, kv. 36; **Roza Mitrofanovna Balitskaya**, ulitsa Vyborgskaya, 4, kv. 6; **Albert Fedorovich Sholin**, Teply Stan, 1a mikroraion, korpus 18, kv. 100; **Tatyana Borisovna Kasatkina**, prospekt Mira, 120, kv. 226; **Natalya Nikolaevna Kuznetsova**, ulitsa Dnepropetrovskaya, 23, korpus 3, kv. 130, all of Moscow, U.S.S.R.

[21] Appl. No.: **616,946**

[22] Filed: **Sept. 26, 1975**

[51] **Int. Cl.**[2] **C12B 1/00**
[52] **U.S. Cl.** ..... **195/47**; 195/36 R; 195/112
[58] **Field of Search** ..... 195/36 R, 47, 112

[56] **References Cited**

U.S. PATENT DOCUMENTS

3,002,889	10/1961	Kinoshita et al.	195/47
3,254,002	5/1966	Megna et al.	195/47

Primary Examiner—R. B. Penland
Attorney, Agent, or Firm—Steinberg & Blake

[57] **ABSTRACT**

The method of preparing L-glutamic acid and its sodium salt by growing, on a nutrient medium containing sources of nitrogen, carbon and mineral salts a strain producent of L-glutamic acid, *Micrococcus glutamicus* "VNIIgenetika" 3144, obtained from the strain *Micrococcus glutamicus* "VNIIGenetika" 490 by multi-step selection with mutagenic factors-diethyl sulphate and ultra-violet radiation— the biotin concentration in the liquid mineral medium preferably being such as to ensure the maximum yield of L-glutamic acid.

4 Claims, No Drawings

United States Patent [19]
Yukawa et al.
[11] **4,276,380**
[45] **Jun. 30, 1981**

[54] **PRODUCTION OF L-AMINO ACIDS**

[75] Inventors: **Hideaki Yukawa; Kazuoki Osumi; Terukazu Nara; Yoshihiro Takayama,** all of Ami, Japan

[73] Assignee: **Mitsubishi Petrochemical Co., Ltd.,** Tokyo, Japan

[21] Appl. No.: **120,963**

[22] Filed: **Feb. 13, 1980**

[30] **Foreign Application Priority Data**

Feb. 13, 1979 [JP] Japan 54-15341
May 18, 1979 [JP] Japan 54-61109

[51] **Int. Cl.**[3] **C12P 13/08**
[52] **U.S. Cl.** **435/115**; 435/247; 435/822; 435/172
[58] **Field of Search** 435/115

[56] **References Cited**

U.S. PATENT DOCUMENTS

3,907,641 9/1975 Nakayama et al. ..... 435/115 X
3,920,520 11/1975 Tanaka et al. 435/115

Primary Examiner—Lionel M. Shapiro
Attorney, Agent, or Firm—Sughrue, Rothwell, Mion, Zinn and Macpeak

[57] **ABSTRACT**

A process for producing L-valine or L-lysine which comprises aerobically culturing a bacterium belonging to the genus Acinetobacter, which utilizes ethanol and has an ability to produce and accumulate L-valine or L-lysine, in a culture medium in which ethanol is the main carbon source to produce and accumulate L-valine and/or L-lysine and collecting.

3 Claims, No Drawings

United States Patent [19]
Tosaka et al.
[11] **4,275,157**
[45] **Jun. 23, 1981**

[54] **METHOD FOR THE PRODUCTION OF L-LYSINE**

[75] Inventors: **Osamu Tosaka,** Tokyo; **Eiji Ono,** Kawasaki; **Masaru Ishihara,** Yokohama; **Hajimu Morioka,** Kawasaki; **Koichi Takinami,** Yokohama, all of Japan

[73] Assignee: **Ajinomoto Company, Incorporated,** Tokyo, Japan

[21] Appl. No.: **56,414**

[22] Filed: **Jul. 10, 1979**

[30] **Foreign Application Priority Data**

Jul. 10, 1978 [JP] Japan 53-83807

[51] **Int. Cl.**[3] **C12P 13/08**
[52] **U.S. Cl.** **435/115**; 435/172; 435/840; 435/843
[58] **Field of Search** 435/115

[56] **References Cited**

U.S. PATENT DOCUMENTS

3,756,916 9/1973 Leavitt 435/115
3,871,960 3/1975 Kubota et al. 435/115

Primary Examiner—Alvin E. Tanenholtz
Attorney, Agent, or Firm—Oblon, Fisher, Spivak, McClelland & Maier

[57] **ABSTRACT**

L-lysine is produced by culturing mutants of Corynebacterium or Brevibacterium which are sensitive to fluoropyruvic acid.

4 Claims, No Drawings

United States Patent [19]
Nakayama et al.
[11] **4,169,763**
[45] **Oct. 2, 1979**

[54] **PROCESS FOR THE PRODUCTION OF L-LYSINE BY FERMENTATION**

[75] Inventors: **Kiyoshi Nakayama, Sagamihara; Kazumi Araki; Yoshitake Tanaka,** both of Machida, all of Japan

[73] Assignee: **Kyowa Hakko Kogyo Co., Ltd.,** Japan

[21] Appl. No.: **814,621**

[22] Filed: **Jul. 11, 1977**

[30] **Foreign Application Priority Data**

Jul. 9, 1976 [JP] Japan 51-81016

[51] **Int. Cl.**[2] **C12D 13/06**
[52] **U.S. Cl.** **435/115**; 435/843
[58] **Field of Search** 195/29, 47

[56] **References Cited**

U.S. PATENT DOCUMENTS

2,979,439 4/1961 Kinoshita et al. 195/47
3,687,810 8/1972 Kurihara et al. 195/29
3,819,483 6/1974 Yoshinaga et al. 195/29
3,905,867 9/1975 Kurimura et al. ..... 195/28 R
3,959,075 5/1976 Inuzuka et al. 195/29
4,066,501 1/1978 Tosaka et al. 195/29

Primary Examiner—Lionel M. Shapiro
Attorney, Agent, or Firm—Craig and Antonelli

[57] **ABSTRACT**

A process for producing L-lysine by fermentation includes the steps of culturing a strain belonging to the genus Corynebacterium having both an ability to produce L-lysine and a resistance to at least one member selected from the group consisting of aspartic acid analogs and sulfa drugs in a nutrient medium, forming and accumulating L-lysine in the resulting culture liquor and thereafter recovering the L-lysine therefrom.

6 Claims, No Drawings

United States Patent [19]
Hirohara et al.
[11] **4,108,723**
[45] **Aug. 22, 1978**

[54] **METHOD FOR OPTICAL RESOLUTION OF DL-LYSINE COMPOUNDS**

[75] Inventors: **Hideo Hirohara; Shigeyasu Nabeshima,** both of Ibaraki; **Tsuneyuki Nagase,** Takatsuki, all of Japan

[73] Assignee: **Sumitomo Chemical Company, Limited,** Osaka, Japan

[21] Appl. No.: **829,945**

[22] Filed: **Sep. 1, 1977**

[30] **Foreign Application Priority Data**

Sep. 8, 1976 [JP] Japan 51-108277

[51] **Int. Cl.**[2] **C07B 19/02**
[52] **U.S. Cl.** ..... **195/2**; 195/3 R; 195/29; 195/30; 195/DIG. 11
[58] **Field of Search** ..... 195/2, 3 R, 29

[56] **References Cited**

U.S. PATENT DOCUMENTS

3,816,254 6/1974 Chibata et al. 195/2
3,963,573 6/1976 Stauffer 195/2

Primary Examiner—Alvin Tanenholtz
Attorney, Agent, or Firm—Cushman, Darby & Cushman

[57] **ABSTRACT**

A method for optical resolution of DL-lysine alkyl ester or acid-addition salts thereof by contacting an aqueous solution of the ester or salts thereof with a non-specific protease obtained by culturing bacteria belonging to the genus Streptomyces, e.g. *St. griseus,* at weakly acidic pH and a temperature not exceeding 60° C until 60 - 90% by weight of L-lysine ester or acid-addition salts thereof takes part in a reaction, and recovering L-lysine or acid-addition salts thereof thus produced by a conventional manner. The protease may be immobilized on an insoluble carrier in advance.

20 Claims, No Drawings

United States Patent [19]
Nakayama et al.
[11] **4,183,786**
[45] **Jan. 15, 1980**

[54] **PROCESS FOR PRODUCTION OF L-SERINE**

[75] Inventors: **Kiyoshi Nakayama**, Sagamihara; **Kazumi Araki; Yoshitake Tanaka**, both of Machida, all of Japan

[73] Assignee: **Kyowa Hakko Kogyo Co., Ltd.**, Japan

[21] Appl. No.: **855,328**

[22] Filed: **Nov. 28, 1977**

[30] **Foreign Application Priority Data**

Nov. 30, 1976 [JP] Japan 51-143748
Dec. 8, 1976 [JP] Japan 51-147389
Dec. 8, 1976 [JP] Japan 51-147390
Dec. 20, 1976 [JP] Japan 51-153024

[51] **Int. Cl.**[2] **C12D 13/06**
[52] **U.S. Cl.** **435/116**; 435/872
[58] **Field of Search** 195/29, 47

[56] **References Cited**

U.S. PATENT DOCUMENTS

3,843,441 10/1974 Kubota et al. 195/30
3,871,958 3/1975 Nakazawa et al. 195/29
3,880,741 4/1975 Kageyama et al. 195/29
4,060,455 11/1977 Wagner et al. 195/29

FOREIGN PATENT DOCUMENTS

50-48187 4/1975 Japan 195/29

Primary Examiner—Lionel M. Shapiro
Attorney, Agent, or Firm—Craig and Antonelli

[57] **ABSTRACT**

A process for converting glycine to L-serine is effected by the use of an aqueous medium containing glycine and microbial cells of a mutant belonging to the genus Nocardia. The mutant is capable of converting glycine to L-serine and has no or lowered ability to decompose L-serine and/or a resistance to at least one metabolic antagonist selected from those of glycine, serine, methionine, glutamine, histidine, leucine, isoleucine, valine, purine, pyrimidine or folic acid. The L-serine is accumulated in the aqueous medium and is recovered therefrom.

11 Claims, No Drawings

United States Patent [19]
Tsuchida et al.
[11] **3,970,519**
[45] **July 20, 1976**

[54] **PROCESS FOR PRODUCING L-LEUCINE**

[75] Inventors: **Takayasu Tsuchida**, Kawasaki; **Haruo Momose**, Kamakura; **Yoshio Hirose**, Fujisawa, all of Japan

[73] Assignee: **Ajinomoto Co., Inc.**, Tokyo, Japan

[22] Filed: **Mar. 4, 1975**

[21] Appl. No.: **555,114**

[30] **Foreign Application Priority Data**

Mar. 15, 1974 Japan 49-29645

[52] **U.S. Cl.** **195/29**; 195/30; 195/47
[51] **Int. Cl.**[2] **C12D 13/06**
[58] **Field of Search** 195/29, 30, 47

[56] **References Cited**

UNITED STATES PATENTS

3,668,073 6/1972 Kurihara et al. 195/29
3,865,690 2/1975 Okumura et al. 195/29

Primary Examiner—A. Louis Monacell
Assistant Examiner—Robert J. Warden
Attorney, Agent, or Firm—Cooper, Dunham, Clark, Griffin & Moran

[57] **ABSTRACT**

Microorganisms of the genus Brevibacterium or Corynebacterium which resist feedback inhibition by leucine or its analogs and require at least one of isoleucine, threonine or methionine as a growth nutriment produce L-leucine under aerobic culture conditions.

3 Claims, No Drawings

United States Patent [19]
Wagner et al.
[11] **4,060,455**
[45] **Nov. 29, 1977**

[54] **PROCESS FOR THE MICROBIAL PRODUCTION OF L-SERINE USING PSEUDOMONAS SP. DSM 672**

[75] Inventors: **Fritz Wagner**, Braunschweig-Stockheim; **Hermann Sahm**, Wolfenbuttel; **Walter Hartmut Keune**, Braunschweig, all of Germany

[73] Assignee: **Gesellschaft fur Biotechnologische Forschung mbH, (GBF)**, Braunschweig-Stockheim, Germany

[21] Appl. No.: **747,725**

[22] Filed: **Dec. 6, 1976**

[30] **Foreign Application Priority Data**

Dec. 4, 1975 Germany 2554530

[51] **Int. Cl.**[2] **C12D 13/06**
[52] **U.S. Cl.** **195/29**; 195/49
[58] **Field of Search** ..... 195/29, 49, 96, 47, 195/79, 76, 112, 28 R, 30

[56] **References Cited**

U.S. PATENT DOCUMENTS

3,623,952 11/1971 Kubota et al. 195/29
3,692,628 9/1972 Wakayama et al. ..... 195/28 R
3,843,441 10/1974 Kubota et al. 195/30
3,880,741 4/1975 Kageyama et al. 195/29
3,939,042 2/1976 Wakayama et al. 195/49

OTHER PUBLICATIONS

Kubo et al., "L-Serine," *Chemical Abstracts*, vol. 82, No. 23, p. 410, (1975), abs. No. 153767y.
Wada, "L-Serine," *Chemical Abstracts*, vol. 68, No. 7, p. 2745, (1968), abs. No. 28476n.
Kubota et al., "Fermentative Production of L-Serine," *Chemical Abstracts*, vol. 75, No. 8, (1971), abs. No. 33893v.
Nakayama et al., "L-Serine," *Chemical Abstracts*, vol. 72, No. 7, (1970), pp. 183 and 184, abs. No. 30313h.

Primary Examiner—Raymond N. Jones
Assistant Examiner—Thomas G. Wiseman
Attorney, Agent, or Firm—Scully, Scott, Murphy & Presser

[57] **ABSTRACT**

L-serine is produced by aerobic cultivation of Pseudomonas Sp. DSM 672, or mutants thereof, in a nutrient medium including methanol and glycine.

14 Claims, No Drawings

United States Patent [19]
Schutt
[11] **4,260,684**
[45] **Apr. 7, 1981**

[54] **STEREOSELECTIVE RESOLUTION OF PHENYLGLYCINE DERIVATIVES AND 4-HYDROXYPHENYLGLYCINE DERIVATIVES WITH ENZYME RESINS**

[75] Inventor: **Hermann Schutt**, Wuppertal, Fed. Rep. of Germany

[73] Assignee: **Bayer Aktiengesellschaft**, Leverkusen, Fed. Rep. of Germany

[21] Appl. No.: **8,63**[illegible]

[22] Filed: **Feb. 1, 1979**

[30] **Foreign Application Priority Data**

Feb. 21, 1978 [DE] Fed. Rep. of Germany 2807286

[51] **Int. Cl.**[3] **C12P 13/04**; C07B 19/02; C12P 13/02
[52] **U.S. Cl.** **435/106**; 435/128; 435/129; 435/280; 560/37; 560/39; 560/41; 560/251; 562/401; 564/155
[58] **Field of Search** ..... 260/562 R, 562 N; 195/2, 29, 30; 562/443, 444, 450, 401; 560/37, 39, 41; 435/106, 128, 129, 135, 136, 174, 180, 280

[56] **References Cited**

U.S. PATENT DOCUMENTS

3,832,388 8/1974 Lorenz ..... 562/401 X
3,929,574 12/1975 Wood et al. 195/29
3,963,573 6/1976 Stauffer 195/29
3,971,700 7/1976 Boesten 195/29
4,033,817 7/1977 Gregor 195/2
4,080,259 3/1978 Boesten et al. 195/2
4,092,219 5/1978 Lin et al. 195/29
4,108,723 8/1978 Hirohara et al. 195/2
4,132,596 1/1979 Meiller et al. 195/63

Primary Examiner—Natalie Trousof
Assistant Examiner—Vera C. Clarke
Attorney, Agent, or Firm—Sprung, Felfe, Horn, Lynch & Kramer

[57] **ABSTRACT**

The invention encompasses a process for the stereoselective resolution of DL-phenylglycine derivatives using proteolytic enzymes bonded to resin carriers.

14 Claims, No Drawings

United States Patent [19]
Bauer
[11] **4,262,092**
[45] **Apr. 14, 1981**

[54] **PROCESS FOR PRODUCING N-ACYL-D-PHENYLALANINE ESTER**

[75] Inventor: **Dennis P. Bauer**, Baton Rouge, La.
[73] Assignee: **Ethyl Corporation**, Richmond, Va.

[21] Appl. No.: **37,162**
[22] Filed: **May 8, 1979**
[51] **Int. Cl.**[3] **C07B 19/02**
[52] **U.S. Cl.** **435/280**; 435/222; 435/225
[58] **Field of Search** 435/280

[56] **References Cited**

U.S. PATENT DOCUMENTS

3,031,380	4/1962	Minagawa et al.	435/172
3,347,752	10/1967	Ravenbusch et al.	435/280
3,813,317	5/1974	Benoiton et al.	435/280
3,907,638	9/1975	Uzuki et al.	435/280
3,963,573	6/1976	Stauffer	435/280

FOREIGN PATENT DOCUMENTS

855051 11/1977 Belgium

OTHER PUBLICATIONS

Guntelberg et al., C. R. Trav. Lab. Carlsberg, Ser. Chim 29, 36 (1954).
Subromanian et al., Biochemistry, vol. 3, No. 12, pp. 1861–1874, (1964).
Smith et al., Journal of Biological Chemistry, vol. 241, No. 24, pp. 5974–5976, (1966).
Narahoshi et al., Journal of Biochemistry, vol. 62, No. 6, pp. 633–641, (1967).
Danno et al., Ag. Biol. Chem., vol. 31, No. 10, pp. 1151–1158, (1967).
Barel et al., Journal of Biological Chemistry, vol. 243, No. 7, pp. 1344–1348, (1968).
Misaki et al., Agr. Biol. Chem., vol. 34, No. 9, pp. 1383–1392, (1970).
Kareko et al., Synthetic Production and Utilization of Amino Acids, J. Wiley & Sons, pp. 171–179, (1974).

Primary Examiner—Alvin E. Tanenholtz
Attorney, Agent, or Firm—Donald L. Johnson; John F. Sieberth; James M. Pelton

[57] **ABSTRACT**

Production of optically pure N-acyl-D-phenylalanine ester by reacting a racemic mixture of N-acyl-D,L-phenylalanine ester with a proteolytic enzyme and separating the resulting N-acyl-D-phenylalanine ester from the solution with subsequent removal of the N-acyl and ester groups to provide D-phenylalanine.

9 Claims, No Drawings

United States Patent [19]
Meiller et al.
[11] **4,132,596**
[45] **Jan. 2, 1979**

[54] **SUPPORT-AMINOACYLASE COMPLEXES**

[75] Inventors: **François Meiller, Palaiseau; Bernard Mirabel, Fresnes**, both of France
[73] Assignee: **Rhone Poulenc Industries, Paris**, France

[21] Appl. No.: **799,117**
[22] Filed: **May 20, 1977**
[30] **Foreign Application Priority Data**
May 26, 1976 [FR] France 76 15984
[51] **Int. Cl.**[2] **C07G 7/02**
[52] **U.S. Cl.** **195/63**; 195/29; 195/68; 195/DIG. 11
[58] **Field of Search** ..... 195/29, 63, 68, DIG. 11

[56] **References Cited**

U.S. PATENT DOCUMENTS

3,705,084	12/1972	Reynolds	195/63
3,796,634	3/1974	Haynes et al.	195/63
3,915,797	10/1975	Ishimatsu et al.	195/63
4,034,139	7/1977	Mazarguil et al.	195/68 X

Primary Examiner—David M. Naff
Attorney, Agent, or Firm—McDougall, Hersh & Scott

[57] **ABSTRACT**

Aminoacylase is absorbed on a porous inorganic support that has been coated with a film of cross-linked polymer containing tertiary amine or quaternary ammonium salt groups to provide support-aminoacylase complexes for use in the separation of racemic acetylamino-acids.

8 Claims, No Drawings

United States Patent [19]
Viglia et al.
[11] **4,248,967**
[45] **Feb. 3, 1981**

[54] **ENZYMIC COMPLEXES ADAPTED TO CONVERT RACEMIC HYDANTOINS INTO OPTICALLY ACTIVE AMINOACIDS, AND THEIR APPLICATIONS**

[75] Inventors: **Aurelio Viglia**, Monterotondo; **Eugenio Fascetti**, Rome; **Elena Perricone**, Rome; **Ludwig Degen**, Rome, all of Italy
[73] Assignee: **Snamprogetti S.p.A.**, Milan, Italy

[21] Appl. No.: **885,194**
[22] Filed: **Mar. 10, 1978**
[30] **Foreign Application Priority Data**
Mar. 15, 1977 [IT] Italy 21232 A/77
[51] **Int. Cl.**[3] **C12P 13/04**; C07B 19/02
[52] **U.S. Cl.** **435/106**; 435/280; 435/227; 435/832; 435/833
[58] **Field of Search** 195/2, 29, 62, 65; 435/280, 106–116

[56] **References Cited**

U.S. PATENT DOCUMENTS

3,964,970	6/1976	Dinelli et al.	195/2
4,065,353	12/1977	Cecere et al.	195/2
4,094,741	6/1978	Yamada et al.	195/29
4,111,749	9/1978	Degen et al.	195/2

Primary Examiner—Lionel M. Shapiro
Attorney, Agent, or Firm—Morgan, Finnegan, Pine, Foley & Lee

[57] **ABSTRACT**

Enzymic complexes deriving from micro-organisms belonging to the Bacillaceae family using an hydantoin or a derivative thereof as inductor of the enzymic activity are used for hydrolysing racemic hydantoins into optically active aminoacids. The method of preparation is an enzymic hydrolysis fostered by the enzyme deriving from such special micro-organisms. The hydrolysis can be effected at a comparatively high temperature, which can reach even 60° C.

4 Claims, 1 Drawing Figure

United States Patent [19]
Bauer
[11] **4,259,441**
[45] **Mar. 31, 1981**

[54] **PROCESS FOR RESOLVING D, L-LEUCINE**

[75] Inventor: **Dennis P. Bauer**, Baton Rouge, La.
[73] Assignee: **Ethyl Corporation**, Richmond, Va.

[21] Appl. No.: **76,211**
[22] Filed: **Sep. 17, 1979**
[51] **Int. Cl.**[3] **C12Q 1/38**; C07B 19/02
[52] **U.S. Cl.** **435/23**; 435/116; 435/280
[58] **Field of Search** 435/23, 116, 280

[56] **References Cited**

U.S. PATENT DOCUMENTS

3,031,380	4/1962	Minagawa et al.	435/280
3,813,317	5/1974	Benoiton et al.	435/280
3,907,638	9/1975	Uzuki et al.	435/280
3,963,573	6/1976	Stauffer	435/280

FOREIGN PATENT DOCUMENTS

660817 11/1951 United Kingdom 435/280

OTHER PUBLICATIONS

Journal of Biol. Chem., vol. 243, No. 7, pp. 1344–1348 (1968).
Kirk-Othmer, Encyclopedia of Chemical Technology, 2nd Ed., vol. 2, J. Wiley & Sons, Inc., New York, pp. 156–197.
"Synthetic Production & Utilization of Amino Acids", by J. Wiley & Sons, N.Y., pp. 136–140 (1974).
Greenstein et al., "Chemistry of the Amino Acids", vol. 3, J. Wiley & Sons, N.Y., pp. 2080–2085 (1961).
Guntelberg et al., "Purification of the Proteolytic Enzyme from Bacillus Subtilis", C. R. Trav. Lab., Carlsberg, Ser. Chim. 29 (1954).
Subramanian et al., "The Major Alkaline Proteinase of Aspergillus Oryzae, Aspergillopeptidene", Biochem. vol. 3, No. 12., pp. 1861–1874 (1964).
Journal of Biol. Chem., vol. 241; pp. 5974–5976 (1966).
Journal of Biochemistry vol. 62, No. 6, pp. 633–641 (1967).
Agr. Biol. Chem., vol. 31, No. 10, pp. 1151–1158 (1967).
Agr. Biol. Chem., vol. 34, No. 9, pp. 1383–1392 (1970).

Primary Examiner—Benoit Castel
Attorney, Agent, or Firm—Donald L. Johnson; John F. Sieberth; James M. Pelton

[57] **ABSTRACT**

Production of optically pure D-leucine and L-leucine ester by treating a racemic mixture of N-acyl-D,L-leucine ester with a proteolytic enzyme and separating the resulting N-acyl-L-leucine and N-acyl-D-leucine ester from the solution with subsequent removal of the N-acyl and ester groups to provide L-leucine and D-leucine, respectively.

9 Claims, No Drawings

United States Patent [19]
Zhdanova et al.
[11] **4,237,228**
[45] **Dec. 2, 1980**

[54] **METHOD OF PRODUCING L-ISOLEUCINE USING *BREVIBACTERIUM FLAVUM***

[76] Inventors: **Nelli I. Zhdanova**, Leningradskoe shosse, 112, korpus 3, kv. 748; **Tatyana V. Leonova**, ulitsa Svobody, 81, korpus 5, kv. 852; **Ljudmila F. Kozyreva**, 4 Novopodmoskovny pereulok, 4, kv. 80, all of Moscow, U.S.S.R.

[21] Appl. No.: **917,989**

[22] Filed: **Jun. 22, 1978**

[30] **Foreign Application Priority Data**

Jun. 29, 1977 [SU] U.S.S.R. 2501219

[51] **Int. Cl.**[3] **C12P 13/06**; C12N 15/00; C12R 1/13

[52] **U.S. Cl.** **435/116**; 435/172; 435/840

[58] **Field of Search** 195/47, 96, 79, 112, 195/29; 435/106, 116, 172, 840

[56] **References Cited**

U.S. PATENT DOCUMENTS

3,058,888	10/1962	Chibata et al.	195/29
3,231,478	1/1966	Uemura et al.	195/29
3,262,861	7/1966	Kinoshita et al.	195/29
3,502,544	3/1970	Sugiskai et al.	195/29
3,767,529	10/1973	Yoshinaga et al.	195/30

FOREIGN PATENT DOCUMENTS

51-6237	2/1976	Japan	195/47
51-21077	6/1976	Japan	195/47
889187	2/1962	United Kingdom	195/30

OTHER PUBLICATIONS

Ikeda, et al., "Screening of L-Isoleucine Producers among Ethiomine Resistant Mutants of L-Threonine Producing Bacteria", *Agr. Biol. Chem.*, vol. 40, No. 3, (1976), pp. 511-516.

Kisumi, et al., "Isoleucine Accumulation by Regulatory Mutants of *Serratia Marcescens*: Lack of both Feeback Inhibition and Repression" J. Bact., vol. 110, No. 2, (1972), pp. 761-763.

Shilo, et al., "Production of L-Isoleucine by AHV Resistant Mutants of *Brevibacterium flavum*", *Agr. Biol. Chem.*, vol. 37, No. 9, (1973), pp. 2053-2061.

Kase, et al., "L-Isoleucine Production by Analog-resistant Mutants Derived from Threonine-Producing Strain of *Corgnebacterium glutamicam*", *Agr. Biol. chem.*, vol. 41, No. 1, (1977), pp. 109-116.

Primary Examiner—Thomas G. Wiseman
Attorney, Agent, or Firm—Fleit & Jacobson

[57] **ABSTRACT**

A method of producing L-isoleucine which comprises culturing the strain of *Brevibacterium flavum* VNII Genetika 10-89 deposited under the number CMIM B-1507 in a nutrient medium containing sources of nitrogen, carbon, mineral salts and vitamins and under aerobic conditions.

Said strain makes it possible to produce L-isoleucine with a yield of 17 g/l and more.

10 Claims, No Drawings

United States Patent [19]
Goi et al.
[11] **4,226,941**
[45] **Oct. 7, 1980**

[54] **PROCESS FOR THE OPTICAL RESOLUTION OF D,L-2-AMINO-4-METHYLPHOSPHINOBUTYRIC ACID**

[75] Inventors: **Hitoshi Goi**, Chiba; **Shinji Miyado**; **Takashi Shomura**, both of Yokohama; **Akira Suzuki**, Tokyo; **Tomizo Niwa**; **Yujiro Yamada**, both of Yokohama, all of Japan

[73] Assignee: **Meiji Seika Kaisha, Ltd.**, Tokyo, Japan

[21] Appl. No.: **79,366**

[22] Filed: **Sep. 27, 1979**

[51] **Int. Cl.**[3] **C07B 19/02**

[52] **U.S. Cl.** **435/280**

[58] **Field of Search** 435/106, 280

[56] **References Cited**

U.S. PATENT DOCUMENTS

3,347,752	10/1967	Rauenbusch	435/280
3,386,888	6/1968	Chibata	435/280
3,527,671	9/1970	Zenk	435/280
3,669,837	6/1972	Parcell	435/280
3,816,254	6/1974	Chibata	435/280
3,841,966	10/1974	Soichiro	435/280
3,963,573	6/1976	Stauffer	435/280

OTHER PUBLICATIONS

Karger, An Introduction to Separation Science, Wiley, New York, 1973, pp. 552-554.

Primary Examiner—Ernest G. Therkorn
Attorney, Agent, or Firm—Larson, Taylor and Hinds

[57] **ABSTRACT**

L-2-Amino-4-methylphosphinobutyric acid (L-MPGA) which is useful as bactericide and herbicide can be prepared by optical resolution of its racemic mixture, D,L-MPGA with the action of a microbial acylase. The process comprises providing D,L-MPGA in the form of its N-acyl derivative, reacting N-acyl-D,L-MPGA in an aqueous medium with a microbial acylase having an optically specific hydrolytic activity, whereby selectively eliminating the acyl group of N-acyl-L-MPGA to give a mixture of L-MPGA and N-acyl-D-MPGA and isolating L-MPGA from the mixture. The acylase is produced by cultivating a microbial strain belonging to the genus Pseudomonas, Streptomyces or Aspergillus, particularly *Pseudomonas maltophilia* BN-233, *Streptomyces violascens* SF 2072, *Streptomyces diastatochromogenes* SF 2073, Aspergillus sp. KS-101 or Aspergillus sp. KS-102.

15 Claims, No Drawings

United States Patent [19]
Demny et al.
[11] **4,061,542**
[45] **Dec. 6, 1977**

[54] **2-METHYL-L-ARGININE PRODUCED BY CULTIVATING STREPTOMYCES STRAIN**

[75] Inventors: **Thomas Casimir Demny**, Livingston; **Hubert Maehr**, Belleville, both of N.J.

[73] Assignee: **Hoffmann-La Roche Inc.**, Nutley, N.J.

[21] Appl. No.: **664,834**

[22] Filed: **Mar. 8, 1976**

[51] **Int. Cl.**[2] **C12D 9/14**

[52] **U.S. Cl.** ..... **195/80 R**; 195/29; 260/534 R; 260/438.1; 548/313

[58] **Field of Search** ..... 195/80 R

[56] **References Cited**

U.S. PATENT DOCUMENTS

3,865,694	2/1975	Berger et al.	195/80 R
3,993,545	11/1976	Pruess et al.	195/80 R

Primary Examiner—Alvin E. Tanenholtz
Attorney, Agent, or Firm—Samuel L. Welt; Bernard S. Leon; William H. Epstein

[57] **ABSTRACT**

The compound 2-methyl-L-arginine having useful antibiotic and anti-bacterial properties and its methods of preparation from a new species of Streptomyces sp. X-11837 or from 5-hydroxy-2-pentanone.

2 Claims, No Drawings

United States Patent [19]
Nakayama et al.
[11] **4,086,137**
[45] **Apr. 25, 1978**

[54] **PROCESS FOR THE PRODUCTION OF L-ARGININE BY FERMENTATION**

[75] Inventors: **Kiyoshi Nakayama**, Sagamihara; **Kazumi Araki**, Machida; **Hajime Yoshida**, Sagamihara, all of Japan

[73] Assignee: **Kyowa Hakko Kogyo Co., Ltd.**, Tokyo, Japan

[21] Appl. No.: **766,630**

[22] Filed: **Feb. 8, 1977**

[30] **Foreign Application Priority Data**

Feb. 18, 1976 Japan 51-15737

[51] **Int. Cl.**[2] **C12D 13/06**

[52] **U.S. Cl.** **195/29**; 195/47

[58] **Field of Search** 195/47, 29

[56] **References Cited**

U.S. PATENT DOCUMENTS

3,734,829	5/1973	Chibata et al.	195/47

Primary Examiner—Alvin E. Tanenholtz
Attorney, Agent, or Firm—Fitzpatrick, Cella, Harper & Scinto

[57] **ABSTRACT**

L-arginine is produced by fermentation of a microorganism belonging to the genus Bacillus capable of producing L-arginine and having a nutritional requirement for at least one compound of the group consisting of methionine, histidine, threonine, proline, isoleucine, lysine, adenine, guanine and uracil or its precursor. L-arginine is accumulated in the culture liquor and may be recovered therefrom.

9 Claims, No Drawings

United States Patent [19]
Suhara et al.
[11] **4,204,044**
[45] **May 20, 1980**

[54] **PROCESS FOR THE MANUFACTURE OF OPTICALLY ACTIVE α-HYDROXYCARBOXYLIC ACIDS**

[75] Inventors: **Yasuji Suhara; Hiromi Maruyama,** both of Yokohama; **Toyoaki Sawada,** Zushi; **Mayumi Ogawa,** Kamakura; **Kazuteru Yokose,** Urayasu; **Morio Fujiu,** Tokyo; **Kimihiro Watanabe,** Ayase, all of Japan

[73] Assignee: **Hoffmann-La Roche Inc.,** Nutley, N.J.

[21] Appl. No.: **926,592**

[22] Filed: **Jul. 19, 1978**

[30] **Foreign Application Priority Data**
Jul. 26, 1977 [CH] Switzerland 9218/77

[51] **Int. Cl.**[2] **C12D 1/02**

[52] **U.S. Cl.** **435/280;** 435/837; 435/843; 435/832; 435/876; 435/877; 435/886

[58] **Field of Search** 195/2, 30; 435/280

[56] **References Cited**
U.S. PATENT DOCUMENTS
3,823,069 7/1974 Miyaki et al. 195/2
OTHER PUBLICATIONS
Chemical Abstracts, vol. 47, 1953, 3366i.

Primary Examiner—Lionel M. Shapiro
Attorney, Agent, or Firm—Jon S. Saxe; Bernard S. Leon; William H. Epstein

[57] **ABSTRACT**
The present invention is concerned with a process for the manufacture of optically active α-hydroxycarboxylic acids, especially a process for the manufacture of optically pure D- or L-α-hydroxycarboxylic acids.

9 Claims, No Drawings

United States Patent [19]
Nakamori et al.
[11] **4,224,409**
[45] **Sep. 23, 1980**

[54] **METHOD FOR PRODUCING L-PROLINE BY FERMENTATION**

[75] Inventors: **Shigeru Nakamori,** Yokohama; **Hajimu Morioka,** Kawasaki; **Fumihiro Yoshinaga,** Fujisawa, all of Japan

[73] Assignee: **Ajinomoto Company, Incorporated,** Tokyo, Japan

[21] Appl. No.: **7,782**

[22] Filed: **Jan. 30, 1979**

[30] **Foreign Application Priority Data**
Feb. 1, 1978 [JP] Japan 53-10660

[51] **Int. Cl.**[2] **C12P 13/24**
[52] **U.S. Cl.** **435/107**
[58] **Field of Search** 195/29, 47; 435/107

[56] **References Cited**
U.S. PATENT DOCUMENTS
3,819,483 6/1974 Yoshinaga et al. 195/29

Primary Examiner—Lionel M. Shapiro
Attorney, Agent, or Firm—Oblon, Fisher, Spivak, McClelland & Maier

[57] **ABSTRACT**
A method for producing L-proline by fermentation which comprises culturing an L-proline producing mutant in a culture medium until L-proline is accumulated in the culture medium, and recovering the accumulated L-proline; said mutant belonging to the genus Brevibacterium, Corynebacterium or Microbacterium and being resistant to DL-3,4-dehydroproline.

9 Claims, No Drawings

United States Patent [19]
Boesten et al.
[11] **4,080,259**
[45] **Mar. 21, 1978**

[54] **PROCESS OF PREPARING L AND D α-AMINO ACIDS BY ENZYME TREATMENT OF DL-α-AMINO ACID AMIDE**

[75] Inventors: **Wilhelmus Hubertus Joseph Boesten,** Sittard; **Lucia Redempta Maria Meyer-Hoffman,** Munstergeleen, both of Netherlands

[73] Assignee: **Novo Industri A/S,** Denmark

[21] Appl. No.: **756,969**

[22] Filed: **Jan. 4, 1977**

[30] **Foreign Application Priority Data**
Jan. 8, 1976 Luxembourg 74142

[51] **Int. Cl.**[2] **C12D 13/06;** C12B 1/00
[52] **U.S. Cl.** **195/2;** 195/29; 195/65
[58] **Field of Search** ..... 195/2, 29, 65, 66 R

[56] **References Cited**
PUBLICATIONS
Hegeman, Journal of Bacteriology Mar. 1966, vol 91, pp. 1140–1154.

Primary Examiner—Lionel M. Shapiro
Attorney, Agent, or Firm—Watson, Cole, Grindle & Watson

[57] **ABSTRACT**
A method of producing enzyme preparations having L-α-amino acyl amidase activity comprising cultivating a micro-organism selected from the group consisting of *Pseudomonas putida, Pseudomonas reptilivora,* and *Pseudomonas arvilla* in a nutrient medium and separating an enzyme preparation from said nutrient medium.
A process of preparing L-α-amino acid and D-α-amino acid amide from DL-α-amino acid amide by contacting said DL-α-amino acid amide with an enzyme preparation obtained by cultivating a micro-organism selected from the group consisting of *Pseudomonas putida, Pseudomonas reptilivora,* and *Pseudomonas arvilla* in the presence of a nutrient medium and separating the L-α-amino acid and D-α-amino acid amide thus formed.

6 Claims, No Drawings

United States Patent [19]
Dinelli et al.
[11] **3,964,970**
[45] **June 22, 1976**

[54] **PROCESS FOR THE PREPARATION OF L-CARBAMYL-AMINO ACIDS AND OF THE CORRESPONDING L-AMINO ACIDS**

[75] Inventors: **Diuo Dinelli,** San Donato Milanese; **Franco Morisi,** San Giovanni in Persiceto; **Delio Zaccardelli,** Monterotondo, all of Italy

[73] Assignee: **Snam Progetti S.p.A.,** San Donato, Milanese, Italy

[22] Filed: **May 10, 1974**

[21] Appl. No.: **469,019**

[30] **Foreign Application Priority Data**
May 11, 1973 Italy 23957/73

[52] **U.S. Cl.** 195/2; 195/29
[51] **Int. Cl.**[2] **C12D 13/06**
[58] **Field of Search** 195/29, 2

[56] **References Cited**
UNITED STATES PATENTS
3,320,135 5/1967 Okumura et al. 195/29
3,494,831 2/1970 Nakayama et al. 195/29
OTHER PUBLICATIONS
Enzyme Engineering, Interscience Publishers pp. 139–141 (1972).

Primary Examiner—Alvin E. Tanenholtz
Attorney, Agent, or Firm—Ralph M. Watson

[57] **ABSTRACT**
A process for the preparation of only one of the two stereoisomer forms carbamyl amino acids is provided wherein certain heterocyclic compounds having an asymmetrical carbon, such as 5-substituted hydantoins, are hydrolyzed in the presence of certain enzymes, such as dihydropyrimidinase extracted from calf liver. In another embodiment of the invention, the corresponding amino acids are provided by hydrolyzing the carbamyl amino acids in the presence of these same enzymes.

23 Claims, 1 Drawing Figure

United States Patent [19]
Franzmann et al.
[11] **4,271,269**
[45] **Jun. 2, 1981**

[54] **REGENERATION OF AN ENZYME IMMOBILIZATE**

[75] Inventors: **Giselher Franzmann**, Witten; **Hans-Leo Hülsmann**, Wetter, both of Fed. Rep. of Germany

[73] Assignee: **Dynamit Nobel Aktiengesellschaft**, Troisdorf, Fed. Rep. of Germany

[21] Appl. No.: **39,482**

[22] Filed: **May 15, 1979**

[30] **Foreign Application Priority Data**

May 19, 1978 [DE] Fed. Rep. of Germany 2821890

[51] **Int. Cl.**[3] **C12N 11/14**
[52] **U.S. Cl.** **435/176**; 435/106; 435/174
[58] **Field of Search** 435/174, 176, 181, 106

[56] **References Cited**

U.S. PATENT DOCUMENTS

3,519,538 7/1970 Messing et al. 435/176

OTHER PUBLICATIONS

Tosz et al., Studies on Continuous Enzyme Reactions, Agr. Biol. Chem., vol. 33, No. 7, 1969, (pp. 1053–1059).
Messing, R. A., Immobilized Enzymes for Industrial Reactors, Academic Press, N.Y., 1975, (pp. 79–95).
Zaborsky, O., Immobilized Enzymes, CRC Press, Cleveland, Ohio, 1973, (pp. 75–82).

Primary Examiner—David M. Naff
Attorney, Agent, or Firm—Sprung, Felfe, Horn, Lynch & Kramer

[57] **ABSTRACT**

An enzyme immobilizate comprising an amorphous siliceous support to which an enzyme is bonded by adsorption via an amino alkoxy silane is regenerated after the enzyme has become inactive by contacting the immobilizate containing the inactive enzyme with a solution of inorganic ammonium sulfate or a solution of primary, secondary, tertiary or quaternary C_1 to C_6 alkyl or hydroxy alkyl ammonium sulfate to desorb the enzyme and then contacting the support with a fresh enzyme solution to adsorb active enzyme to the support.

6 Claims, No Drawings

United States Patent [19]
Yamada et al.
[11] **4,237,227**
[45] *** Dec. 2, 1980**

[54] **PROCESS FOR PREPARING D-N-CARBAMOYL-α-AMINO ACIDS**

[75] Inventors: **Hideaki Yamada**, Kyoto; **Satomi Takahashi**, Takatsuki; **Koji Yoneda**, Amagasaki, all of Japan

[73] Assignee: Kanegafuchi Kagaku Kogyo Kabushiki Kaisha, Osaka, Japan

[*] Notice: The portion of the term of this patent subsequent to Jun. 13, 1992, has been disclaimed.

[21] Appl. No.: **862,853**

[22] Filed: **Dec. 21, 1977**

[30] **Foreign Application Priority Data**

Dec. 30, 1976 [JP] Japan 51/157713

[51] **Int. Cl.**[3] **C12P 13/02**
[52] **U.S. Cl.** **435/108**; 435/106; 435/109; 435/110; 435/113; 435/115; 435/116; 435/129; 435/280
[58] **Field of Search** 195/29; 435/280, 129, 435/106, 108, 109, 110, 113, 115, 116

[56] **References Cited**

U.S. PATENT DOCUMENTS

3,320,135 5/1967 Okumura et al. 195/29
3,494,831 2/1970 Nakayama et al. 195/29
4,016,037 4/1977 Mitsugi et al. 195/29
4,094,741 6/1978 Yamada et al. 195/29
4,111,749 9/1978 Degen et al. 195/29

OTHER PUBLICATIONS

Journal of the Agricultural Chemical Society of Japan, vol. 43, No. 8, pp. 528–535 (1969).

Primary Examiner—Alvin F. Tanenholtz
Attorney, Agent, or Firm—Armstrong, Nikaido, Marmelstein & Kubovcik

[57] **ABSTRACT**

A process for preparing D-N-carbamoyl-α-amino acids by subjecting 5-substituted hydantoins to the action of a cultured broth, cells or treated cells of microorganisms having an ability in asymmetrically hydrolyzing the hydantoin ring in an aqueous medium of pH 7 to 10. The process is suited for the industrial manufacture of D-N-carbamoyl-α-amino acids which are useful intermediates for the preparation of medicines.

8 Claims, No Drawings

United States Patent [19]
Yamada et al.
[11] **4,242,452**
[45] *** Dec. 30, 1980**

[54] **PROCESS FOR PREPARING N-CARBAMOYL-D-THIENYLGLYCINES**

[75] Inventors: **Hideaki Yamada**, Kyoto; **Satomi Takahashi**, Kobe; **Koji Yoneda**, Amagasaki, all of Japan

[73] Assignee: **Kanegafuchi Kagaku Kogyo Kabushiki Kaisha**, Osaka, Japan

[*] Notice: The portion of the term of this patent subsequent to Jun. 13, 1995, has been disclaimed.

[21] Appl. No.: **18,876**

[22] Filed: **Mar. 9, 1979**

[30] **Foreign Application Priority Data**

Mar. 15, 1978 [JP] Japan 53/30062

[51] **Int. Cl.**[3] **C12P 17/00**
[52] **U.S. Cl.** **435/117**; 435/106; 435/280; 435/828; 435/832; 435/840; 435/843; 435/863; 435/874; 435/826; 435/872; 435/886
[58] **Field of Search** 435/117, 280, 106

[56] **References Cited**

U.S. PATENT DOCUMENTS

3,198,804 8/1965 Johnson et al. 260/306.7
4,065,353 12/1977 Cecere et al. 435/129
4,094,741 6/1978 Yamada et al. 435/129

FOREIGN PATENT DOCUMENTS

53-6489 7/1978 Japan

OTHER PUBLICATIONS

Nishimura et al., J. Chem. Soc. Japan, vol. 82, No. 12, 1688–1691 (1961).

Primary Examiner—Alvin E. Tanenholtz
Attorney, Agent, or Firm—Armstrong, Nikaido, Marmelstein & Kubovcik

[57] **ABSTRACT**

A process for preparing N-carbamoyl-D-(2-thienyl or 3-thienyl)glycine by subjecting 5-(2-thienyl or 3-thienyl)hydantoin to the action of a cultured broth, cells or treated cells of microorganisms having an ability of stereospecifically hydrolyzing the hydantoin ring. N-carbamoyl-D-(2-thienyl or 3-thienyl)glycine is a useful intermediate for the preparation of medicines and can be readily converted into D-(2-thienyl or 3-thienyl)glycine.

11 Claims, No Drawings

United States Patent [19]
Chibata et al.
[11] **4,224,411**
[45] **Sep. 23, 1980**

[54] **IMMOBILIZED AMINOACYLASE**

[75] Inventors: **Ichiro Chibata**, Suita; **Tetsuya Tosa**, Kyoto; **Takao Mori**, Takatsuki; **Taizo Watanabe**, Nagaokakyo; **Motoki Fujimura**, Ikeda, all of Japan

[73] Assignee: **Tanabe Seiyaku Co., Ltd.**, Osaka, Japan

[21] Appl. No.: **911,995**

[22] Filed: **Jun. 2, 1978**

[30] **Foreign Application Priority Data**

Jul. 12, 1977 [JP] Japan 52/83680

[51] **Int. Cl.**[3] **C12N 11/02**; C12N 11/10; C12P 13/04
[52] **U.S. Cl.** **435/177**; 435/106; 435/178
[58] **Field of Search** ..... 195/63, 68, DIG. 11, 195/29; 435/188, 180, 177, 178, 179, 174, 227, 106

[56] **References Cited**

U.S. PATENT DOCUMENTS

3,386,888 6/1968 Chibata et al. ..... 195/63 X
4,008,124 2/1977 Fujita et al. ..... 195/68 X
4,090,919 5/1978 Chibeta et al. 195/63

FOREIGN PATENT DOCUMENTS

1061717 3/1967 United Kingdom 435/227

OTHER PUBLICATIONS

Birnbaum, S. M., Aminoacylase, Methods In Enzymology, vol. II, Academic Press, Inc., New York, 1955, (pp. 115–119).

Primary Examiner—David M. Naff
Attorney, Agent, or Firm—Bierman & Bierman

[57] **ABSTRACT**

An immobilized aminoacylase preparation is obtained by adsorbing tannin on a water-insoluble, hydrophilic carrier to give a water-insoluble tannin preparation, adsorbing aminoacylase on the tannin preparation to give a water-insoluble tannin-aminoacylase preparation, and then binding ferric or ferrous ion thereto. The immobilized preparation obtained above sustains a high rate of enzymatic activity for a long period of time when used in an enzymatic reaction thereof with N-acyl-DL-amino acids.

2 Claims, No Drawings

United States Patent [19]
Suhara et al.
[11] **4,202,943**
[45] **May 13, 1980**

[54] **RESOLUTION OF A RACEMATE**

[75] Inventors: **Yasuji Suhara; Hiromi Maruyama,** both of Yokohama; **Sayuri Itoh,** Yokosuka; **Kazuteru Yokose,** Urayasu, all of Japan

[73] Assignee: **Hoffmann-La Roche Inc.,** Nutley, N.J.

[21] Appl. No.: **923,842**

[22] Filed: **Jul. 12, 1978**

Related U.S. Application Data

[63] Continuation-in-part of Ser. No. 839,525, Oct. 5, 1977, abandoned.

[30] **Foreign Application Priority Data**

Oct. 12, 1976 [CH] Switzerland 12875/76

[51] **Int. Cl.**[2] **C12P 13/04**
[52] **U.S. Cl.** **435/280;** 435/106

[58] **Field of Search** 195/2, 29; 435/280

[56] **References Cited**

U.S. PATENT DOCUMENTS

3,816,254 6/1974 Chibati et al. 195/2
3,971,700 7/1976 Boesten 195/2

OTHER PUBLICATIONS

Chemical Abstracts, vol. 82, 15278(p) 1975.
Chemical Abstracts, vol. 82, 29677(e) 1975.

Primary Examiner—Alvin E. Tanenholtz
Attorney, Agent, or Firm—Jon S. Saxe; Bernard S. Leon; George W. Johnston

[57] **ABSTRACT**

A process for the resolution of a racemate, namely of DL-N-benzyloxycarbonyl-2-(p-hydroxyphenyl)-glycine.

9 Claims, No Drawings

United States Patent [19]
Nakamori et al.
[11] **4,184,918**
[45] **Jan. 22, 1980**

[54] **METHOD FOR PRODUCING 4-FORMYL-2-AMINO-BUTYRIC ACID (GLUTAMIC SEMIALDEHYDE)**

[75] Inventors: **Shigeru Nakamori,** Yokohama; **Kenzo Yokozeki,** Kawasaki; **Koji Mitsugi,** Yokohama, all of Japan

[73] Assignee: **Ajinomoto Company Incorporated,** Tokyo, Japan

[21] Appl. No.: **901,088**

[22] Filed: **Apr. 28, 1978**

[30] **Foreign Application Priority Data**

May 2, 1977 [JP] Japan 52-50930

[51] **Int. Cl.**[2] **C12D 13/06**
[52] **U.S. Cl.** **435/106;** 435/108; 435/842; 435/840

[58] **Field of Search** 195/47, 29, 30

[56] **References Cited**

PUBLICATIONS

Baich et al., Biochim. Biophysica Acta, vol. 104, pp. 397–404 (1965).
Berg et al., Journal of Bacteriology, Jun. 1974, vol. 118, pp. 928–939 (Jun. 1974).

Primary Examiner—Lionel M. Shapiro
Attorney, Agent, or Firm—Oblon, Fisher, Spivak, McClelland & Maier

[57] **ABSTRACT**

A method for producing 4-formyl-2-amino-butyric acid(FABA), which comprises: culturing a mutant capable of producing FABA and belonging to the genus Brevibacterium or Corynebacterium in a culture medium until a substantial amount of FABA has accumulated in the culture medium, and recovering the accumulated FABA from the culture medium.

6 Claims, No Drawings

United States Patent [19]
Simon
[11] **4,251,631**
[45] **Feb. 17, 1981**

[54] **CROSS-LINKED ENZYME MEMBRANE**

[75] Inventor: **Shulamith Simon,** Ramat Gan, Israel

[73] Assignee: **Research Products Rehovot Ltd.,** Rehovot, Israel

[21] Appl. No.: **8,894**

[22] Filed: **Feb. 1, 1979**

[30] **Foreign Application Priority Data**

Feb. 23, 1978 [IL] Israel 54116

[51] **Int. Cl.**[3] **C12P 13/04;** C12N 11/08; C12M 1/40; C12N 9/76
[52] **U.S. Cl.** **435/106;** 435/95; 435/137; 435/176; 435/180; 435/190; 435/213; 435/288; 435/280
[58] **Field of Search** 435/174, 176, 177, 180, 435/181, 288, 137, 213, 190, 69, 95, 106, 280

[56] **References Cited**

U.S. PATENT DOCUMENTS

3,705,084 12/1972 Reynolds 435/180
3,796,634 3/1974 Haynes et al. 435/180
3,804,719 4/1974 Messing 435/176
3,977,941 8/1976 Vieth et al. 435/180
4,102,746 7/1978 Goldberg ..... 435/288 X

FOREIGN PATENT DOCUMENTS

1183260 3/1970 United Kingdom .

OTHER PUBLICATIONS

Silman et al., Papain Membrane on a Collodion Matrix Science, vol. 150, 1965 (pp. 758–760).
Simon et al., Effectiveness of Enzyme—Membrane Filtration Reactors, Biotechnological Applications of Protein and Enzymes, Academic Press, N.Y., 1977 (pp. 169–181).
Zaborsky, O., Immobilized Enzymes, CRC Press, Cleveland, Ohio, 1973 (pp. 61–74).

Primary Examiner—David M. Naff
Attorney, Agent, or Firm—Millen & White

[57] **ABSTRACT**

A cross-linked enzyme membrane is prepared by directly adsorbing enzymes into the pores of a microporous non-fibrous filter membrane made of a silica modified vinylchloride polymer and then cross-linking the enzyme with a bi-functional coupling agent whereby enzyme molecules are cross-linked to each other without chemically bonding the enzyme molecules to the membrane. The cross-linked enzyme membrane is used to carry out enzymatic reactions by passing a solution of substrate for the enzyme through the membrane under a pressure differential.

15 Claims, No Drawings

United States Patent [19]
Takinami et al.
[11] **3,971,701**
[45] **July 27, 1976**

[54] **METHOD FOR PRODUCING L-GLUTAMIC ACID BY FERMENTATION**

[75] Inventors: **Koichi Takinami,** Yokohama; **Takashi Tanaka,** Kawasaki; **Michiaki Chiba,** Yokohama; **Yoshio Hirose,** Fujisawa, all of Japan

[73] Assignee: **Ajinomoto Co., Inc.,** Tokyo, Japan

[22] Filed: **Oct. 7, 1974**

[21] Appl. No.: **512,480**

[30] **Foreign Application Priority Data**

Oct. 17, 1973 Japan 48-116666

[52] **U.S. Cl.** **195/47;** 195/79; 195/96; 195/112; 195/114
[51] **Int. Cl.**[2] **C12D 13/06;** C12K 1/02; C12B 1/20
[58] **Field of Search** 195/96, 47, 112, 79, 195/29, 114

[56] **References Cited**

UNITED STATES PATENTS

3,164,531 1/1965 Okada et al. 195/47
3,399,114 8/1968 Ohsawa 195/114

FOREIGN PATENTS OR APPLICATIONS

7,200,673 10/1972 Japan 195/47

OTHER PUBLICATIONS

Chem. Abstracts 73:97360K.
Nakayama et al., "Induction of Nutritional Mutants of Glutamic Acid Bacteria and Their Amino Acid Accumulation", J. Gen. Appl. Microbiol., vol. 7, No. 1 (1961), pp. 41–51.

Primary Examiner—A. Louis Monacell
Assistant Examiner—Thomas G. Wiseman
Attorney, Agent, or Firm—Hans Berman; Kurt Kelman

[57] **ABSTRACT**

Mutants of glutamic acid producing strains of Brevibacterium which are more sensitive to N-palmitoylglutamic acid than the parent strains require less surfactant to suppress excessive biotin activity in a fermentation medium for permitting glutamic acid production and correspondingly less antifoaming agent without loss of glutamic acid yield.

5 Claims, No Drawings

1982 UPDATE

This section presents 1982 data for the six areas of Biotechnology defined and profiled earlier in this report. The 1982 Update Profiles begin on the following pages:

	Page
MUTATION/GENETIC ENGINEERING	239
ENZYMES PER SE	249
IMMOBILIZED ENZYMES	257
TISSUE CULTURE	263
STARCH HYDROLYSATES	269
AMINO ACIDS	275

The 1982 Update Profiles contain the following information:

- **Activity Indices:** For the years 1980-1982, averages are shown in five categories* -- Percent Growth, Percent Foreign Share, Percent Corporate Owned, Percent Government Owned, and Percent U.S. Owned of Foreign.

- **Patent Activity By Date:** Patent activity through December 1982 is shown in two tables. The first table presents the yearly distribution of patents by date of grant and country of origin or general ownership category. The second table distributes the same data by date of patented application.

- **Organizational Patenting:** This is an alphabetical list of organizations which received patents in the technology during 1982, and includes the patent numbers and titles.

- **Inventors of Individually Owned Patents:** For patents granted in 1982 which were unassigned or assigned to an individual at time of grant, this list shows the inventor's name and address and gives the patent number and title.

---

*Defined on page 5.

BIOTECHNOLOGY 1982 UPDATE - MUTATION/GENETIC ENGINEERING

1980-82 AVERAGES

PERCENT GROWTH	72.65
PERCENT FOREIGN	38.24
PERCENT CORPORATE OWNED	81.18
PERCENT GOVERNMENT OWNED	4.12
PERCENT U.S. OWNED OF FOREIGN	9.23
1980-82 XR/OR	.44

DEFINITIONS

PERCENT GROWTH = 1980-82 PATENTS/1973-82 PATENTS X 100.

PERCENT FOREIGN = 1980-82 U.S. PATENTS WITH A FOREIGN RESIDENT INVENTOR/1980-82 PATENTS X 100

PERCENT CORPORATE OWNED = 1980-82 U.S. PATENTS ASSIGNED TO CORPORATIONS/1980-82 PATENTS X 100.

PERCENT GOVERNMENT OWNED = 1980-82 U.S. PATENTS ASSIGNED TO THE U.S. AND FOREIGN GOVERNMENTS/1980-82 PATENTS X 100.

PERCENT U.S. OWNED OF FOREIGN = 1980-82 U.S. PATENTS WITH A FOREIGN RESIDENT INVENTOR THAT ARE ASSIGNED TO A U.S. ORGANIZATION/1980-82 U.S. PATENTS WITH A FOREIGN RESIDENT INVENTOR X 100.

1980-82 XR/OR = 1980-82 U.S. PATENTS WITH A CROSS REFERENCE DESIGNATION/1980-82 U.S. PATENTS WITH AN ORIGINAL PRIMARY DESIGNATION.

BIOTECHNOLOGY 1982 UPDATE - MUTATION/GENETIC ENGINEERING

PATENT ACTIVITY (1/63-12/82) BY DATE OF PATENT GRANT

	NUMBER OF PATENTS															
	63-68	1969	1970	1971	1972	1973	1974	1975	1976	1977	1978	1979	1980	1981	1982	TOTAL
TOTAL	11	4	1	9	4	2	11	7	21	11	8	4	10	38	122	263
U.S. ORIGIN	5	4		3	2		5	2	10	4	3	2	6	24	75	145
FOREIGN ORIGIN	6		1	6	2	2	6	5	11	7	5	2	4	14	47	118
JAPAN	2			4	1		1	2	2	1	3			5	17	38
FRANCE					1		1		2	2		1		1	7	15
WEST GERMANY	2						1	1		2			1	2	5	14
UNITED KINGDOM				1		1			3		1		1		6	13
SWITZERLAND						1	2	1						1		5
ISRAEL															4	4
NETHERLANDS	1						1							1	1	4
CANADA			1						1						2	4
SWEDEN				1					1						2	4
U.S.S.R.										1			1	1	1	4
ITALY									1					1	1	3
AUSTRIA												1	1			2
BELGIUM								1		1						2
AUSTRALIA									1							1
HUNGARY														1		1
INDIA											1					1
SPAIN															1	1
DENMARK														1		1
MEXICO	1															1
U.S. ORIGIN	5	4		3	2		5	2	10	4	3	2	6	24	75	145
U.S. CORP. OWNED	3	3		3	2		4	2	9	4	3	2	6	20	60	121
U.S. GOVT. OWNED	1								1					2	1	5
U.S. INDIV. OWNED	1	1					1							2	13	18
FOREIGN OWNED															1	1
FOREIGN ORIGIN	6		1	6	2	2	6	5	11	7	5	2	4	14	47	118
U.S. OWNED						2	1	1			1			2	4	11
FOREIGN OWNED	6		1	6	2		5	4	11	7	4	2	4	12	43	107
FOREIGN CORP.	6		1	6	2		4	4	8	6	4	1	3	8	35	88
FOREIGN GOVT.												1			3	4
FOREIGN INDIV.							1		3	1			1	4	5	15

BIOTECHNOLOGY 1982 UPDATE - MUTATION/GENETIC ENGINEERING

PATENT ACTIVITY (PATENTS GRANTED 1/67-12/82) BY DATE OF PATENT APPLICATION

	NUMBER OF PATENTED APPLICATIONS															
	PRE 69	1969	1970	1971	1972	1973	1974	1975	1976	1977	1978	1979	1980	1981	1982	TOTAL
TOTAL	13	5	5	3	7	8	12	15	11	16	23	50	68	17	1	254
U.S. ORIGIN	6	3	1	1	3	3	4	8	6	7	17	29	38	13	1	140
FOREIGN ORIGIN	7	2	4	2	4	5	8	7	5	9	6	21	30	4		114
JAPAN	4		2	1		1	3		2	2	1	7	13	1		37
FRANCE			1		1	1		3		3	2	2	2			15
WEST GERMANY			1			1			1	1	1	3	4			12
UNITED KINGDOM		2					3			1		2	4	1		13
SWITZERLAND				1	1	2							1			5
ISRAEL													4			4
NETHERLANDS	1				1							1		1		4
CANADA	1						1					1		1		4
SWEDEN	1						1				1		1			4
U.S.S.R.								1			1	1	1			4
ITALY								1	1			1				3
AUSTRIA										2						2
BELGIUM					1			1								2
AUSTRALIA								1								1
HUNGARY												1				1
INDIA									1							1
SPAIN												1				1
DENMARK												1				1
MEXICO																
U.S. ORIGIN	6	3	1	1	3	3	4	8	6	7	17	29	38	13	1	140
U.S. CORP. OWNED	5	3	1	1	2	3	4	7	6	7	15	27	25	11	1	118
U.S. GOVT. OWNED								1			1		2			4
U.S. INDIV. OWNED	1				1						1	2	10	2		17
FOREIGN OWNED													1			1
FOREIGN ORIGIN	7	2	4	2	4	5	8	7	5	9	6	21	30	4		114
U.S. OWNED		1		2		1			1			1	4	1		11
FOREIGN OWNED	7	1	4		4	4	8	7	4	9	6	20	26	3		103
FOREIGN CORP.	7	1	3		4	4	6	5	4	8	4	15	20	3		84
FOREIGN GOVT.										1		1	2			4
FOREIGN INDIV.			1				2	2			2	4	4			15

ORGANIZATIONAL PATENTING

ABBOTT LABORATORIES
4331589 - DEOXYRIBONUCLEIC ACID SYNTHESIS USING BINDING PROTEIN EXTRACTED FROM CHICK EMBRYO FIBROBLASTS

AJINOMOTO COMPANY INCORPORATED
4334020 - METHOD OF PRODUCING L-GLUTAMIC ACID BY FERMENTATION
4346169 - METHOD FOR PRODUCTION OF L-ARGININE BY FERMENTATION
4346170 - METHOD FOR PRODUCING L-LYSINE BY FERMENTATION
4347317 - METHOD FOR PRODUCING L-GLUTAMIC ACID BY FERMENTATION
4347318 - METHOD FOR PRODUCING L-THREONINE BY FERMENTATION

ASTRA LAKEMEDEL AKTIEBOLAG
4339445 - METHOD FOR COMBATING VIRUS INFECTION

BETHESDA RESEARCH LABORATORY
4342833 - IMMOBILIZED RESTRICTION ENDONUCLEASES

BOARD OF REGENTS, THE UNIVERSITY OF TEXAS SYSTEM
4328209 - CHOLERA VACCINE

CETUS CORPORATION
4351901 - METHOD FOR SINGLE NUCLEOTIDE ALTERATION

CHILDREN'S HOSPITAL MEDICAL CENTER
4345026 - MUTAGENICITY ASSAY

C M INDUSTRIES
4340535 - CYTOTOXIC PRODUCTS FORMED BY COVALENT BONDING OF THE A CHAIN OF RICIN WITH AN ANTIBODY AND THE PROCESS FOR THE IR PREPARATION AND USE

ELI LILLY AND COMPANY
4309504 - PROCESS FOR PREPARING NARASIN
4316959 - PROCESS FOR PRODUCTION OF ANTIBIOTIC FROM STREPTOMYCES
4322497 - PROCESS FOR TRANSDUCING +I ESCHERICHIA COLI +B K12 +102 1776
4329472 - ANTIBIOTIC A-33853 AND THE TETRAACETYL DERIVATIVE THEREOF
4342829 - PROCESS FOR PREPARING NARASIN

ENDOWMENT AND ALUMNI FOUNDATION AT MONTANA STATE UNIVERSITY
4342746 - METHOD FOR TREATING DUTCH ELM DISEASE

ENDOWMENT AND RESEARCH FOUNDATION AT MONTANA STATE UNIVERSIT
4338298 - VACCINE FOR PASSIVE IMMUNIZATION AGAINST ENTERIC COLIBACILLOSIS AND METHOD OF USE

ENS BIO LOGICALS INC.
4353989 - CHEMICAL SYNTHESIS APPARATUS FOR PREPARATION OF POLYNUCLEOTIDES

FARMITALIA CARLO ERBA, S.P.A.
4309503 - PREPARATION OF 11-DEOXY ANTHRACYCLINE ANTIBIOTICS

FORSYTH DENTAL INFIRMARY FOR CHILDREN
4324860 - LACTATE DEHYDROGENASE MUTANTS OF +I STREPTOCOCCUS MUTANS

FRAUNHOFER-GESELLSCHAFT ZUR FORDERUNG DER ANGEWANDTEN FORSCH
4330680 - INTEGRATED SERIES-CONNECTED SOLAR CELL

G. D. SEARLE & CO.
4349629 - PLASMID VECTORS, PRODUCTION ANDUSE THEREOF
4357421 - SYNTHETIC GENE CODING FOR INFLUENZA HEMAGGLUTININ

BIOTECHNOLOGY 1982 UPDATE - MUTATION/GENETIC ENGINEERING

ORGANIZATIONAL PATENTING

GENENTECH, INC.
4310662 - NUCLEOSIDIC PHOSPHORYLATING AGENT AND METHODS
4342832 - METHOD OF CONSTRUCTING A REPLICABLE CLONING VEHICLE HAVING QUASI-SYNTHETIC GENES
4356270 - RECOMBINANT DNA CLONING VEHICLE
4366246 - METHOD FOR MICROBIAL POLYPEPTIDE EXPRESSION

GESELLSCHAFT FUR STRAHLEN- UND UMWELTFORSCHUNG MBH MUNCHEN
4352558 - APPARATUS FOR MEASURING PARTICLE CHARACTERISTICS

GIST-BROCADES N.V.
4341871 - ACTIVE DRIED BAKER'S YEAST

GREEN CROSS CORPORATION
4313938 - INTERFERON INDUCER AND METHOD OF PREPARING SAME

HENKEL KOMMANDITGESELLSCHAFT AUF AKTIEN(HENKEL KGAA)
4320195 - STEROID PRODUCTION
4362815 - PROCESS FOR THE PREPARATION OF DEFECTIVE MUTANTS OF MICROORGANISMS

INSTITUT NATIONAL DE LA RECHERCHE AGRONOMIQUE
4330560 - PROCESS FOR PRODUCING FOOD PROTEINS OF FUNGAL ORIGIN OR FROM MULTICELLULAR ORGANISMS FEMENTATION APPARATUS AND PROTEINS SO-PRODUCED
4350684 - PREPARATION OF +I SALMONELLA ABORTUS OVIS \ STRAINS AND VACCINE COMPOSITIONS CONTAINING THEM

INTERNATIONAL INSTITUTE OF DIFFERENTIATION LIMITED
4316962 - NOVEL CELL LINE

JAPAN FOUNDATION FOR ARTIFICIAL ORGANS
4350156 - METHOD AND APPARATUS FOR ON-LINE FILTRATION REMOVAL OF MACROMOLECULES FROM A PHYSIOLOGICAL FLUID

KUREHA KAGAKU KOGYO KABUSHIKI KAISHA
4315851 - PHARMACEUTICAL COMPOSITION HAVING ANTITUMOR ACTIVITY

LESAFFRE ET CIE
4318929 - PROCESS FOR OBTAINING NEW STRAINS OF YEAST FOR BREAD-MAKING AND NOVEL STRAINS OF YEAST THUS PREPARED
4318930 - STRAINS OF YEAST FOR BREAD-MAKING AND NOVEL STRAINS OF YEAST THUS PREPARED

LEVER BROTHERS COMPANY
4329448 - MICROBIAL HETEROPOLYSACCHARIDE
4357423 - MICROBIAL HETEROPOLYSACCHARIDE

MASSACHUSETTS INSTITUTE OF TECHNOLOGY
4332899 - PROCESS FOR PRODUCING MALTASE

MAX-PLANCK-GESELLSCHAFT ZUR FORDERUNG DER WISSENSCHAFTEN E.V
4331764 - SEMINAL PLASMA RIBONUCLEASE AND METHOD FOR ITS RECOVERY

MILES LABORATORIES INC.
4355103 - NOVEL STRAIN OF +I BACILLUS LICHENIFORMIS \ USEFUL IN THE PRODUCTION OF GLUCOSE ISOMERASE AND METHOD OF SCREEN ING BACILLUS MUTANTS FOR ABILITY TO PRODUCE GLUCOSE ISOMERASE IN THE ABSENCE OF XYLOSE
4358604 - N-AMINOALKYL IODOTHYRONINE DERIVATIVES

MITSUBISHI PETROCHEMICAL CO., LTD.
4326029 - PROCESS FOR PRODUCTION OF L-ASPARTIC ACID

NATIONAL RESEARCH DEVELOPMENT CORPORATION
4350683 - ANTIBODY PRODUCTION FROM HYBRID CELL LINE
4360597 - STREPTOMYCES PLASMID AND CULTURE

ORGANIZATIONAL PATENTING

NODA INSTITUTE FOR SCIENTIFIC RESEARCH
4332897 - NOVEL BACTERIOPHAGE AND METHOD FOR PREPARING SAME
4348477 - METHOD FOR PREPARING A RECOMBINANT DNA PHAGE
4348478 - METHOD FOR PREPARATION OF A RECOMBINANT DNA PHAGE

NORDEN LABORATORIES, INC.
4328210 - MODIFIED PASTEURELLA BACTERIA AND VACCINES PREPARED THEREFROM
4335106 - PROCESSES FOR THE GROWTH OF A MODIFIED +I PASTEURELLA MULTOCIDA \ BACTERIA AND PREPARATION OF A VACCINE THEREF ROM

ORTHO PHARMACEUTICAL CORPORATION
4361549 - COMPLEMENT-FIXING MONOCLONAL ANTIBODY TO HUMAN T CELLS, AND METHODS OF PREPARING SAME
4361550 - COMPLEMENT-FIXING MONOCLONAL ANTIBODY TO HUMAN SUPPRESSOR T CELLS AND METHODS OF PREPARING SAME
4363799 - MONOCLONAL ANTIBODY TO HUMAN T CELLS, AND METHODS FOR PREPARING SAME
4364932 - MONOCLONAL ANTIBODY TO HUMAN CYTOTOXIC AND SUPPRESSOR T CELLS AND METHODS OF PREPARING SAME
4364933 - MONOCLONAL ANTIBODY TO A HUMAN THYMOCYTE ANTIGEN AND METHODS OF PREPARING SAME
4364935 - MONOCLONAL ANTIBODY TO A HUMAN PROTHYMOCYTE ANTIGEN AND METHODS OF PREPARING SAME
4364936 - MONOCLONAL ANTIBODY TO A HUMAN MONOCYTE ANTIGEN AND METHODS OF PREPARING SAME
4364937 - MONOCLONAL ANTIBODY TO A HUMAN T CELL ANTIGEN AND METHODS OF PREPARING SAME

PALO ALTO MEDICAL RESEARCH FOUNDATION
4361647 - SANDWICH IMMUNOASSAY AND COMPOSITIONS FOR USE THEREIN

PETROLEUM FERMENTATIONS N.V.
4311829 - APO-+62 -EMULSANS
4311830 - APO-+60 -EMULSANS
4311831 - APO-+104 -EMULSANS
4311832 - PROEMULSANS

PRESIDENT AND FELLOWS OF HARVARD COLLEGE
4332892 - PROTEIN SYNTHESIS
4332901 - CLONING VECTOR
4336336 - FUSED GENE AND METHOD OF MAKING AND USING SAME
4338397 - MATURE PROTEIN SYNTHESIS

PUBLIC HEALTH LABORATORY SERVICE, CENTER FOR APPLIED MICROBI
4342827 - PRODUCTION OF ENZYMES

REGENTS OF UNIVERSITY OF CALIFORNIA
4322499 - ADRENOCORTICOTROPIN-LIPOTROPIN PRECURSOR GENE
4350764 - MICROBIOLOGICAL SYNTHESIS OF BETA ENDORPHIN
4363877 - RECOMBINANT DNA TRANSFER VECTORS

RESEARCH CORPORATION
4321365 - OLIGONUCLEOTIDES USEFUL AS ADAPTORS IN DNA CLONING, ADAPTED DNA MOLECULES, AND METHODS OF PREPARING ADAPTORS A ND ADAPTED MOLECULES
4337314 - GENETICALLY ATTENUATED BACTERIAL VACCINES WITH MULTIPLE MUTATIONS OF THE SAME PHENOTYPE
4362867 - RECOMBINANT CDNA CONSTRUCTION METHOD AND HYBRID NUCLEOTIDES USEFUL IN CLONING

SALK INSTITUTE FOR BIOLOGICAL STUDIES
4316891 - EXTENDED N-TERMINAL SOMATOSTATIN

SANRAKU-OCEAN CO., LTD.
4337312 - PROCESS FOR PRODUCING ANTHRACYCLINE GLYCOSIDES

SCHERING CORPORATION
4315852 - EXTRACTION OF INTERFERON FROM BACTERIA

ORGANIZATIONAL PATENTING

SCRIPPS CLINIC AND RESEARCH FOUNDATION
4342566 - SOLID PHASE ANTI-C3 ASSAY FOR DETECTION OF IMMUNE COMPLEXES
4361509 - ULTRAPURIFICATION OF FACTOR VIII USING MONOCLONAL ANTIBODIES

SERONO LABORATORIES, INC.
4311688 - COMPOSITION AND METHOD FOR CANCER DETECTION IN HUMANS

SLOAN-KETTERING INSTITUTE FOR CANCER RESEARCH
4317877 - PROCESS FOR DETECTING THE PRESENCE OF MALIGNANT AND PRE-MALIGNANT CELLS IN HUMANS

SUMITOMO CHEMICAL COMPANY, LIMITED
4332717 - PURIFICATION OF HUMAN GROWTH HORMONE

SYBRON CORPORATION
4350770 - MICROBIOLOGICAL PROCESS FOR REMOVING OLEAGINOUS MATERIAL FROM WASTEWATER AND MICROBIOLOGICAL COMBINATION CAPABLE OF SAME

TEIJIN LIMITED
4350626 - ANTITUMOR HYBRID AND PROCESS FOR THE PREPARATION THEREOF
4357273 - ANTITUMOR PROTEIN HYBRID AND PROCESS FOR THE PREPARATION THEREOF
4363758 - CYTOTOXIC PROTEIN HYBRID AND PROCESS FOR THE PREPARATION THEREOF

TRANSAGRA CORPORATION
4349569 - METHOD OF CULTURING +I LACTOBACILLUS ACIDOPHILUS

UNITED STATES OF DEPARTMENT OF HEALTH & HUMAN SERVICES
4356117 - CHEMICAL MODIFICATIONS OF PROTEINS WHICH INDUCE NEW RECEPTOR SPECIFICITIES AND THEREFORE ELICIT NEW EFFECTS IN CELLS

UNIVERSITY OF SASKATCHEWAN
4311797 - ANUCLEATED LIVE +I E. COLI +B VACCINE

UNIVERSITY PATENTS, INC.
4332785 - IMMUNOASSAY FOR MEASUREMENT OF RETICULOCYTES, AND IMMUNOREACTIVE REAGENTS FOR USE THEREIN

UPJOHN COMPANY
4332898 - HYBRID PLASMID AND PROCESS OF MAKING SAME
4332900 - CONSTRUCTION OF CO-INTEGRATE PLASMIDS FROM PLASMIDS OF STREPTOMYCES AND ESCHERICHIA
4338400 - CO-INTEGRATE PLASMIDS AND THEIR CONSTRUCTION FROM PLASMIDS OF ESCHERICHIA AND STREPTOMYCES
4340674 - COINTEGRATE PLASMIDS AND THEIR CONSTRUCTION FROM PLASMIDS OF ESCHERICHIA AND STREPTOMYCES
4343906 - HYBRID PLASMID OF PBR322 AND STREPTOMYCES PLASMID AND +I E. COLI +B CONTAINING SAME
4345033 - +I MYCOBACTERIUM FORTUITUM +B MUTANT
4362816 - HYBRID PLASMID AND PROCESS OF MAKING SAME
4362817 - HYBRID PLASMID AND PROCESS OF MAKING SAME

WISTAR INSTITUTE
4349528 - MONOCOLONAL HYBRIDOMA ANTIBODY SPECIFIC FOR HIGH MOLECULAR WEIGHT CARCINOEMBRYONIC ANTIGEN

INVENTORS OF INDIVIDUALLY OWNED PATENTS (ALPHA LISTING)

INVENTOR NAME			STREET	CITY	ST	ZIP/CNTRY
BELJANSKI	MIRKO		46 BD DE PORT ROYAL	PARIS		FR
4335239 - POLYRIBONUCLEOTIDES CAPABLE OF PROMOTING THE GENESIS OF LEUCOCYTES AND BLOOD PLATELETS						
BRANEMARK	PER	I.	S-431 39	MO LNDAL		SE
4330891 - ELEMENT FOR IMPLANTATION IN BODY TISSUE, PARTICULARLY BONE TISSUE						
CERDA OLMEDO	ENRIQUE		C/AVD. REINA MERCEDES, 27, 6+2	SEVILLA		ES
4318987 - +62 -CAROTENE PRODUCING STRAINS OF THE FUNGUS PHYCOMYCES BLAKESLEENUS						
DEBABOV	VLADIMIR	G.	ULITSA MIKLUKHO-MAKLAYA, 43, K	MOSCOW		SU
4321325 - PROCESS FOR PRODUCING L-THREONINE						
FUDENBERG	H.	HUGH	9 SECOND AVE.	ISLE OF PALMS	SC	29451
4322274 - METHOD OF DIAGNOSING CYSTIC FIBROSIS PATIENTS AND ASYMPTOMATIC CARRIER OF THE CYSTIC FIBROSIS GENE						
GOLDENBERG	MILTON	D.	11837 GAINSBOROUGH RD.	POTOMAC	MD	20854
4331647 - TUMOR LOCALIZATION AND THERAPY WITH LABELED ANTIBODY FRAGMENTS SPECIFIC TO TUMOR-ASSOCIATED MARKERS						
4348376 - TUMOR LOCALIZATION AND THERAPY WITH LABELED ANTI-CEA ANTIBODY						
4361544 - TUMOR LOCALIZATION AND THERAPY WITH LABELED ANTIBODIES SPECIFIC TO INTRACELLULAR TUMOR-ASSOCIATED MARKERS						
GORDON	ROBERT	T.	4936 W. ESTES	SKOKIE	IL	60076
4359453 - ATHEROSCLEROSIS TREATMENT METHOD						
KHURGES	EVGENY	M.	ULITSA TIKHVINSKAYA, 1/13, KV.	MOSCOW		SU
4321325 - PROCESS FOR PRODUCING L-THREONINE						
LOPEZ CALDERON	ISABEL		C/VIRGEN DE LA ANTIGUA, 20, 1+	SEVILLA		ES
4318987 - +62 -CAROTENE PRODUCING STRAINS OF THE FUNGUS PHYCOMYCES BLAKESLEENUS						
MITANI	IKUSABURO		46-19, NARASHINODAI 5-CHOME	FUNABASHI-SHI, CHIBA		JP
4323496 - INNOXIOUS INTERFERON-INDUCING SUBSTANCE, INDUCING AGENT AND PROCESS FOR PRODUCING SAME						
MURILLO ARAUJO	FRANCISCO	J.	C/TURDETANIA, 3-1+20 C	SEVILLA		ES
4318987 - +62 -CAROTENE PRODUCING STRAINS OF THE FUNGUS PHYCOMYCES BLAKESLEENUS						
NEVILLE	DAVID	M. JR.	9624 PARKWOOD DR.	BETHESDA	MD	20014
4359457 - ANTI THY 1.2 MONOCLONAL ANTIBODY-RICIN HYBRID UTILIZED AS A TUMOR SUPPRESSANT						
PIECZENIK	GEORGE		515 WEST END AVE.	NEW YORK	NY	10024
4359535 - AUTONOMOUSLY REPLICATING DNA CONTAINING INSERTED DNA SEQUENCES						
ROSENBERG	RALPH	A.	124 JOHNSON ST., APT. 1-B	HIGHLAND PARK	NJ	08904
4332893 - PROCESS FOR THE PRODUCTION OF AN INSULIN-PRODUCING CELL LINE OF PANCREATIC BETA CELLS						
RUBIN	HARVEY		2560 FIRST AVE.	SAN DIEGO	CA	92103
4358586 - DETECTION AND ISOLATION OF ENDORPHIN MRNA USING A SYNTHETIC OLIGODEOXYNUCLEOTIDE						
SHANBROM	EDWARD		2252 LIANE LA.	SANTA ANA	CA	92705
4315919 - DEPYROGENATION PROCESS						
SING	EDMOND	L.	3860 CHEVIOT PL.	INDIANAPOLIS	IN	46226
4351904 - BLEND OF NORMAL AND MUTANT +I STREPTOCOCCUS DIACETILACTIS						

INVENTORS OF INDIVIDUALLY OWNED PATENTS (ALPHA LISTING)

INVENTOR NAME			STREET	CITY	ST	ZIP/CNTRY
SKURKOVICH	SIMON	V.	261 CONGRESSIONAL LA., +190 70	ROCKVILLE	MD	20852
4362155 - METHOD AND APPARATUS FOR THE TREATMENT OF AUTOIMMUNE AND ALLERGIC DISEASES						
SOKOLOV	ALEXANDR	K.	LEVSHINSKY, MALY PEREULOK, 14/	MOSCOW		SU
4321325 - PROCESS FOR PRODUCING L-THREONINE						
SUGAAR	STEPHEN		21 LOUIS ST.	STATEN ISLAND	NY	10304
4343895 - ENCAPSULATED ANTIGENIC TUMOR SPECIFIC SUBSTANCES AND METHODS FOR DETECTING CANCER USING SAID SUBSTANCES						
THURESSON AF EKENSTABO			S-412 53	GO TEBORG		SE
4330891 - ELEMENT FOR IMPLANTATION IN BODY TISSUE, PARTICULARLY BONE TISSUE						
WILSON	GREGORY	B.	2706 CAMERON BLVD.	ISLE OF PALMS	SC	29451
4322274 - METHOD OF DIAGNOSING CYSTIC FIBROSIS PATIENTS AND ASYMPTOMATIC CARRIER OF THE CYSTIC FIBROSIS GENE						
YOULE	RICHARD	J.	9629 OLD SPRING RD.	KENSINGTON	MD	20795
4359457 - ANTI THY 1.2 MONOCLONAL ANTIBODY-RICIN HYBRID UTILIZED AS A TUMOR SUPPRESSANT						
ZHDANOVA	NELLI	I.	LENINGRADSKOE SHOSSE, 112, KOR	MOSCOW		SU
4321325 - PROCESS FOR PRODUCING L-THREONINE						

BIOTECHNOLOGY 1982 UPDATE - ENZYMES PER SE

1980-82 AVERAGES

PERCENT GROWTH	31.94
PERCENT FOREIGN	47.50
PERCENT CORPORATE OWNED	90.00
PERCENT GOVERNMENT OWNED	1.56
PERCENT U.S. OWNED OF FOREIGN	10.53
1980-82 XR/OR	2.56

DEFINITIONS

PERCENT GROWTH = 1980-82 PATENTS/1973-82 PATENTS X 100.

PERCENT FOREIGN = 1980-82 U.S. PATENTS WITH A FOREIGN RESIDENT INVENTOR/1980-82 PATENTS X 100

PERCENT CORPORATE OWNED = 1980-82 U.S. PATENTS ASSIGNED TO CORPORATIONS/1980-82 PATENTS X 100.

PERCENT GOVERNMENT OWNED = 1980-82 U.S. PATENTS ASSIGNED TO THE U.S. AND FOREIGN GOVERNMENTS/1980-82 PATENTS X 100.

PERCENT U.S. OWNED OF FOREIGN = 1980-82 U.S. PATENTS WITH A FOREIGN RESIDENT INVENTOR THAT ARE ASSIGNED TO A U.S. ORGANIZATION/1980-82 U.S. PATENTS WITH A FOREIGN RESIDENT INVENTOR X 100.

1980-82 XR/OR = 1980-82 U.S. PATENTS WITH A CROSS REFERENCE DESIGNATION/1980-82 U.S. PATENTS WITH AN ORIGINAL PRIMARY DESIGNATION.

BIOTECHNOLOGY 1982 UPDATE - ENZYMES PER SE

PATENT ACTIVITY (1/63-12/82) BY DATE OF PATENT GRANT

	NUMBER OF PATENTS															
	63-68	1969	1970	1971	1972	1973	1974	1975	1976	1977	1978	1979	1980	1981	1982	TOTAL
TOTAL	238	48	40	88	117	99	110	119	103	129	91	31	86	121	113	1533
U.S. ORIGIN	149	37	20	49	49	49	40	44	36	58	47	13	44	64	60	759
FOREIGN ORIGIN	89	11	20	39	68	50	70	75	67	71	44	18	42	57	53	774
JAPAN	35	6	7	16	35	33	37	33	30	23	16	8	23	27	27	356
WEST GERMANY	12		5	10	12	3	7	12	10	10	7	4	6	7	9	114
UNITED KINGDOM	11	2	1		8	3	6	11	2	18	4	2	5	5	7	85
FRANCE	8		2	2	2	4	4	8	8	4	2			2		46
DENMARK	4			1	3	1	2	1	5	3	2			3	3	28
ITALY	2		1	1		2	1	1	2	3	3	1	1	5		23
NETHERLANDS	1			2	1	1	6	1		2	1	1	2	3	1	22
SWITZERLAND	5	1					3	1	1		4	2	1	1	1	20
CANADA	3	1	3		2	1		3	2	2	1					18
SWEDEN	4		1	1	2	1	2						2	1		14
BELGIUM		1		3	1	1		1	1	1			1			10
U.S.S.R.							1		1		3			2	1	8
S. AFRICA	1									2	1					4
AUSTRALIA				1				1	1							3
AUSTRIA	1								1	1						3
SPAIN	1									1					1	3
FINLAND										1			1			2
IRELAND					1										1	2
ISRAEL				1										1		2
MEXICO								1	1							2
BULGARIA															2	2
CZECHOSLOVAKIA									1							1
NEW ZEALAND	1															1
ROMANIA							1									1
HONG KONG				1												1
CHINA P.REP.					1											1
HUNGARY								1								1
IRAN									1							1
U.S. ORIGIN	149	37	20	49	49	49	40	44	36	58	47	13	44	64	60	759
U.S. CORP. OWNED	125	30	19	44	44	39	35	34	32	54	42	11	40	54	51	654
U.S. GOVT. OWNED	5	2		2	1	5		4	1	1	3			2	1	27
U.S. INDIV. OWNED	17	5		3	4	4	4	6	3	3	2	1	4	8	7	71
FOREIGN OWNED	2		1			1	1					1			1	7
FOREIGN ORIGIN	89	11	20	39	68	50	70	75	67	71	44	18	42	57	53	774
U.S. OWNED	4	1	2	8	8	3	6	5	6	5	4	2	4	7	5	70
FOREIGN OWNED	85	10	18	31	60	47	64	70	61	66	40	16	38	50	48	704
FOREIGN CORP.	74	10	14	30	50	45	60	66	51	56	36	15	35	46	45	633
FOREIGN GOVT.								2	1					1	1	5
FOREIGN INDIV.	11		4	1	10	2	4	2	9	10	4	1	3	3	2	66

BIOTECHNOLOGY 1982 UPDATE - ENZYMES PER SE

PATENT ACTIVITY (PATENTS GRANTED 1/67-12/82) BY DATE OF PATENT APPLICATION

	NUMBER OF PATENTED APPLICATIONS															
	PRE 69	1969	1970	1971	1972	1973	1974	1975	1976	1977	1978	1979	1980	1981	1982	TOTAL
TOTAL	246	92	81	97	91	82	96	112	111	67	67	124	89	20	1	1376
U.S. ORIGIN	148	43	32	42	36	32	38	46	58	30	37	60	45	14		661
FOREIGN ORIGIN	98	49	49	55	55	50	58	66	53	37	30	64	44	6	1	715
JAPAN	33	30	26	34	26	19	28	24	19	14	16	34	22	5		330
WEST GERMANY	23	5	9	2	6	8	11	8	7	9	3	6	9	1	1	108
UNITED KINGDOM	7	5	4	3	6	7	5	15	4	5	2	8	5			76
FRANCE	6	1	3	5	5	5	4	8	1	2		1				41
DENMARK	8	3			2	3	1		4	1	1	3	2			28
ITALY	2			2	1	1	2	3	4		5	1				21
NETHERLANDS	2	1		4	3	1		1	1	2	1	4	1			21
SWITZERLAND	4			2	3		1	1	4	2		1				18
CANADA	4		3			2	2		4							15
SWEDEN	2	1	2	2		1					1	2				11
BELGIUM	3	2		1	1		1		1		1					10
U.S.S.R.						1	1	1	1	1		2	1			8
S. AFRICA	1							1	1	1						4
AUSTRALIA	1					1	1									3
AUSTRIA	1						1	1								3
SPAIN								1					1			2
FINLAND									1			1				2
IRELAND			1										1			2
ISRAEL	1											1				2
MEXICO						1		1								2
BULGARIA													2			2
CZECHOSLOVAKIA									1							1
NEW ZEALAND																
ROMANIA					1											1
HONG KONG		1														1
CHINA P.REP.			1													1
HUNGARY					1											1
IRAN								1								1
U.S. ORIGIN	148	43	32	42	36	32	38	46	58	30	37	60	45	14		661
U.S. CORP. OWNED	128	39	26	34	32	27	30	43	55	20	31	55	39	13		572
U.S. GOVT. OWNED	8	2		4		1	4	1	1	2	1		1	1		26
U.S. INDIV. OWNED	9	2	5	3	4	4	4	2	2	7	5	5	4			56
FOREIGN OWNED	3		1	1						1			1			7
FOREIGN ORIGIN	98	49	49	55	55	50	58	66	53	37	30	64	44	6	1	715
U.S. OWNED	10	5	5	7	5	4	4	5	3	4		10	5			67
FOREIGN OWNED	88	44	44	48	50	46	54	61	50	33	30	54	39	6	1	648
FOREIGN CORP.	79	40	38	45	49	41	47	47	47	31	28	48	38	6	1	585
FOREIGN GOVT.						1	1	1				2				5
FOREIGN INDIV.	9	4	6	3	1	4	6	13	3	2	2	4	1			58

ORGANIZATIONAL PATENTING

ABBOTT LABORATORIES
4326033 - MODIFIED UROKINASE HAVING EXTENDED ACTIVITY AND METHOD OF MAKING
4341865 - DETERMINATION OF THYROXINE BINDING GLOBULIN

A. E. STALEY MANUFACTURING COMPANY
4310628 - FRUCTOSE PRODUCTION

AKZONA INCORPORATED
4331761 - STABILIZATION OF PEROXIDASE

AMANO PHARMACEUTICAL CO., LTD.
4360591 - PROCESS FOR THE DETERMINATION OF FREE FATTY ACIDS

APPLIED MEDICAL DEVICES, INC.
4363319 - READY-TO-USE BANDAGE INCORPORATING A COAGULANT COMPOSITION AND METHOD OF PREPARING SAME

ASAHI KASEI KOGYO KABUSHIKI KAISHA
4317882 - PRODUCTION OF PLASMINOGEN ACTIVATOR
4328314 - PROCESS FOR PRODUCING PLASMINOGEN ACTIVATOR

BASF AKTIENGESELLSCHAFT
4315002 - SOLID PHARMACEUTICAL OR DIAGNOSTIC AGENT CONTAINING DEXTRAN AND ITS PREPARATION

BECKMAN INSTRUMENTS INC.
4309502 - ENZYMATIC ASSAY FOR GLYCEROL AND TRIGLYCERIDES AND A REAGENT FOR USE THEREIN
4325832 - ENZYME REFERENCE COMPOSITION

BETHESDA RESEARCH LABORATORY
4342833 - IMMOBILIZED RESTRICTION ENDONUCLEASES

BOEHRINGER MANNHEIM G.M.B.H.
4330620 - METHOD AND REAGENT FOR THE DETERMINATION OF CREATINE KINASE MB
4334023 - PROCESS FOR OBTAINING CHOLESTEROL OXIDASE
4343903 - PROCESS FOR OBTAINING CHOLESTEROL ESTERASE FROM MICRO-ORGANISMS
4360596 - PROCESS FOR THE PREPARATION OF CHOLESTEROL ESTERASE
4366249 - STORAGE STABLE CHOLESTEROL OXIDASE COMPOSITIONS

COLLABORATIVE RESEARCH, INCORPORATED
4342826 - IMMUNOASSAY PRODUCTS AND METHODS

COMPANIA ESPANOLA DE PETROLEOS, S.A.
4351903 - PROCESS FOR OBTAINING GLUCOSE-ISOMERASE

CORNELL RESEARCH FOUNDATION INC.
4335210 - METHOD OF PRODUCING L-CYSTEINE
4348479 - RECOVERY OF PROTEINACEOUS MATERIAL HAVING REDUCED NUCLEIC ACID LEVELS

CORNING GLASS WORKS
4350659 - STABILIZATION OF SENSITIVE BIOLOGICALLY ACTIVE INTERMEDIATE METABOLITES SUCH AS FOLIC ACID DERIVATIVES

CPC INTERNATIONAL INC.
4309505 - PROCESS FOR THE PRODUCTION OF FRUCTOSE TRANSFERASE ENZYME
4343902 - PRODUCTION OF IMMOBILIZED GLUCOSE ISOMERASE

DAINIPPON PHARMACEUTICAL CO. LTD.
4364926 - NOVEL ALKALINE PROTEASE M/3 \ METHOD FOR THE PREPARATION THEREOF AND DENTAL CARIES-PROPHYLACTIC COMPOSITION CO NTAINING THE SAME

ORGANIZATIONAL PATENTING

DE FORENEDE BRYGGERIER A/S
4340675 - PROCESS FOR RECOVERING CU,ZN-SUPEROXIDE DISMUTASE FROM YEAST
4341867 - PROCESS FOR RECOVERING ENZYMES FROM BLOOD

EASTMAN KODAK COMPANY
4322496 - INHIBITION OF LACTATE OXIDASE

ELI LILLY AND COMPANY
4316955 - ENZYMATIC DEESTERIFICATION OF CEPHALOSPORIN METHYL ESTERS

ENZYME CENTER, INC.
4330626 - METHOD OF PREPARING HIGH-ACTIVITY, LOW-BACTERIA, UREASE ENZYME

FUJIZOKI PHARMACEUTICAL CO., LTD.
4346174 - PROCESS FOR ISOLATING SUPEROXIDE DISMUTASE FROM RED BLOOD CELLS

GREEN CROSS CORPORATION
4313938 - INTERFERON INDUCER AND METHOD OF PREPARING SAME
4361652 - METHOD FOR STABILIZING PLASMINOGEN
4361653 - PLASMINOGEN PREPARATIONS

IMPERIAL CHEMICAL INDUSTRIES LIMITED
4323649 - BIOTRANSFORMATIONS USING METHANE-UTILIZING BACTERIA

INSTITUTE PO MICROBIOLOGIA
4317883 - METHOD FOR OBTAINING OF GLUCOSE ISOMERASE
4348481 - METHOD OF OBTAINING GLUCOSE ISOMERASE

KABUSHIKI KAISHA HAYASHIBARA SEIBUTSU KAGAKU KENKYUJO
4338398 - IMMOBILIZATION OF STARCH DEGRADING ENZYMES

KERNFORSCHUNGSANLAGE JULICH GMBH
4350767 - METHOD FOR ISOLATING AND PURIFYING ENZYMES FROM A CRUDE ENZYME SOLUTION

KYOWA HAKKO KOGYO CO., LTD
4335213 - PROCESS FOR THE PREPARATION OF GALACTOSE OXIDASE
4341868 - METHOD AND TEST COMPOSITION FOR THE DETERMINATION OF THE SUBSTRATE FOR XANTHINE OXIDASE

LEAF PROTEINS, INC.
4347324 - PROCESS FOR ISOLATION OF PROTEINS FROM PLANT LEAVES

LIFELINE PRODUCTS, INC.
4318989 - STARCH-DEGRADING ENZYMES FROM +I CLADOSPORIUM RESINAE

MASSACHUSETTS INSTITUTE OF TECHNOLOGY
4332899 - PROCESS FOR PRODUCING MALTASE
4341869 - PROCESS FOR PRODUCING HEPARINASE
4357422 - METHOD OF ENHANCING INTERFERON PRODUCTION

MAX-PLANCK-GESELLSCHAFT ZUR FORDERUNG DER WISSENSCHAFTEN E.V
4331764 - SEMINAL PLASMA RIBONUCLEASE AND METHOD FOR ITS RECOVERY

MEDAC GESELLSCHAFT FUR KLINISCHE SPEZIALPRAPARATE MBH
4347311 - ENZYME IMMUNOASSAY FOR DETERMINING ANTIGEN SPECIFIC ANTIBODIES AND TEST KIT FOR CARRYING OUT THIS ASSAY

ORGANIZATIONAL PATENTING

MERCK + CO., INC.
4335101 - ORAL HYGIENE ENZYMES AND METHOD FOR PREPARATION

MILES LABORATORIES INC.
4310626 - INTERFERENCE-RESISTANT COMPOSITION, DEVICE AND METHOD FOR DETERMINING A PEROXIDATIVELY ACTIVE SUBSTANCE IN A T EST SAMPLE
4318980 - HETEROGENOUS SPECIFIC BINDING ASSAY EMPLOYING A CYCLING REACTANT AS LABEL
4318982 - FMN-LABELED SPECIFIC BINDING ASSAY
4318983 - FAD-LABELED SPECIFIC BINDING ASSAY MONITORED WITH APOGLUTATHIONE REDUCTASE OR APOLIPOAMIDE DEHYDROGENASE

4331590 - +62 -GALACTOSYL-UMBELLIFERONE-LABELED PROTEIN AND POLYPEPTIDE CONJUGATES
4340668 - HEME-LABELED SPECIFIC BINDING ASSAY
4348480 - PROCESS FOR PRODUCING GLUCOSE ISOMERASE
4348482 - PROCESS FOR DECREASING THE THERMAL STABILITY OF MICROBIAL RENNET
4355103 - NOVEL STRAIN OF +I BACILLUS LICHENIFORMIS \ USEFUL IN THE PRODUCTION OF GLUCOSE ISOMERASE AND METHOD OF SCREEN ING BACILLUS MUTANTS FOR ABILITY TO PRODUCE GLUCOSE ISOMERASE IN THE ABSENCE OF XYLOSE
4355105 - GLUTARALDEHYDE/POLYETHYLENIMINE IMMOBILIZATION OF WHOLE MICROBIAL CELLS
4362818 - ACYLATION OF +I MUCOR PUSILLUS +B MICROBIAL RENNET ENZYME
4366243 - STABILIZATION OF GLUCOSE OXIDASE APOENZYME

MILLER BREWING COMPANY
4355047 - METHOD OF PREPARING A LOW CALORIE BEER
4355110 - PREPARATION OF DEBRANCHING ENZYME FROM RICE FOR PRODUCING A LOW CALORIE BEER

MITSUBISHI GAS-CHEMICAL COMPANY, INC.
4328312 - PROCESS FOR PRODUCTION OF PEROXIDASE

MITSUBISHI PETROCHEMICAL CO., LTD.
4315988 - THERMOPHILIC COLLAGENASES, THERMOPHILIC BACTERIA CAPABLE OF PRODUCING THERMOPHILIC COLLAGENASES, AND PROCESS F OR PRODUCING SAID COLLAGENASES
4326029 - PROCESS FOR PRODUCTION OF L-ASPARTIC ACID

MITSUI TOATSU CHEMICALS INC.
4335209 - PROCESS FOR PREPARATION OF L-TRYPTOPHAN BY ENZYME

NABISCO, INC.
4347322 - CHROMATOGRAPHIC PROCESS FOR ENZYME PURIFICATION

NATIONAL RESEARCH DEVELOPMENT CORPORATION
4332895 - THERMAL STABLE BETA-GALACTOSIDASE

NIPPON SODA COMPANY LIMITED
4321363 - ADSORBENT FOR UROKINASE CONTAINING AGAROSE

NITTO CHEMICAL INDUSTRY CO., LTD.
4343899 - PROCESS FOR PRODUCING STABLE AQUEOUS SOLUTION OF ACRYLAMIDE OR METHACRYLAMIDE

NOVO INDUSTRI A/S
4357357 - THERMAL DESTABILIZATION OF MICROBIAL RENNET

PFIZER INC.
4329429 - LACTASE PREPARATION

PHARMACIA DIAGNOSTICS AB
4337309 - METHOD OF DETERINING THE CONCENTRATION OF PANCREATIC AND SALIVARY +60 -AMYLASE IN BODY FLUIDS

PRESIDENT AND FELLOWS OF HARVARD COLLEGE
4336336 - FUSED GENE AND METHOD OF MAKING AND USING SAME

ORGANIZATIONAL PATENTING

PUBLIC HEALTH LABORATORY SERVICE, CENTER FOR APPLIED MICROBI
4342827 - PRODUCTION OF ENZYMES

RESEARCH CORPORATION
4347243 - ACID SOLUBLE, PEPSIN RESISTANT PLATELET AGGREGATING MATERIAL

RESEARCH TRIANGLE INSTITUTE
4347312 - DETECTION OF ANTIBIOTICS IN MILK

R. J. REYNOLDS TOBACCO COMPANY
4323651 - THERMOSTABLE LACTASE DERIVED FROM BACILLUS

SANRAKU-OCEAN CO., LTD.
4317881 - PROCESS FOR PRODUCING CYCLODEXTRINS

SLOAN-KETTERING INSTITUTE FOR CANCER RESEARCH
4333734 - DIAGNOSTIC DEVICE FOR FECAL OCCULT BLOOD AND METHOD OF USE

STANDARD BRANDS INCORPORATED
4321323 - CARBOHYDRATE PROCESS
4321324 - PROCESS FOR MAKING GLUCOSONE

SYVA COMPANY
4318846 - NOVEL ETHER SUBSTITUTED FLUORESCEIN POLYAMINO ACID COMPOUNDS AS FLUORESCERS AND QUENCHERS
4328311 - ENZYME-AMINOGLYCOSIDE CONJUGATES
4341866 - ANTIENZYME TERMINATION IN ENZYME IMMUNOASSAYS
4351760 - NOVEL ALKYL SUBSTITUTED FLUORESCENT COMPOUNDS AND POLYAMINO ACID CONJUGATES

TAKEDA CHEMICAL INDUSTRIES LTD.
4312943 - METHOD FOR ENZYME IMMUNOASSAY OF PANCREATIC GLUCAGON

TECHNICON INSTRUMENTS CORPORATION
4339533 - STABILIZATION OF CREATINE KINASE (CK) AND ITS APPLICATION AS A REFERENCE STANDARD

TOYO JOZO COMPANY, LTD.
4331763 - PROCESS FOR PRODUCTION OF ASCORBATE OXIDASE
4346173 - PROCESS FOR THE PRODUCTION OF ACYL-COENZYME A OXIDASE
4347323 - GLYCEROL KINASE FROM +I STREPTOMYCES CANUS
4357425 - PROCESS FOR PRODUCING L-AMINO ACID OXIDASE

UNITED KINGDOM ATOMIC ENERGY AUTHORITY
4318990 - SEPARATION OF PROTEASES FROM FLUIDS

UNITED STATES OF AMERICA, NAVY
4328313 - METHOD OF PRODUCING A PLAQUE DISPERSING ENZYME

UNITIKA LTD.
4331762 - +I BACILLUS STEAROTHERMOPHILUS +B STRAIN UK 788 AND PROCESS FOR PRODUCING A USEFUL ENZYME
4349631 - PROCESS FOR PRODUCING HEAT-RESISTANT ACETATE KINASE

UNIVERSITY OF MIAMI
4323647 - STERIC HINDRANCE ENZYME IMMUNOASSAY

UNIVERSITY OF SOUTHERN CALIFORNIA
4311790 - RADIOENZYMATIC METHOD FOR ASSAYING 3,4-DIHYDROXYPHENYLGLYCOL

ORGANIZATIONAL PATENTING

UNIVERSITY PATENTS, INC.
4340676 - METHOD OF CRYSTALLIZING RIBULOSE, 1,5-BISPHOSPHATE CARBOXYLASE/OXYGENASE FROM PHOTOSYNTHETIC ORGANISMS, PARTICULARLY PLANT LEAVES

WISCONSIN ALUMNI RESEARCH FOUNDATION
4330621 - ASSAY FOR AMINOGLYCOSIDES
4352885 - PREPARATION OF A NOVEL NADP LINKED ALCOHOL-ALDEHYDE/KETONE OXIDOREDUCTASE FROM THERMOPHILIC ANAEROBIC BACTERIA FOR ANALYTICAL AND COMMERCIAL USE

YAMASU SHOYU KABUSHIKI KAISHA
4350761 - METHOD OF AND REAGENTS FOR QUANTITATIVE ANALYSIS OF CYCLIC NUCLEOTIDES

YELLOW SPRINGS INSTRUMENT COMPANY, INC.
4356074 - SUBSTRATE SPECIFIC GALACTOSE OXIDASE ENZYME ELECTRODES

***

INVENTORS OF INDIVIDUALLY OWNED PATENTS (ALPHA LISTING)

INVENTOR NAME			STREET	CITY	ST	ZIP/CNTRY
BERNSTEIN	LARRY	H.	2800 GASLIGHT LA., EAST	MOBILE	AL	36609
4311791 - AUTOMATED KINETIC DETERMINATION OF LACTATE DEHYDROGENASE ISOENZYMES IN SERUM						
COLE	MORTON	S.	2506 IVY LA.	DECATUR	IL	62521
4320151 - ANTISTALING BAKING COMPOSITION						
GUGGENHEIM	BERNHARD		25 ALFRED-ESCHERSTRASSE	ZURICH		CH
4353891 - MUTANASE						
HOUCK	JOHN	C.	4020 28TH PL.	SEATTLE	WA	98199
4329430 - ENZYME MIXTURE						
JOHAL	SARJIT		1411 S. 11TH ST. +190 2	LINCOLN	NE	86502
4334024 - PREPARATION AND CRYSTALLIZATION OF FRACTION I PROTEIN FROM PLANT SOURCES						
KIYASU	JOHN	Y.	94 MEADOW ST.	GARDEN CITY	NY	11530
4338396 - HEART ATTACK SCREENING METHOD AND PROCESS						
KLEIN	GEROLD	K.	MEREPOINT RD.	BRUNSWICK	ME	04011
4329430 - ENZYME MIXTURE						
MAXIMENKO	ALEXANDR	V.	ULITSA BALTIISKAYA, 10, KORPUS	MOSCOW		SU
4349630 - HEAT-RESISTANT WATER SOLUBLE UROKINASE DERIVATIVE						
MODROVICH	IVAN	E.	1043 MESA DR.	CAMARILLO	CA	93010
4310624 - STABILIZED LIQUID COENZYME COMPOSITIONS FOR DIAGNOSTIC DETERMINATIONS						
MODROVICH	IVAN	E.	591 BEVERLY DR.	CAMARILLO	CA	93010
4310625 - STABILIZED LIQUID ENZYME COMPOSITIONS FOR DIAGNOSTIC DETERMINATIONS						
MUHLEMANN	HANS-RUDOLF		8 BEUSTWEG	ZURICH		CH
4353891 - MUTANASE						

BIOTECHNOLOGY 1982 UPDATE - IMMOBILIZED ENZYMES

1980-82 AVERAGES

PERCENT GROWTH	35.46
PERCENT FOREIGN	53.37
PERCENT CORPORATE OWNED	90.45
PERCENT GOVERNMENT OWNED	6.18
PERCENT U.S. OWNED OF FOREIGN	11.58
1980-82 XR/OR	3.45

DEFINITIONS

PERCENT GROWTH = 1980-82 PATENTS/1973-82 PATENTS X 100.

PERCENT FOREIGN = 1980-82 U.S. PATENTS WITH A FOREIGN RESIDENT INVENTOR/1980-82 PATENTS X 100

PERCENT CORPORATE OWNED = 1980-82 U.S. PATENTS ASSIGNED TO CORPORATIONS/1980-82 PATENTS X 100.

PERCENT GOVERNMENT OWNED = 1980-82 U.S. PATENTS ASSIGNED TO THE U.S. AND FOREIGN GOVERNMENTS/1980-82 PATENTS X 100.

PERCENT U.S. OWNED OF FOREIGN = 1980-82 U.S. PATENTS WITH A FOREIGN RESIDENT INVENTOR THAT ARE ASSIGNED TO A U.S. ORGANIZATION/1980-82 U.S. PATENTS WITH A FOREIGN RESIDENT INVENTOR X 100.

1980-82 XR/OR = 1980-82 U.S. PATENTS WITH A CROSS REFERENCE DESIGNATION/1980-82 U.S. PATENTS WITH AN ORIGINAL PRIMARY DESIGNATION.

BIOTECHNOLOGY 1982 UPDATE - IMMOBILIZED ENZYMES

PATENT ACTIVITY (1/63-12/82) BY DATE OF PATENT GRANT

	NUMBER OF PATENTS															
	63-68	1969	1970	1971	1972	1973	1974	1975	1976	1977	1978	1979	1980	1981	1982	TOTAL
TOTAL	13	2	6	14	26	28	59	44	59	49	51	34	59	67	52	563
U.S. ORIGIN	7	2	6	9	14	18	38	22	31	24	23	17	27	29	27	294
FOREIGN ORIGIN	6			5	12	10	21	22	28	25	28	17	32	38	25	269
JAPAN	2				1	2	3	7	11	4	10	7	12	18	7	84
UNITED KINGDOM				3	4	2	7	8	2	4	3	2	3	2	7	47
WEST GERMANY	1			1		3	3	2	4	3	5	2	8	8	3	43
FRANCE							2		2	5	1	2	4	2	2	20
SWEDEN					1	1	4	1	2	5		1		1	1	17
SWITZERLAND					1		1		1	1	4	1	4			13
ISRAEL	2			1	3			1	1	1	1			1		11
CZECHOSLOVAKIA	1								1		2			1	1	6
ITALY						1			1	1	1				2	6
DENMARK								1	1	1	1			2		6
NETHERLANDS					1	1	1	1					1	1		6
AUSTRALIA					1				1							2
CANADA												1		1		2
BELGIUM												1		1		2
HUNGARY								1							1	2
U.S.S.R.															1	1
AUSTRIA									1							1
U.S. ORIGIN	7	2	6	9	14	18	38	22	31	24	23	17	27	29	27	294
U.S. CORP. OWNED	5	1	4	9	12	14	34	20	29	19	16	10	25	26	27	251
U.S. GOVT. OWNED					1	3	1	1	1	1	5	2	1	1		17
U.S. INDIV. OWNED	2		1		1		3	1	1	4	2	3	1	2		21
FOREIGN OWNED		1	1			1						2				5
FOREIGN ORIGIN	6			5	12	10	21	22	28	25	28	17	32	38	25	269
U.S. OWNED				1	4			1	2		2	1	5	5	1	22
FOREIGN OWNED	6			4	8	10	21	21	26	25	26	16	27	33	24	247
FOREIGN CORP.	3			4	8	8	20	19	19	22	24	16	25	30	17	215
FOREIGN GOVT.									2		1		2	2	5	12
FOREIGN INDIV.	3					2	1	2	5	3	1			1	2	20

BIOTECHNOLOGY 1982 UPDATE - IMMOBILIZED ENZYMES

PATENT ACTIVITY (PATENTS GRANTED 1/67-12/82) BY DATE OF PATENT APPLICATION

	NUMBER OF PATENTED APPLICATIONS															
	PRE 69	1969	1970	1971	1972	1973	1974	1975	1976	1977	1978	1979	1980	1981	1982	TOTAL
TOTAL	30	11	23	23	44	57	55	41	55	54	54	58	41	6		552
U.S. ORIGIN	22	5	13	14	26	34	26	19	31	26	23	25	20	4		288
FOREIGN ORIGIN	8	6	10	9	18	23	29	22	24	28	31	33	21	2		264
JAPAN	1	2	1	1	2	7	9	7	7	13	10	13	9	1		83
UNITED KINGDOM	4	1	4	2	8	4	5	3	3	2	2	6	3			47
WEST GERMANY			2	2	3	6	1	3	2	6	9	4	4			42
FRANCE					2		3	3	3	2	4	2	1			20
SWEDEN			1	2	1	3	4	3			2	1				17
SWITZERLAND		1			1	1		1	4	3	2					13
ISRAEL	3		1			1	2		1			1				9
CZECHOSLOVAKIA							1	1	1			2				5
ITALY		1					1		2				1	1		6
DENMARK						1	1		1	1		2				6
NETHERLANDS		1	1	1			1				1	1				6
AUSTRALIA				1				1								2
CANADA											1		1			2
BELGIUM										1		1				2
HUNGARY					1								1			2
U.S.S.R.						1	1	1	1	1		2	2			9
AUSTRIA							1									1
U.S. ORIGIN	22	5	13	14	26	34	26	19	31	26	23	25	20	4		288
U.S. CORP. OWNED	18	5	10	12	23	32	23	14	24	19	20	23	20	4		247
U.S. GOVT. OWNED			3	1	1		1	1	5	3	2					17
U.S. INDIV. OWNED	2				2	2	2	4	2	2	1	2				19
FOREIGN OWNED	2			1						2						5
FOREIGN ORIGIN	8	6	10	9	18	23	29	22	24	28	31	33	21	2		264
U.S. OWNED	2	2	1			1	1	1	2	3	2	6	1			22
FOREIGN OWNED	6	4	9	9	18	22	28	21	22	25	29	27	20	2		242
FOREIGN CORP.	6	3	9	8	16	19	24	16	21	23	28	22	16	2		213
FOREIGN GOVT.							2	1	1	1	1	5	1			12
FOREIGN INDIV.	1			1	2	3	2	4		1			3			17

ORGANIZATIONAL PATENTING

AGENCY OF INDUSTRIAL SCIENCE & TECHNOLOGY
4332904 - BIOCHEMICAL TREATMENT BY MICROORGANIC METHOD

AIRCO INC.
4317879 - GLUCOSE ANALYZER MEMBRANE CONTAINING IMMOBILIZED GLUCOSE OXIDASE

AKZONA INCORPORATED
4357142 - GLASS SUPPORT COATED WITH SYNTHETIC POLYMER FOR BIOPROCESS
4363634 - GLASS SUPPORT COATED WITH SYNTHETIC POLYMER FOR BIOPROCESS

BATTELLE DEVELOPMENT CORPORATION
4327181 - AEROBIC SUBMERGED FERMENTATION OF SPORULATING, ECTOMYCORRHIZAL FUNGI

BETHESDA RESEARCH LABORATORY
4342833 - IMMOBILIZED RESTRICTION ENDONUCLEASES

CESKOSLOVENSKA AKADEMIE VED
4332694 - THREE-DIMENSIONAL CARRIER OF INORGANIC POROUS MATERIAL-REACTIVE POLYMER AND A METHOD FOR ITS PREPARATION

COLLABORATIVE RESEARCH, INCORPORATED
4342826 - IMMUNOASSAY PRODUCTS AND METHODS

CORDIS LABORATORIES, INC.
4317810 - WAFFLE-LIKE MATRIX FOR IMMUNOASSAY AND PREPARATION THEREOF

CORNING GLASS WORKS
4321141 - METHOD FOR PROCESSING WASTE

CPC INTERNATIONAL INC.
4343902 - PRODUCTION OF IMMOBILIZED GLUCOSE ISOMERASE

CURATORS OF THE UNIVERSITY OF MISSOURI
4355108 - ETHANOL PRODUCTION WITH AN IMMOBILIZED CELL REACTOR

DAMON CORPORATION
4352883 - ENCAPSULATION OF BIOLOGICAL MATERIAL

DEGUSSA AKTIENGESELLSCHAFT
4326031 - PROCESS FOR THE CONTINUOUS ENZYMATIC CHANGE OF WATER SOLUBLE +6O -KETOCARBOXYLIC ACIDS INTO THE CORRESPONDING +6O -HYDROXYCARBOXYLIC ACIDS

DUKE UNIVERSITY INC.
4343715 - IMMOBILIZED HEMOGLOBIN, AND PROCESSES FOR EXTRACTING OXYGEN FROM FLUIDS USING THE SAME

GAMBRO AG
4311789 - METHOD FOR SAMPLING AND MEASURING THE CONTENT OF A LOW-MOLECULAR WEIGHT COMPOUND IN A COMPLEX FLUID MEDIUM

GIST-BROCADES N.V.
4320194 - PROCESS FOR THE PRODUCTION OF CARRIER PARTICLES FROM YEAST CELLS AND FOR PRODUCING DIAGNOSTIC AGENTS THEREFROM AND TEST KITS CONTAINING SUCH AGENTS

INSTITUT NATIONAL DE LA SANTE ET DE LA RECHERCHE MEDICALE
4355102 - AGGLUTINATION TESTS FOR DETECTING INFLUENZA VIRUSES, AND REAGENTS FOR CARRYING OUT THESE TESTS

ITALFARMACO S.P.A.
4338401 - IMMOBILIZATION OF ENZYMES

ORGANIZATIONAL PATENTING

KABUSHIKI KAISHA HAYASHIBARA SEIBUTSU KAGAKU KENKYUJO
4338398 - IMMOBILIZATION OF STARCH DEGRADING ENZYMES

KURARAY CO., LTD.
4352884 - CARRIER HAVING ACRYLATE COPOLYMER COATING FOR IMMOBILIZATION OF BIOACTIVE MATERIALS

MEDAC GESELLSCHAFT FUR KLINISCHE SPEZIALPRAPARATE MBH
4347311 - ENZYME IMMUNOASSAY FOR DETERMINING ANTIGEN SPECIFIC ANTIBODIES AND TEST KIT FOR CARRYING OUT THIS ASSAY

MIDWEST RESEARCH INSTITUTE
4324858 - STABILIZATION OF CHOLINESTERASE, DETECTOR KIT USING STABILIZED CHOLINESTERASE, AND METHODS OF MAKING AND USING THE SAME

MILES LABORATORIES INC.
4337313 - IMMOBILIZATION OF BIOCATALYSTS
4347320 - IMMOBILIZATION OF MICROORGANISMS IN GELLED CARRAGEENAN
4355105 - GLUTARALDEHYDE/POLYETHYLENIMINE IMMOBILIZATION OF WHOLE MICROBIAL CELLS

NABISCO, INC.
4347322 - CHROMATOGRAPHIC PROCESS FOR ENZYME PURIFICATION

NATIONAL RESEARCH DEVELOPMENT CORPORATION
4332895 - THERMAL STABLE BETA-GALACTOSIDASE

NIPPON MINING CO., LTD.
4339536 - PROCESS FOR THE PREPARATION OF LONG-CHAIN DICARBOXYLIC ACIDS BY FERMENTATION

NITTO CHEMICAL INDUSTRY CO., LTD.
4343900 - PROCESS FOR THE PRODUCTION OF ACRYLAMIDE USING MICROORGANISM

P C U K PRODUITS CHIMIQUES UGINE KUHLMANN
4318988 - PROCESS FOR BIOLOGICAL DENITRIFICATION OF EFFLUENTS

PURDUE RESEARCH FOUNDATION
4321327 - PREPARATION OF SPHERICAL SHAPED MYCELIAL PELLETS

RADELKIS ELEKTROKEMIAI MUSZERGYARTO SZOVETKEZET
4354913 - MOLECULE SELECTIVE ENZYME ELECTRODE

SORIN BIOMEDICA S.P.A.
4356267 - ENZYME IMMOBILIZATION IN CELLULOSIC HOLLOW FIBRES

STANDARD BRANDS INCORPORATED
4321323 - CARBOHYDRATE PROCESS
4321324 - PROCESS FOR MAKING GLUCOSONE

SYVA COMPANY
4328311 - ENZYME-AMINOGLYCOSIDE CONJUGATES

TALRES DEVELOPMENT (N.A.) N.V.
4359531 - PRODUCTION OF ISOMALTULOSE

TANABE SEIYAKU CO. LTD.
4350765 - METHOD FOR PRODUCING ETHANOL WITH IMMOBILIZED MICROORGANISM

TECHNICON INSTRUMENTS CORPORATION
4338395 - METHOD FOR THE ANALYSIS OF TRIGLYCERIDES

BIOTECHNOLOGY 1982 UPDATE - IMMOBILIZED ENZYMES

ORGANIZATIONAL PATENTING

UNITED KINGDOM ATOMIC ENERGY AUTHORITY
4318990 - SEPARATION OF PROTEASES FROM FLUIDS
4323650 - IMMOBILIZATION OF BIOLOGICALLY ACTIVE SUBSTANCES IN A POROUS SUPPORT
4335017 - COMPOSITE MATERIALS COMPRISING DEFORMABLE XEROGEL WITHIN THE PORES OF PARTICULATE RIGID SUPPORTS USEFUL IN CHR OMATOGRAPHY
4336161 - COMPOSITE MATERIALS COMPRISING DEFORMABLE XEROGEL WITHIN THE PORES OF PARTICULATE RIGID SUPPORTS USEFUL IN CHR OMATOGRAPHY

UOP INC.
4337172 - ENHANCED IMMOBILIZATION OF A GLUCOSE ISOMERASE
4343901 - MAGNETIC SUPPORT MATRIX FOR ENZYME IMMOBILIZATION

WARNER-LAMBERT COMPANY
4357311 - SUBSTRATE FOR IMMUNOASSAY AND MEANS OF PREPARING SAME

WISCONSIN ALUMNI RESEARCH FOUNDATION
4310554 - PREPARATION OF CHEESE WITH MICROENCAPSULATED ENZYMES

W. R. GRACE + CO.
4312946 - PREPARATION AND USE OF ENZYMES BOUND TO POLYURETHANE
4342834 - ENZYMES BOUND TO POLYURETHANE

***

BIOTECHNOLOGY 1982 UPDATE - IMMOBILIZED ENZYMES

INVENTORS OF INDIVIDUALLY OWNED PATENTS (ALPHA LISTING)

INVENTOR NAME	STREET	CITY	ST	ZIP/CNTRY
KLEIN JOACHIM	SCHAPENBRUCH 14	3300 BRAUNSCHWEIG		DE
4334027 - PREPARATION OF IMMOBILIZED ENZYMATICALLY-ACTIVE SUBSTANCE				
MAXIMENKO ALEXANDR V.	ULITSA BALTIISKAYA, 10, KORPUS	MOSCOW		SU
4349630 - HEAT-RESISTANT WATER SOLUBLE UROKINASE DERIVATIVE				
WAGNER FRITZ	HOHE WIESE 2	3300 BRAUNSCHWEIG-ST		DE
4334027 - PREPARATION OF IMMOBILIZED ENZYMATICALLY-ACTIVE SUBSTANCE				

BIOTECHNOLOGY 1982 UPDATE - TISSUE CULTURE

1980-82 AVERAGES

PERCENT GROWTH	42.68
PERCENT FOREIGN	24.76
PERCENT CORPORATE OWNED	80.00
PERCENT GOVERNMENT OWNED	6.67
PERCENT U.S. OWNED OF FOREIGN	15.38
1980-82 XR/OR	2.09

DEFINITIONS

PERCENT GROWTH = 1980-82 PATENTS/1973-82 PATENTS X 100.

PERCENT FOREIGN = 1980-82 U.S. PATENTS WITH A FOREIGN RESIDENT INVENTOR/1980-82 PATENTS X 100

PERCENT CORPORATE OWNED = 1980-82 U.S. PATENTS ASSIGNED TO CORPORATIONS/1980-82 PATENTS X 100.

PERCENT GOVERNMENT OWNED = 1980-82 U.S. PATENTS ASSIGNED TO THE U.S. AND FOREIGN GOVERNMENTS/1980-82 PATENTS X 100.

PERCENT U.S. OWNED OF FOREIGN = 1980-82 U.S. PATENTS WITH A FOREIGN RESIDENT INVENTOR THAT ARE ASSIGNED TO A U.S. ORGANIZATION/1980-82 U.S. PATENTS WITH A FOREIGN RESIDENT INVENTOR X 100.

1980-82 XR/OR = 1980-82 U.S. PATENTS WITH A CROSS REFERENCE DESIGNATION/1980-82 U.S. PATENTS WITH AN ORIGINAL PRIMARY DESIGNATION.

BIOTECHNOLOGY 1982 UPDATE - TISSUE CULTURE

PATENT ACTIVITY (1/63-12/82) BY DATE OF PATENT GRANT

	NUMBER OF PATENTS															
	63-68	1969	1970	1971	1972	1973	1974	1975	1976	1977	1978	1979	1980	1981	1982	TOTAL
TOTAL	25	8	7	8	8	17	17	26	20	32	17	12	36	29	40	302
U.S. ORIGIN	16	8	4	7	7	12	10	20	14	24	14	7	26	25	28	222
FOREIGN ORIGIN	9		3	1	1	5	7	6	6	8	3	5	10	4	12	80
UNITED KINGDOM	4		2			1	4	1	1	2	1	1	2	1	3	23
JAPAN			1	1				1	2	1	1	1	4		4	16
WEST GERMANY	2						1	2	1			1	1	2		10
FRANCE						1		1		4					1	7
CANADA	1				1	1						1	1		2	7
SWITZERLAND						1	1	1	1				1		1	6
SWEDEN	1						1		1	1			1			5
AUSTRIA												1		1	1	3
CZECHOSLOVAKIA	1															1
ITALY						1										1
INDIA											1					1
U.S. ORIGIN	16	8	4	7	7	12	10	20	14	24	14	7	26	25	28	222
U.S. CORP. OWNED	14	7	3	5	7	7	7	16	10	19	13	3	20	18	24	173
U.S. GOVT. OWNED		1		1		1	2	1		3		1	3	2		15
U.S. INDIV. OWNED	2		1	1		3	1	3	4	2	1	2	3	5	4	32
FOREIGN OWNED						1						1				2
FOREIGN ORIGIN	9		3	1	1	5	7	6	6	8	3	5	10	4	12	80
U.S. OWNED			1	1		1	2		2	1	2		2		2	14
FOREIGN OWNED	9		2		1	4	5	6	4	7	1	5	8	4	10	66
FOREIGN CORP.	6		2		1	2	3	5	4	6	1	5	8	2	9	54
FOREIGN GOVT.														1		1
FOREIGN INDIV.	3					2	2	1		1				1	1	11

BIOTECHNOLOGY 1982 UPDATE - TISSUE CULTURE

PATENT ACTIVITY (PATENTS GRANTED 1/67-12/82) BY DATE OF PATENT APPLICATION

	NUMBER OF PATENTED APPLICATIONS															
	PRE 69	1969	1970	1971	1972	1973	1974	1975	1976	1977	1978	1979	1980	1981	1982	TOTAL
TOTAL	29	9	8	12	11	21	24	28	21	17	36	32	33	3		284
U.S. ORIGIN	21	6	5	10	8	13	21	20	14	10	27	26	25	3		209
FOREIGN ORIGIN	8	3	3	2	3	8	3	8	7	7	9	6	8			75
UNITED KINGDOM	4	1		1	1	2	2	1	2	2	1	2	2			21
JAPAN	2					1	1	1	3		4	2	2			16
WEST GERMANY	1		1		1	1		1		1	2		1			9
FRANCE			1			1		3	1	1						7
CANADA	1	2								2			2			7
SWITZERLAND					1	2		1			1		1			6
SWEDEN				1		1		1				1				4
AUSTRIA										1	1	1				3
CZECHOSLOVAKIA																
ITALY			1													1
INDIA									1							1
U.S. ORIGIN	21	6	5	10	8	13	21	20	14	10	27	26	25	3		209
U.S. CORP. OWNED	16	4	4	9	5	9	16	16	13	6	20	23	18	2		161
U.S. GOVT. OWNED	1	1		1	2	1	1	2		1	3	1	1			15
U.S. INDIV. OWNED	4	1	1			3	4	2	1	3	3	2	6	1		31
FOREIGN OWNED					1						1					2
FOREIGN ORIGIN	8	3	3	2	3	8	3	8	7	7	9	6	8			75
U.S. OWNED	2	1		1		1	1	2	2	1	1		2			14
FOREIGN OWNED	6	2	3	1	3	7	2	6	5	6	8	6	6			61
FOREIGN CORP.	6	2	1	1	2	5	2	6	4	6	8	5	4			52
FOREIGN GOVT.												1				1
FOREIGN INDIV.			2		1	2			1				2			8

ORGANIZATIONAL PATENTING

ALBERT EINSTEIN COLLEGE OF MEDICINE OF YESHIVA UNIVERSITY
4326027 - ANTIGLOBULIN CONTROL CELLS
4352887 - METHOD AND ARTICLE FOR CULTURING DIFFERENTIATED CELLS

ASAHI KASEI KOGYO KABUSHIKI KAISHA
4317882 - PRODUCTION OF PLASMINOGEN ACTIVATOR
4328314 - PROCESS FOR PRODUCING PLASMINOGEN ACTIVATOR

BECTON, DICKINSON AND COMPANY
4317886 - MULTIPLE INTERIOR SURFACE ROLLER BOTTLE
4330216 - GRAVITY-INDUCED STIRRING DEVICE FOR ROTATING LIQUID CONTAINERS
4337104 - METHOD FOR MANUFACTURING A ROLLER BOTTLE

BRISTOL-MYERS COMPANY
4350768 - METHOD FOR PREPARING SINGLE CELL SUSPENSION

BRITISH PETROLEUM COMPANY LIMITED
4326034 - FERMENTATION PROCESS FOR PRODUCING HIGHER PLANT CELLS

CHEMAP AG
4310630 - ARRANGEMENT FOR CULTIVATING CELLS OF ANIMAL AND HUMAN TISSUES
4311798 - METHOD OF AND AN ARRANGEMENT FOR CULTIVATING CELLS OF ANIMAL AND HUMAN TISSUES

DAMON CORPORATION
4352883 - ENCAPSULATION OF BIOLOGICAL MATERIAL

DATA PACKAGING CORPORATION
4349632 - TISSUE CULTURE CLUSTER DISH

G. D. SEARLE & CO.
4343904 - PROCESS AND APPARATUS FOR GROWING ANIMAL CELLS

INTERNATIONAL INSTITUTE OF DIFFERENTIATION LIMITED
4316962 - NOVEL CELL LINE

MASSACHUSETTS INSTITUTE OF TECHNOLOGY
4352880 - DIFFUSION BIOASSAY FOR THE QUANTITATIVE DETERMINATION OF MUTAGENICITY
4357422 - METHOD OF ENHANCING INTERFERON PRODUCTION

MONSANTO COMPANY
4335215 - METHOD OF GROWING ANCHORAGE-DEPENDENT CELLS

MORINAGA MILK INDUSTRY CO. LTD.
4342828 - METHOD FOR PRODUCING SUBSTANCE CAPABLE OF STIMULATING DIFFERENTIATION AND PROLIFERATION OF HUMAN GRANULOPOIETI
C STEM CELLS

NATIONAL RESEARCH DEVELOPMENT CORPORATION
4350683 - ANTIBODY PRODUCTION FROM HYBRID CELL LINE

OLYMPUS OPTICAL CO., LTD.
4339537 - METHOD OF CULTURING BIOLOGICAL SUBSTANCES

ORTHO PHARMACEUTICAL CORPORATION
4361549 - COMPLEMENT-FIXING MONOCLONAL ANTIBODY TO HUMAN T CELLS, AND METHODS OF PREPARING SAME
4361550 - COMPLEMENT-FIXING MONOCLONAL ANTIBODY TO HUMAN SUPPRESSOR T CELLS AND METHODS OF PREPARING SAME
4363799 - MONOCLONAL ANTIBODY TO HUMAN T CELLS, AND METHODS FOR PREPARING SAME
4364932 - MONOCLONAL ANTIBODY TO HUMAN CYTOTOXIC AND SUPPRESSOR T CELLS AND METHODS OF PREPARING SAME

ORGANIZATIONAL PATENTING

ORTHO PHARMACEUTICAL CORPORATION (CONTINUED)
4364933 - MONOCLONAL ANTIBODY TO A HUMAN THYMOCYTE ANTIGEN AND METHODS OF PREPARING SAME
4364935 - MONOCLONAL ANTIBODY TO A HUMAN PROTHYMOCYTE ANTIGEN AND METHODS OF PREPARING SAME
4364936 - MONOCLONAL ANTIBODY TO A HUMAN MONOCYTE ANTIGEN AND METHODS OF PREPARING SAME
4364937 - MONOCLONAL ANTIBODY TO A HUMAN T CELL ANTIGEN AND METHODS OF PREPARING SAME

REGENTS OF UNIVERSITY OF CALIFORNIA
4323555 - METHOD OF PROTECTING CATTLE AND SHEEP AGAINST BOVINE LEUKEMIA VIRUS AND VACCINES FOR USE THEREIN
4326026 - METHOD FOR FRACTIONATING CELLS

RESEARCH CORPORATION
4350687 - PLATELET DERIVED CELL GROWTH FACTOR

RUSH-PRESBYTERIAN-ST. LUKE'S MEDICAL CENTER
4356261 - ANTI-INVASION FACTOR CONTAINING CULTURES

UNITED STATES OF DEPARTMENT OF HEALTH & HUMAN SERVICES
4328309 - METHOD FOR PRODUCING TRIPDIOLIDE, TRIPTOLIDE AND CELASTROL

WISTAR INSTITUTE
4334016 - HUMAN OSTEOGENIC SARCOMA CELL LINE AND USE THEREOF FOR IMMUNOFLUORESCENT ANTIBODY TEST

***

INVENTORS OF INDIVIDUALLY OWNED PATENTS (ALPHA LISTING)

INVENTOR NAME			STREET	CITY	ST	ZIP/CNTRY
BAKER	FRASER	L.	6227 ORANGE ST.	LOS ANGELES	CA	90048
4321330 - TISSUE CULTURE DEVICE						
CARVER	JOSEPH	L.	310 VIA LIDO NORD	NEWPORT BEACH	CA	92663
4334028 - FLASK						
ROSENBERG	RALPH	A.	124 JOHNSON ST., APT. 1-B	HIGHLAND PARK	NJ	08904
4332893 - PROCESS FOR THE PRODUCTION OF AN INSULIN-PRODUCING CELL LINE OF PANCREATIC BETA CELLS						
SEFTON	MICHAEL	V.	21 PRINCE CHARLES DR.	TORONTO, ONTARIO		CA
4353888 - ENCAPSULATION OF LIVE ANIMAL CELLS						
SONG	JOHN	S.	2827 SHERIDAN PL.	EVANSTON	IL	60201
4358908 - PLANT CULTURE VESSEL						

1980-82 AVERAGES

PERCENT GROWTH	35.77
PERCENT FOREIGN	41.94
PERCENT CORPORATE OWNED	98.92
PERCENT GOVERNMENT OWNED	0.00
PERCENT U.S. OWNED OF FOREIGN	25.64
1980-82 XR/OR	1.38

DEFINITIONS

PERCENT GROWTH = 1980-82 PATENTS/1973-82 PATENTS X 100.

PERCENT FOREIGN = 1980-82 U.S. PATENTS WITH A FOREIGN RESIDENT INVENTOR/1980-82 PATENTS X 100

PERCENT CORPORATE OWNED = 1980-82 U.S. PATENTS ASSIGNED TO CORPORATIONS/1980-82 PATENTS X 100.

PERCENT GOVERNMENT OWNED = 1980-82 U.S. PATENTS ASSIGNED TO THE U.S. AND FOREIGN GOVERNMENTS/1980-82 PATENTS X 100.

PERCENT U.S. OWNED OF FOREIGN = 1980-82 U.S. PATENTS WITH A FOREIGN RESIDENT INVENTOR THAT ARE ASSIGNED TO A U.S. ORGANIZATION/1980-82 U.S. PATENTS WITH A FOREIGN RESIDENT INVENTOR X 100.

1980-82 XR/OR = 1980-82 U.S. PATENTS WITH A CROSS REFERENCE DESIGNATION/1980-82 U.S. PATENTS WITH AN ORIGINAL PRIMARY DESIGNATION.

BIOTECHNOLOGY 1982 UPDATE - STARCH HYDROLYSATES

PATENT ACTIVITY (1/63-12/82) BY DATE OF PATENT GRANT

	NUMBER OF PATENTS															
	63-68	1969	1970	1971	1972	1973	1974	1975	1976	1977	1978	1979	1980	1981	1982	TOTAL
TOTAL	39	6	10	18	29	16	34	26	29	33	21	8	26	40	27	362
U.S. ORIGIN	31	4	9	13	15	6	19	13	16	18	11	6	13	24	17	215
FOREIGN ORIGIN	8	2	1	5	14	10	15	13	13	15	10	2	13	16	10	147
JAPAN	5	2	1	3	12	9	11	6	8	7	6	1	3	9	5	88
UNITED KINGDOM	1				1		3	2		3	1		2		2	15
WEST GERMANY	2			1		1		1	1	1			1	1		9
FRANCE								1	2	1			1	2	1	8
DENMARK				1				2		1			2		2	8
BELGIUM								1		2			4			7
SWEDEN					1				1					1		3
SWITZERLAND											2					2
AUSTRALIA											1					1
AUSTRIA							1									1
ISRAEL														1		1
ITALY														1		1
NETHERLANDS														1		1
CANADA												1				1
EAST GERMANY									1							1
U.S. ORIGIN	31	4	9	13	15	6	19	13	16	18	11	6	13	24	17	215
U.S. CORP. OWNED	27	4	8	12	14	4	19	12	14	13	9	6	13	24	16	195
U.S. GOVT. OWNED				1	1	1			1	1	1					6
U.S. INDIV. OWNED	3		1			1		1		3	1				1	11
FOREIGN OWNED	1								1	1						3
FOREIGN ORIGIN	8	2	1	5	14	10	15	13	13	15	10	2	13	16	10	147
U.S. OWNED	1			1			1	1	2	2	1		4	5	1	19
FOREIGN OWNED	7	2	1	4	14	10	14	12	11	13	9	2	9	11	9	128
FOREIGN CORP.	6	2	1	3	13	10	13	11	11	13	7	2	9	11	9	121
FOREIGN GOVT.																
FOREIGN INDIV.	1			1	1		1	1			2					7

BIOTECHNOLOGY 1982 UPDATE - STARCH HYDROLYSATES

PATENT ACTIVITY (PATENTS GRANTED 1/67-12/82) BY DATE OF PATENT APPLICATION

	NUMBER OF PATENTED APPLICATIONS															
	PRE 69	1969	1970	1971	1972	1973	1974	1975	1976	1977	1978	1979	1980	1981	1982	TOTAL
TOTAL	54	24	21	21	16	24	31	25	24	20	18	32	27	5		342
U.S. ORIGIN	43	10	9	11	8	14	16	14	16	11	8	18	18	3		199
FOREIGN ORIGIN	11	14	12	10	8	10	15	11	8	9	10	14	9	2		143
JAPAN	9	11	10	9	6	2	9	7	2	4	2	8	5	2		86
UNITED KINGDOM		2			2	2	1	2	1	1	1	1	1			14
WEST GERMANY	2		1			2	1			1	1					8
FRANCE						1	2	1		1	1	1	1			8
DENMARK		1				2			1	2			2			8
BELGIUM							1	1	1		2	2				7
SWEDEN			1				1				1					3
SWITZERLAND									2							2
AUSTRALIA									1							1
AUSTRIA				1												1
ISRAEL												1				1
ITALY											1					1
NETHERLANDS												1				1
CANADA											1					1
EAST GERMANY						1										1
U.S. ORIGIN	43	10	9	11	8	14	16	14	16	11	8	18	18	3		199
U.S. CORP. OWNED	39	10	8	9	7	14	14	10	13	11	8	18	17	3		181
U.S. GOVT. OWNED	1		1	1			1		2							6
U.S. INDIV. OWNED	2			1	1		1	2	1				1			9
FOREIGN OWNED	1							2								3
FOREIGN ORIGIN	11	14	12	10	8	10	15	11	8	9	10	14	9	2		143
U.S. OWNED	1	2					2	3	1		2	7	1			19
FOREIGN OWNED	10	12	12	10	8	10	13	8	7	9	8	7	8	2		124
FOREIGN CORP.	8	11	12	10	7	9	13	8	5	9	8	7	8	2		117
FOREIGN GOVT.																
FOREIGN INDIV.	2	1			1	1			2							7

ORGANIZATIONAL PATENTING

A. E. STALEY MANUFACTURING COMPANY
4310628 - FRUCTOSE PRODUCTION

ALUMINUM COMPANY OF AMERICA
4359532 - METHOD FOR GLUCOSE EXTRACTION FROM GREEN CROPS

BIO RESEARCH CENTER CO., LTD.
4314854 - METHOD FOR THE TREATMENT OF CELLULOSIC SUBSTANCES WITH HYDROGEN PEROXIDE

CPC INTERNATIONAL INC.
4317880 - PROCESS FOR THE PRODUCTION OF FRUCTOSE POLYMERS AND HIGH FRUCTOSE SYRUPS
4335207 - PROCESS FOR THE PRODUCTION OF HIGH FRUCTOSE SYRUPS AND ETHANOL
4343902 - PRODUCTION OF IMMOBILIZED GLUCOSE ISOMERASE
4356262 - PROCESS FOR THE PRODUCTION OF HIGH FRUCTOSE SYRUPS AND ETHANOL

KABUSHIKI KAISHA HAYASHIBARA SEIBUTSU KAGAKU KENKYUJO
4338398 - IMMOBILIZATION OF STARCH DEGRADING ENZYMES

MERCK + CO., INC.
4340673 - PROCESS OF PRODUCING MODIFIED GLUCANS AS ANTI-CARIES AGENT

MILES LABORATORIES INC.
.348480 - PROCESS FOR PRODUCING GLUCOSE ISOMERASE
4355103 - NOVEL STRAIN OF +I BACILLUS LICHENIFORMIS \ USEFUL IN THE PRODUCTION OF GLUCOSE ISOMERASE AND METHOD OF SCREEN ING BACILLUS MUTANTS FOR ABILITY TO PRODUCE GLUCOSE ISOMERASE IN THE ABSENCE OF XYLOSE
4355105 - GLUTARALDEHYDE/POLYETHYLENIMINE IMMOBILIZATION OF WHOLE MICROBIAL CELLS

NATIONAL DISTILLERS AND CHEMICAL CORPORATION
4330625 - LIQUEFYING AQUEOUS STARCH SLURRY FOLLOWED BY SACCHARIFICATION WITH ION EXCHANGE RESIN
4356266 - PROCESS FOR THE HYDROLYSIS OF STARCH AND FERMENTABLE HYDROLYSATES OBTAINED THEREFROM

NATIONAL RESEARCH DEVELOPMENT CORPORATION
4332895 - THERMAL STABLE BETA-GALACTOSIDASE

NOVO INDUSTRI A/S
4316956 - FERMENTATION PROCESS
4335208 - SACCHARIFICATION OF STARCH HYDROLYSATES

PURDUE RESEARCH FOUNDATION
4332894 - CONVERSION OF GUAR GUM TO GEL-FORMING POLYSACCHARIDES BY THE ACTION OF +60 -GALACTOSIDASE

RICH PRODUCTS CORPORATION
4356195 - FRUIT JUICES HAVING A DEPRESSED FREEZING POINT

ROQUETTE FRERES
4346116 - NON-CARIOGENIC HYDROGENATED STARCH HYDROLYSATE, PROCESS FOR THE PREPARATION AND APPLICATIONS OF THIS HYDROLYSA TE

SANRAKU-OCEAN CO., LTD.
4317881 - PROCESS FOR PRODUCING CYCLODEXTRINS

STANDARD BRANDS INCORPORATED
4321323 - CARBOHYDRATE PROCESS
4321324 - PROCESS FOR MAKING GLUCOSONE

STANDARD OIL COMPANY (INDIANA)
4338399 - PROCESS FOR RECOVERING HYDROCARBONS FROM HYDROCARBON-CONTAINING BIOMASS

ORGANIZATIONAL PATENTING

TALRES DEVELOPMENT (N.A.) N.V.
4359531 - PRODUCTION OF ISOMALTULOSE

TORAY INDUSTRIES INC.
4347316 - PROCESS FOR ISOMERIZING GLUCOSE TO FRUCTOSE

***

INVENTORS OF INDIVIDUALLY OWNED PATENTS (ALPHA LISTING)

INVENTOR NAME	STREET	CITY	ST	ZIP/CNTRY
KEIM CARROLL R.	50 GLENBROOK RD.	STAMFORD	CT	06902

4361651 - PROCESS FOR MAKING FERMENTABLE SUGARS AND HIGH-PROTEIN PRODUCTS

1980-82 AVERAGES

PERCENT GROWTH	27.60
PERCENT FOREIGN	75.47
PERCENT CORPORATE OWNED	92.45
PERCENT GOVERNMENT OWNED	0.00
PERCENT U.S. OWNED OF FOREIGN	5.00
1980-82 XR/OR	1.12

DEFINITIONS

PERCENT GROWTH = 1980-82 PATENTS/1973-82 PATENTS X 100.

PERCENT FOREIGN = 1980-82 U.S. PATENTS WITH A FOREIGN RESIDENT INVENTOR/1980-82 PATENTS X 100

PERCENT CORPORATE OWNED = 1980-82 U.S. PATENTS ASSIGNED TO CORPORATIONS/1980-82 PATENTS X 100.

PERCENT GOVERNMENT OWNED = 1980-82 U.S. PATENTS ASSIGNED TO THE U.S. AND FOREIGN GOVERNMENTS/1980-82 PATENTS X 100.

PERCENT U.S. OWNED OF FOREIGN = 1980-82 U.S. PATENTS WITH A FOREIGN RESIDENT INVENTOR THAT ARE ASSIGNED TO A U.S. ORGANIZATION/1980-82 U.S. PATENTS WITH A FOREIGN RESIDENT INVENTOR X 100.

1980-82 XR/OR = 1980-82 U.S. PATENTS WITH A CROSS REFERENCE DESIGNATION/1980-82 U.S. PATENTS WITH AN ORIGINAL PRIMARY DESIGNATION.

BIOTECHNOLOGY 1982 UPDATE - AMINO ACIDS

PATENT ACTIVITY (1/63-12/82) BY DATE OF PATENT GRANT

	NUMBER OF PATENTS															
	63-68	1969	1970	1971	1972	1973	1974	1975	1976	1977	1978	1979	1980	1981	1982	TOTAL
TOTAL	77	11	18	23	37	26	30	38	15	13	14	3	17	18	18	358
U.S. ORIGIN	25	6	2	4	6	4	4	6	1	3	3		3	6	4	77
FOREIGN ORIGIN	52	5	16	19	31	22	26	32	14	10	11	3	14	12	14	281
JAPAN	47	5	14	19	28	22	22	28	7	5	9	2	10	5	10	233
WEST GERMANY	3		1		1		2	1		1			1	3		13
FRANCE	1				1				4			1	1		1	9
ITALY					1				1	2	1			1	2	8
UNITED KINGDOM	1							2		1			1			5
U.S.S.R.										1			1	2	1	5
SWEDEN							1	1	1							3
NETHERLANDS									1		1					2
ISRAEL														1		1
ARGENTINA			1													1
CANADA							1									1
U.S. ORIGIN	25	6	2	4	6	4	4	6	1	3	3		3	6	4	77
U.S. CORP. OWNED	25	6	2	4	6	4	3	6	1	2	3		3	6	4	75
U.S. GOVT. OWNED																
U.S. INDIV. OWNED										1						1
FOREIGN OWNED							1									1
FOREIGN ORIGIN	52	5	16	19	31	22	26	32	14	10	11	3	14	12	14	281
U.S. OWNED	2		1				1						2			6
FOREIGN OWNED	50	5	15	19	31	22	25	32	14	10	11	3	12	12	14	275
FOREIGN CORP.	46	5	12	18	31	22	24	31	13	9	11	3	11	10	13	259
FOREIGN GOVT.	1								1							2
FOREIGN INDIV.	3		3	1			1	1		1			1	2	1	14

BIOTECHNOLOGY 1982 UPDATE - AMINO ACIDS

PATENT ACTIVITY (PATENTS GRANTED 1/67-12/82) BY DATE OF PATENT APPLICATION

	NUMBER OF PATENTED APPLICATIONS															
	PRE 69	1969	1970	1971	1972	1973	1974	1975	1976	1977	1978	1979	1980	1981	1982	TOTAL
TOTAL	92	18	16	22	20	27	24	15	12	17	11	15	17	4		310
U.S. ORIGIN	23	1	1	2	2	6	4	2	4	3	4	3	3	1		59
FOREIGN ORIGIN	69	17	15	20	18	21	20	13	8	14	7	12	14	3		251
JAPAN	64	16	15	18	14	17	17	7	5	10	5	5	10	3		206
WEST GERMANY	2	1			3				1			3	1			11
FRANCE				1		2	1	1		2			1			8
ITALY	1						1	1	2		1	1	1			8
UNITED KINGDOM	1					1	1	1		1						5
U.S.S.R.						2	2	3	2	2	1	5	6			23
SWEDEN				1		1		1								3
NETHERLANDS								1		1						2
ISRAEL												1				1
ARGENTINA	1															1
CANADA					1											1
U.S. ORIGIN	23	1	1	2	2	6	4	2	4	3	4	3	3	1		59
U.S. CORP. OWNED	23	1	1	2	2	5	4	2	3	3	4	3	3	1		57
U.S. GOVT. OWNED																
U.S. INDIV. OWNED									1							1
FOREIGN OWNED						1										1
FOREIGN ORIGIN	69	17	15	20	18	21	20	13	8	14	7	12	14	3		251
U.S. OWNED	2				1						2					5
FOREIGN OWNED	67	17	15	20	17	21	20	13	8	14	5	12	14	3		246
FOREIGN CORP.	61	17	14	20	15	21	19	12	8	14	4	10	13	3		231
FOREIGN GOVT.	1						1									2
FOREIGN INDIV.	5		1		2			1			1	2	1			13

ORGANIZATIONAL PATENTING

ABBOTT LABORATORIES
4309342 - ANTIBACTERIAL PEPTIDES

AGENCE NATIONALE DE VALORISATION DE LA RECHERCHE (ANVAR)
4366250 - PREPARATION PROCESS OF OPTICALLY ACTIVE +60 -AMINATED ACIDS BY BIOLOGICAL HYDROLYSIS OF NITRILES

AJINOMOTO COMPANY INCORPORATED
4334020 - METHOD OF PRODUCING L-GLUTAMIC ACID BY FERMENTATION
4346169 - METHOD FOR PRODUCTION OF L-ARGININE BY FERMENTATION
4346170 - METHOD FOR PRODUCING L-LYSINE BY FERMENTATION
4347317 - METHOD FOR PRODUCING L-GLUTAMIC ACID BY FERMENTATION
4347318 - METHOD FOR PRODUCING L-THREONINE BY FERMENTATION

ASAHI KASEI KOGYO KABUSHIKI KAISHA
4349627 - PROCESS FOR PRODUCING L-TRYPTOPHAN OR DERIVATIVES THEREOF USING A MICROORGANISM
4360594 - PROCESS FOR PRODUCING L-TRYPTOPHAN OR DERIVATIVES THEREOF USING MICROORGANISMS

CORNELL RESEARCH FOUNDATION INC.
4335210 - METHOD OF PRODUCING L-CYSTEINE

ELI LILLY AND COMPANY
4366147 - ANTIBIOTIC A-7413 AND PROCESS FOR PREPARATION THEREOF

E.N.I. ENTE NAZIONALE IDROCARBURI
4332905 - PROCESS FOR PREPARING CARBAMYL DERIVATIVES OF +60 -HYDROXY ACIDS AND THE CORRESPONDING +60 -HYDROXY ACIDS

MITSUBISHI PETROCHEMICAL CO., LTD.
4326029 - PROCESS FOR PRODUCTION OF L-ASPARTIC ACID

MITSUI TOATSU CHEMICALS INC.
4335209 - PROCESS FOR PREPARATION OF L-TRYPTOPHAN BY ENZYME

SHOWA DENKO KABUSHIKI KAISHA
4363875 - PROCESS FOR PRODUCING L-TRYPTOPHAN, AND A PURE CULTURE OF A MICROORGANISM STRAIN USED IN SAID PROCESS

SNAM PROGETTI S.P.A.
4312948 - ENZYMIC MICROBIOLOGICAL PROCESS FOR PRODUCING OPTICALLY ACTIVE AMINOACIDS STARTING FROM HYDANTOINS AND/OR RACE MIC CARBAMOYL DERIVATIVES

W. R. GRACE + CO.
4329427 - FERMENTATIVE PREPARATION OF L-ISOLEUCINE

***

INVENTORS OF INDIVIDUALLY OWNED PATENTS (ALPHA LISTING)

INVENTOR NAME	STREET	CITY	ST	ZIP/CNTRY
DEBABOV VLADIMIR G.	ULITSA MIKLUKHO-MAKLAYA, 43, K	MOSCOW		SU

4321325 - PROCESS FOR PRODUCING L-THREONINE

APPENDIX A

EXPLANATORY NOTES

Patent Front Pages

This brief explanation of the information available from a U.S. Patent is designed for the person unfamiliar with patents.

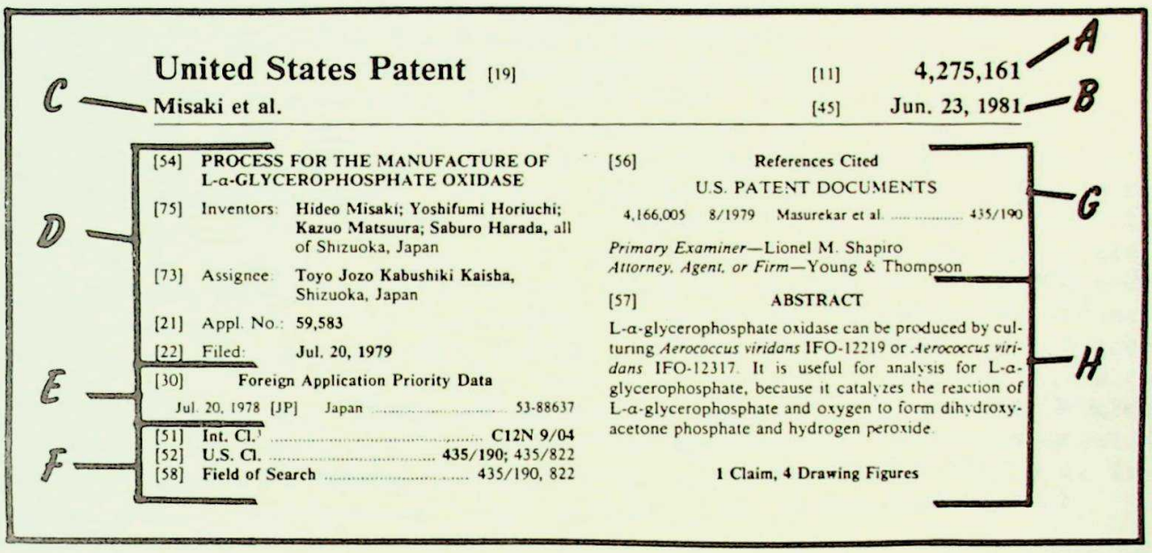

United States Patent [19]

Misaki et al.

[11] **4,275,161**

[45] **Jun. 23, 1981**

[54] **PROCESS FOR THE MANUFACTURE OF L-α-GLYCEROPHOSPHATE OXIDASE**

[75] Inventors: **Hideo Misaki; Yoshifumi Horiuchi; Kazuo Matsuura; Saburo Harada,** all of Shizuoka, Japan

[73] Assignee: **Toyo Jozo Kabushiki Kaisha,** Shizuoka, Japan

[21] Appl. No.: **59,583**

[22] Filed: **Jul. 20, 1979**

[30] **Foreign Application Priority Data**

Jul. 20, 1978 [JP] Japan 53-88637

[51] **Int. Cl.**[3] **C12N 9/04**

[52] **U.S. Cl.** **435/190; 435/822**

[58] **Field of Search** 435/190, 822

[56] **References Cited**

U.S. PATENT DOCUMENTS

4,166,005 8/1979 Masurekar et al. 435/190

Primary Examiner—Lionel M. Shapiro

Attorney, Agent, or Firm—Young & Thompson

[57] **ABSTRACT**

L-α-glycerophosphate oxidase can be produced by culturing *Aerococcus viridans* IFO-12219 or *Aerococcus viridans* IFO-12317. It is useful for analysis for L-α-glycerophosphate, because it catalyzes the reaction of L-α-glycerophosphate and oxygen to form dihydroxyacetone phosphate and hydrogen peroxide.

1 Claim, 4 Drawing Figures

A. **4,275,161** is the U.S. Patent number.

B. **June 23, 1981** is the issue date.

C. **Misaki** is the last name of the inventor who is listed first.

C. **et al** indicates that there are other inventors.

D. **Process for the Manufacture of L-α-Glycerophosphate Oxidase** is the title describing the claimed invention.

D. The patent shows the name and city of residence of each of the **Inventors.** Unassigned patents show the full address of the Inventors.

D. **Assignee** refers to a company, organization or individual to which the inventors' rights to a patent are assigned. The name and city are shown.

D. **59,583** is the number given to the application, which was filed on **July 20, 1979.**

E. **Foreign Application Priority Data** indicates corresponding applications which were filed in other countries, gives the filing date and foreign application number. By fulfilling certain requirements, an applicant filing in the U.S. may be entitled to the benefit of the filing date of a prior application in a foreign country.

F. **Int. Cl...C12N 9/04** is the International Patent Classification.

F. **U.S. Cl...435/190, 435/822** are the two U.S. Classifications listed for this patent: Class 435, subclass 190 and Class 435, subclass 822. The classification listed in boldface on the patent is called the original classification (OR). The other is the cross-reference classification (XR). Every patent has one and only one original classification. If the disclosure of the patent falls into more than one subclass, additional copies of the patent are placed in those subclasses as cross-reference classifications.

F. The **Field of Search...** refers to the U.S. Classification where the Patent Examiner searched to compare the claimed subject matter to that disclosed in previous patents and articles.

G. **References Cited** refers to references which may be cited by the examiner and applicant to show the state-of-the-art or to indicate the prior art most closely related to the invention which is claimed in the application.

H. The Patent and Trademark Office (PTO) requires that the patent application include a brief **Abstract** of the technical disclosure in the specification. The purpose of the abstract is to enable the PTO and the public to determine quickly the nature and gist of the technical disclosure.

H. The front page also lists the number of **Claims** and the number of **Drawing Figures** in the patent. When appropriate, a representative drawing is also included on the front page of the patent.

Country Codes

The following country codes appear in Part 2D of the profiles.

AU - Australia
CA - Canada
CH - Switzerland
DE - West Germany
DK - Denmark
DT - West Germany
EN - United Kingdom (England)
ES - Spain
FI - Finland
FR - France
IL - Israel
IR - Iran
IT - Italy
JA - Japan
JP - Japan
SE - Sweden
SF - Finland
SU - Soviet Union
SW - Sweden
ZA - South Africa

Application Filing Date

The application filing date information as set forth in Parts 1 and 2A of the profiles is determined by taking all patents which issued between 1967 and 1981 and distributing them according to the year the application was filed in the PTO. Patents which were granted prior to 1967 are not included since the application date information for these patents is not in the data base. Also, applications which were filed but never issued (roughly 30% of the total filings), as well as those applications which were still pending as of December 31, 1981, are not included. Thus, only those applications which were filed and subsequently became patents with patent grant dates between 1967 and 1981 are included.

While the length of time between the patent application date and the patent grant date varies from patent to patent, the current average pendency is approximately 24 months. Clearly many applications filed in 1981 were still pending at the end of 1981, as were a number of those filed in 1980. Thus, application filing date data for these years are incomplete. While a small number of applications which were filed prior to 1980 were still pending, OTAF feels that the application date data prior to January 1980 are essentially complete. That is, the number shown for applications filed in the years prior to 1980 will not differ substantially with the passage of time, and this number is a true reflection of the number of applications filed in that year which have, and will, become patents. However, for the subsequent years, 1980 and 1981, that number will increase as more applications filed in those years become patents.

It should be remembered that the numbers reflect only those applications which became patents between 1967 and 1981. Thus, the column "pre-68" does not include all applications filed before 1968 but only those which issued in 1967 and subsequently. The graph of this information in Part 1 of each profile is limited to the years 1970-1979, years for which the application date data are essentially complete. Thus, the graphs are accurate representations of activity based on the application dates of subsequently issued patents.

Assignee

The term "assignee" refers to a company, organization or individual to which the inventor's rights to a patent are assigned. For the purpose of this publication, the assignee will, in all cases, refer to the assignee at the time the patent was granted. Approximately 80% of all U.S. patents are assigned when granted. By far, the largest portion of assignees are corporations.

Composite Total

Part 2C of each profile contains an alphabetical listing of assignees. In some instances, assignees are listed in more than one place due to variations in the printing of the name. These variations occur for a number of reasons, such as typographical errors, changes in company names, or differences in spacing or abbreviations. These variations also occur on the first pages of the patents which are shown in Part 3.

In Part 2B of each profile, which ranks assignees according to number of patents held, the number of patents listed for certain assignees may be a composite resulting from the combination of different titles which in fact signify identical assignees. An asterisk appears next to these totals. This will alert the reader that the particular assignee is listed under more than one title in Part C. The assignees making up composite groupings are listed below:

For: Purdue Research Foundation
See Also: Purdue Research Corporation

For: Hayashibara Biochemical Laboratories Incorporated
See Also: Kabushiki-Kaisha Hayashibara Seibutsu Kagaku Kenkyujo, Kabushiki Kaisha Hayashibara Selbutsukagaku Kenkyujo, and Hoyashibara Biochemical Laboratories Incorporated

For: Amano Pharmaceutical Co., Ltd.
See Also: Amano Seiyaku Kabushiki Kaisha

For: University of California, the Regents of
See Also: Regents of University of California

For: Stanford University, Leland Junior, The Board of Trustees of
See Also: Board of Trustees of the Leland Stanford University

For: Agence Nationale De La Valorisation de la Recherche (ANVAR)
See Also: Etablissment Public Det" Agence Nationale de Valorisation D

For: Novo Terapeutisk Laboratorium A/S
See Also: Nono Terapeutisk Laboratorium A/S

For: Meiji Seika Kaisha, Ltd
See Also: Miejr Seika Kaisha, Ltd

For: Institut Armand Frappier
See Also: L'Institut Armand-Frappier

For: University of California, The Regents of
See Also: Regents of University of California

* * *

APPENDIX B

PUBLICATIONS BY THE OFFICE OF TECHNOLOGY ASSESSMENT AND FORECAST

Copies of the publications listed below are available from:

National Technical Information Service (NTIS)
5285 Port Royal Rd.
Springfield, Virginia 22161
(703) 487-4650

When ordering from NTIS, please give the publication title and its "COM" or "PB" number. Most reports are also available on microfiche at a cost of $4.50 per report - domestic, $9.00 per report - foreign. Please note that prices are subject to change without notice.

- DESIGN PATENTS, 1983*
  PB 83-224063; Cost: Domestic - $15.50; Foreign - $31.00

  Compiles all available statistics on design patents granted in the U.S. Analyzes trends, and identifies the origins and ownership of U.S. design patents. Profiles major divisions within the design patent file, and identifies most active design areas. Includes selected patent front pages from each class in the Design Classification System.

- Industrial Robots: A Survey of Foreign and Domestic U.S. Patents, August 1982
  PB 82-169269; Cost: Domestic - $95.00; Foreign - $190.00

  Analyzes 212 U.S. patents disclosing industrial robot technology, including control & positioning, programming and motion systems, sensors, and grippers. Includes patent front pages and the first pages of the specification, arranged by technology. Discusses countries and companies most active in U.S. patenting of robotics. Includes microfiche containing the full text of 212 robot patents.

- Industrial Patent Activity in the United States, Parts 1 and 2, April 1983
  PB 83-213413; Cost: Domestic - $40.50; Foreign - $81.00

  This two-part publication gives information about the activity, ownership and national origin of patents granted by the U.S. Patent and Trademark Office. It identifies those U.S. and foreign organizations, e.g., corporations, government agencies and universities, which have been most active in the U.S. Patent System during the years 1969-1982. Yearly updates of this publication are expected. Each part, described on the next page, may be purchased separately.

*Also available from GPO. See page 287.

- Industrial Patent Activity in the United States, Part 1 - Time Series Profile by Company and Country of Origin, 1969-1982, April 1983
  PB 83-169094; Cost: Domestic - $25.50; Foreign - $51.00

  Part 1 shows the relative levels of patenting by all nations active in the U.S. Patent System and gives yearly counts of patents attributed to corporate, government and unaffiliated, e.g., "independent" inventors. It identifies companies having 10 or more patents in the 1969-1982 period, and ranks them in terms of total 14-year patent receipts. Patent activity for each year is profiled by both patent grant date and patented application filing date.

- Industrial Patent Activity in the United States Part 2 - Alphabetical Listing by Company, 1969-1982, April 1983
  PB 83-169102; Cost: Domestic - $19.50; Foreign - $39.00

  Part 2 is an alphabetical list of more than 20,000 U.S. and foreign organizations receiving at least three patents during the period 1969-1982. Included for each organization is the total patent count for the 14-year period.

PATENT PROFILES

These publications survey the U.S. patent activity in specific areas of selected, high-interest technologies. Each profile:

- identifies the technology area examined
- illustrates its U.S. patent activity in graphic and tabular form
- lists the owners of patents granted in the technology from January 1969, giving the patent numbers and titles
- ranks owners holding the most patents in the area
- identifies independent inventors of patents granted from January 1975, giving patent numbers, titles and addresses

- PATENT PROFILES - Biotechnology: 1982 Update, September 1983*
  PB 83-240937; Cost: Domestic - $15.50; Foreign - $31.00

  Profiles the patent activity in six areas of biotechnology involving enzymes and microorganisms, their use in the synthesis of certain products, and their preparation or modification. Includes an analysis of legal decisions which have affected the patenting of biotechnology processes and products. Lists recent foreign patent documents which disclose genetic engineering. Includes front pages of recent patents and selected patents of interest. This publication includes a section which updates through 1982 the six biotechnology areas profiled in PATENT PROFILES -Biotechnology (PB-82-250820).

*Also available from GPO. See page 287.

- PATENT PROFILES - Microelectronics - II, January 1983*
PB 83-1326613; Cost: Domestic - $15.50; Foreign - $21.50

The second in the series of profiles on microelectronics, this publication covers two additional areas of the technology -- Digital Logic Circuits and Semiconductor Memories. A third section -- Speech Analysis and Synthesis -- examines an area dealing with a practical application of microelectronics technology. Includes front pages of 30 patents and briefly describes their particular significance in the art. Provides an analysis of organizational patenting patterns.

- PATENT PROFILES - Microelectronics-I, February 1981*
PB 81-179582, Cost: Domestic - $8.50 Foreign - $17.00

Profiles the patenting activity in two representative segments of microelectronics technology relating to integrated circuit structure and information processing devices, e.g., "CPU's." For patents issuing from 1/1980 to 10/1980, includes front pages, showing bibliographic information, an abstract of the disclosure, and an appropriate drawing. Includes information about references cited during the examination period.

- PATENT PROFILES-Solar Energy, January 1980*
PB 80-190010, Cost: Domestic - $6.50 Foreign - $13.00

Profiles the patenting activity in five areas of technology using energy provided by the sun and in three areas using energy derived from other natural sources, such as wind, tide, wave, and geothermal. A cumulative profile of the five solar areas illustrates the dramatic growth in this field.

- PATENT PROFILES-Synthetic Fuels, December 1979*
PB 80-128572, Cost: Domestic - $6.50 Foreign - $13.00

Profiles the patent activity in ten areas of synthetic fuel technology dealing with the conversion of solid carbonaceous material to liquid or gaseous hydrocarbons. Starting materials include coal, oil shale, bituminous sands, wood and organic wastes.

TECHNOLOGY ASSESSMENT AND FORECAST REPORTS

- Tenth Report, November 1981*
PB 82-215658; Cost: Domestic - $16.50; Foreign - $33.00

Updates the "Top 50" introduced in the Ninth Report. Reviews the U.S. patent activity of some of the largest European and Japanese foreign multinational corporations, over time, across technology and relative to one another. Provides an extensive review of the changing standards for computer software patentability, including the 1981 Supreme Court decision, and examines the impacts of such changes on a representative technology -- seismic data processing. Demonstrates, using aerospace technology patenting as an example, how the patent file can be used as a source for historical, technical or bibliographic data.

*Also available from GPO. See page 287.

- Ninth Report, March 1979*
  PB 293380; Cost: Domestic - $16.50; Foreign - $33.00

  Presents "Top 50" most active technologies in three categories -- Most Active, Fastest Growing, and Most Foreign-Active -- for each of three broad groupings of technology -- Chemical, Electrical and Mechanical. Examines trends in domestic patenting and independent inventor patenting. Includes an extensive review of patenting in "Ferrous Metal" technologies. Concludes with a discussion of two experiments in the transfer of "appropriate technology" to small businesses and developing countries.

- Eighth Report, December 1977*
  PB 276375; Cost: Domestic - $13.50; Foreign - $27.00

  Reviews U.S. patenting in the context of domestic vs. international patenting and analyzes the balance of patenting between the U.S. and other countries. Presents a study demonstrating the use of patents and the patent file as a unique technological resource. Concludes with an in-depth analysis of patent activity in geophysical exploration for hydrocarbons.

- Seventh Report, March 1977*
  PB 265792; Cost: Domestic - $18.00; Foreign - $36.00

  Reviews historical patenting and trademark registration trends, and includes the most extensive collection of historical U.S. patent data ever presented in a single publication. Uses data relating to patents granted by foreign nations for a study of invention sources. Uses pending patent application data for forecasting. Presents brief reviews of 16 technologies experiencing high overall or foreign patent activity. Concludes with the series' most comprehensive assessment of activity in a given technology, specifically in computer memories.

- Sixth Report, June 1976
  PB 254188; Cost: Domestic - $16.50; Foreign - $33.00

  Reviews 15 technologies with unusually high foreign activity and 22 technologies with high overall activity. Updates the 1973 reports on patent activity in solar energy, and adds reports on the use of waste material or wind for energy generation. Presents comparisons of patenting to R&D expenditures and R&D manpower allocations in six selected industries. The report concludes with a review of six most often cited patents in 1975, five U.S. and one foreign patent.

- Fifth Report, August 1975
  COM 75-11142; Cost: Domestic - $15.00; Foreign - $30.00

  Reviews 60 technological areas, not previously reported on, which experience a high level of overall activity or of foreign activity. Presents patent activity data in categories corresponding to 36 Product Fields of the Standard Industrial Classification System.

*Also available from GPO. See page 287.

- Fourth Report: A Review of Patent Ownership, January 1975
  COM 75-10050; Cost: Domestic - $13.50; Foreign - $27.00

  Identifies the 73 corporations and government agencies which received 500 or more patents during the five year period 1969-1973, and reviews and compares their patent activity across the spectrum of technology. Also reviews in terms of patent ownership, the patent activity during the same period, in nuclear energy technology and oil shale and coal gasification technology.

- Third Report, June 1974
  COM 74-11383; Cost: Domestic - $16.50; Foreign - $33.00

  Presents an overview of the technological activity, across all technologies, of a group of selected foreign countries and a group of selected U.S. states. Extends energy area treatments to include oil shale and coal gasification technologies. Reviews additional technological areas having a high level of overall activity.

- Early Warning Report, December 1973
  COM 74-10150; Cost: Domestic - $22.50; Foreign - $45.00

  Spotlights those technological areas experiencing a high level of overall activity or of foreign activity. Reviews patent activity in a number of energy areas, including nuclear, solar, geothermal, and tide, wind and wave energy.

- Initial Publication, May 1973
  COM 73-10767; Cost: Domestic - $12.00; Foreign - $24.00

  Describes OTAF program and gives sample reports on 24 wide ranging areas of technology in varying levels of detail.

---

*NOTE: The following publications may also be obtained from:

The Superintendent of Documents
U.S. Government Printing Office
Washington, DC 20402

Their identification numbers and costs are:

- Seventh Report, 003-004-00542-4; Cost: $4.25
- Eighth Report, 003-004-00550-5; Cost: $3.75
- Ninth Report, 003-004-00559-9; Cost: $4.00
- Tenth Report, 003-004-00580-7; Cost: $7.00
- PATENT PROFILES-Synthetic Fuels, 003-004-00566-1; Cost: $5.50
- PATENT PROFILES-Solar Energy, 003-004-00568-8; Cost: $5.50
- PATENT PROFILES-Microelectronics - I, 003-004-00574-2; Cost: $7.00
- PATENT PROFILES-Biotechnology: 1982 Update, (Order number and cost not available at time of printing)
- PATENT PROFILES-Microelectronics - II, 003-004-00595-5; Cost: $6.50
- DESIGN PATENTS, (Order number and cost not available at time of printing)

APPENDIX C

CUSTOM PATENT REPORTS FROM THE OFFICE OF TECHNOLOGY ASSESSMENT AND FORECAST

OTAF's computerized base of data relating to the U.S. patent file includes, at present:

- all subclasses of the U.S. Patent Classification (USPC) System, and the classification within this System of all U.S. patents, including utility and design patents
- the relationship of all utility subclasses in the U.S. Patent Classification System to 55 Product Fields and combinations of Product Fields in the Standard Industrial Classification (SIC) System
- the category of ownership at time of issue, e.g., U.S. government, foreign government, U.S. corporation, foreign corporation, U.S. individual, foreign individual (for utility patents issued since 1963 and for design patents issued since 1977)
- the country or state of residence of the inventor (for utility patents issued since 1963 and for design patents issued since 1977)
- the date the application for patent was filed in the U.S. (for utility patents issued since 1967 and for design patents issued since 1977)
- the specific (i.e., named) ownership of all patents which, at time of issue, were owned by an organization (for utility patents issued since 1969 and for design patents issued since 1977)
- the patent title (for utility patents issued since 1969 and for design patents issued since 1977)
- the name and address of inventors of unassigned patents (for utility patents issued since 1975 and for design patents issued since 1977)
- the field of search and references cited in the examination leading to the patent grant (for utility patents issued since 1975 and for design patents issued since 1977)

Custom Patent Reports

Data can be retrieved on the basis of any one or any combination of the factors listed above, manipulated on most any given basis and presented in a number of formats, e.g., lists, tables, graphs, charts, etc. This flexibility is illustrated in OTAF publications, such as Technology Assessment and Forecast Reports and PATENT PROFILES, and by the following excerpts from custom reports. Samples of standard format custom reports are available from OTAF.

Technology Profile Report

This standard format multi-part report uses most of the elements in OTAF's data base to provide a detailed patent profile of a specific technology or subject area. Information provided includes rate of patenting, origin of patenting, type of assignment, specific assignment, patent numbers and their titles, and names and addresses of "independent" inventors. There are four parts (parts A, B, C, & D) which comprise a complete report. Part A includes patenting activity percentages, and time-series distribution by general assignment category and origin of patents, Part B is a ranked listing of organizations which shows counts of patents granted by both year of application filing and grant date, Part C lists organizations alphabetically with patent numbers and titles, Part D gives the name and address of the inventors of patents assigned to individuals or unassigned at time of issue, and includes patent numbers and titles. This report can be tailored to specific needs. This PATENT PROFILES publication is itself an example of the data presented in a Technology Profile Report.

Organizational Profile Report

Pages 292-293 show excerpts from another of OTAF's standard format custom reports, the Organizational Profile. This report profiles patent activity across all of the classes and subclasses of the USPC System, and gives specific patent numbers and titles. The reports may be limited to specific classifications. Pages from a report on Atlantic Research Corporation are given as an example. This type of report can be prepared on the patents of any organization or grouping of organizations, or on the patents granted to the residents of any state or country or grouping of states or countries.

Multi-Corporate Patent Activity Profile

Like the above described Organizational Profile, this report also profiles patent activity across the classes and subclasses of the USPC System. Multi-Corporate Profiles may be limited to specific classifications. In this report, the activity of up to eight organizations is profiled simultaneously, facilitating comparisons between organizations. Unlike the Organizational Profile, no patent numbers or patent titles are given. A sample page from a report on AT&T, Bell Labs, Teletype and Western Electric is shown on page 294.

Enterprise Patenting Report

Page 295 shows an excerpt from a standard format Enterprise Patenting Report on AT&T. Here, the number of patents per year per class is given for a parent company and its patenting subsidiaries. An optional part of this report lists all of the organizations considered under the enterprise name and indicates the total number of patents held by each of them.

SIC Product Field Reports

On page 296 is a listing of Standard Industrial Classification (SIC) Product Fields for which a concordance exists with utility subclasses of the USPC System. Custom patent reports, such as the Technology Profile Report, can be prepared for any of these Product Fields.

Other Standard Format Reports

OTAF has developed the flexibility to prepare other standard format reports designed to meet the needs of a large number of users. These include:

- Corporate Patenting Report where patents of the designated organization are given in numerical order,
- Search and Citation Report which includes, for a designated classification or group of classifications, the number and origin of the references cited during the examination period leading to the grant of the patent, the U.S. references most frequently cited and the owner (assignee) of patents most frequently cited, and
- Mailing Labels for inventors of unassigned patents.

How to Obtain OTAF Custom Reports

Contact OTAF to discuss the type of information you need. OTAF will assist you in determining the report content and format that best suits your needs, and provide you with a free estimate of its cost. If the terms are acceptable to you, the report will be prepared and forwarded to you, usually within seven working days.

Costs

All Custom Reports are provided on a cost reimbursable basis and billed through the National Technical Information Service to which payment is made by check, or charged to an NTIS deposit account or major credit card. These costs may vary widely -- from as low as $75.00 for some forms of our standard format reports, to several thousand dollars for complex or large scale treatments. The preparation of specially tailored reports, requiring extensive professional time, programming and/or computer time, is subject to the availability of OTAF resources. Cost estimates for specifically requested custom reports will be provided prior to report preparation.

Whom to Contact

Inquiries concerning OTAF publications/services are invited and should be directed to:

Office of Technology Assessment and Forecast
U.S. Patent and Trademark Office
Washington, D.C. 20231
Phone: (703) 557-2982

-SAMPLE-

ORGANIZATIONAL PROFILE

EXPLANATION OF DATA

This report profiles patents falling into a particular "category" by the U.S. patent classifications into which those patents have been placed. The "category" may be a specific ownership (e.g., a specific corporation or government agency, etc.) or a country or state of inventor residence. The report may show patents in original classifications only (OR) or in original plus any appropriate cross-reference classifications (OR + XR).

Each major patent classification (class) is identified by its title. Then, for each of the subclasses within that class where patents from the "category" have been placed, the following are given:

--TOTAL (number of "category" patents in subclass)
--OR (number of TOTAL which are original classifications)
--XR* (number of TOTAL which are cross-reference classifications)
--PCT OF TOTAL OR (number of OR's in subclass divided by number of OR's in "category" x 100)
--PCT OF ALL (OR + XR*) (number of OR's + number of XR's* in subclass divided by number of OR's + XR's* in "category" x 100)
* Number will be zero if report is limited to OR's.

The above figures are then given for the entire class. Also given are the patent numbers of the "category" patents in each subclass. The type of classification (OR or XR) assigned to each patent is shown in parentheses following the patent number.

For patents issuing in 1969 and subsequently, the patent titles are given. (Note: any symbols in a patent title which are not available on the computer printer are spelled out, e.g., β is shown as BETA. Superscripts and subscripts are indicated by encloser between upwardly or downwardly facing slashes, e.g., H_2O is shown as H/2\O and Y^2X is shown as Y\2/X.)

The patents included in the report are those which according to the data of record in the OTAF computer data base, fall within the category covered in the report. These category data are recorded at the time of patent issue and are essentially accurate. However, any patent listing should not be considered to be inclusive of all relevant patents, nor exclusive of all non-relevant patents.

-SAMPLE-

CLASS 423 - CHEMISTRY, INORGANIC

TOTAL CLASS 423	TOTAL	3	(OR)	1	(XR)	2	PCT OF TOTAL OR	2.8	PCT OF ALL (OR+XR)	1.7

CLASS 424 - DRUG, BIO-AFFECTING AND BODY TREATING COMPOSITIONS

SUBCLASS 366	TOTAL	1	(OR)	1	(XR)	0	PCT OF TOTAL OR	2.8	PCT OF ALL (OR+XR)	.6

3840667 (OR) - OXYGEN-CONTAINING ATMOSPHERES

TOTAL CLASS 424	TOTAL	1	(OR)	1	(XR)	0	PCT OF TOTAL OR	2.8	PCT OF ALL (OR+XR)	.6

CLASS 427 - COATING PROCESSES

SUBCLASS 122	TOTAL	1	(OR)	0	(XR)	1	PCT OF TOTAL OR	0.0	PCT OF ALL (OR+XR)	.6

4029844 (XR) - ROCKET NOZZLE COMPRISING PYROLYTIC GRAPHITE-SILICON CARBIDE INSERTS

SUBCLASS 219	TOTAL	1	(OR)	0	(XR)	1	PCT OF TOTAL OR	0.0	PCT OF ALL (OR+XR)	.6

4029844 (XR) - ROCKET NOZZLE COMPRISING PYROLYTIC GRAPHITE-SILICON CARBIDE INSERTS

SUBCLASS 223	TOTAL	1	(OR)	0	(XR)	1	PCT OF TOTAL OR	0.0	PCT OF ALL (OR+XR)	.6

3738906 (XR) - PYROLYTIC GRAPHITE-SILICON CARBIDE MICROCOMPOSITES

SUBCLASS 228	TOTAL	3	(OR)	1	(XR)	2	PCT OF TOTAL OR	2.8	PCT OF ALL (OR+XR)	1.7

3924034 (OR) - PROCESS OF MAKING PYROLYTIC GRAPHITE-SILICON CARBIDE MICROCOMPOSITES
3925133 (XR) - METHOD FOR MAKING REINFORCED PYROLYTIC GRAPHITE-SILICON CARBIDE MICROCOMPOSITES
4029844 (XR) - ROCKET NOZZLE COMPRISING PYROLYTIC GRAPHITE-SILICON CARBIDE INSERTS

SUBCLASS 249	TOTAL	4	(OR)	0	(XR)	4	PCT OF TOTAL OR	0.0	PCT OF ALL (OR+XR)	2.3

3738906 (XR) - PYROLYTIC GRAPHITE-SILICON CARBIDE MICROCOMPOSITES
3877080 (XR) - ACICULAR SILICON CARBIDE DISPERSION IN PYROLYTIC GRAPHITE MATRIX FOR USE IN BIOMEDICAL IMPLANTS
3924034 (XR) - PROCESS OF MAKING PYROLYTIC GRAPHITE-SILICON CARBIDE MICROCOMPOSITES
4029844 (XR) - ROCKET NOZZLE COMPRISING PYROLYTIC GRAPHITE-SILICON CARBIDE INSERTS

SUBCLASS 399	TOTAL	1	(OR)	0	(XR)	1	PCT OF TOTAL OR	0.0	PCT OF ALL (OR+XR)	.6

3924034 (XR) - PROCESS OF MAKING PYROLYTIC GRAPHITE-SILICON CARBIDE MICROCOMPOSITES

TOTAL CLASS 427	TOTAL	11	(OR)	1	(XR)	10	PCT OF TOTAL OR	2.8	PCT OF ALL (OR+XR)	6.4

CLASS 428 - STOCK MATERIAL OR MISCELLANEOUS ARTICLES

SUBCLASS 37	TOTAL	1	(OR)	1	(XR)	0	PCT OF TOTAL OR	2.8	PCT OF ALL (OR+XR)	.6

3853586 (OR) - TAPERED CARBON/PYROLYTIC GRAPHITE COMPOSITE MATERIAL

-SAMPLE-

OTAF CUSTOM REPORT
MULTI-CORPORATE PATENT ACTIVITY PROFILE - (1969 - 1982)

	AT+T TOTAL	AT+T PCT	BELL LABS TOTAL	BELL LABS PCT	TELETYPE TOTAL	TELETYPE PCT	WESTERN ELEC TOTAL	WESTERN ELEC PCT
CLASS 179 - TELEPHONY								
SUBCLASS 156 A			2	.0				
SUBCLASS 157			1	.0				
SUBCLASS 159			1	.0				
SUBCLASS 164			1	.0				
SUBCLASS 167			1	.0				
SUBCLASS 170 NC			12	.2				
SUBCLASS 170 D			8	.1				
SUBCLASS 170 G			3	.1				
SUBCLASS 170 R			6	.1				
SUBCLASS 170 T			4	.1				
SUBCLASS 170.2			23	.4				
SUBCLASS 170.6			5	.1				
SUBCLASS 170.8			2	.0				
SUBCLASS 175			2	.0				
SUBCLASS 175.2 A			4	.1				
SUBCLASS 175.2 B			3	.1			2	.1
SUBCLASS 175.2 C	2	4.1	7	.1				
SUBCLASS 175.2 D			1	.0				
SUBCLASS 175.2 R			17	.3			3	.2
SUBCLASS 175.21			1	.0				
SUBCLASS 175.23			1	.0				
SUBCLASS 175.3 A	3	6.1	2	.0				
SUBCLASS 175.3 F			5	.1				
SUBCLASS 175.3 R	1	2.0	21	.4				
SUBCLASS 175.3 S			2	.0				
SUBCLASS 175.31 E			1	.0				
SUBCLASS 175.31 R			11	.2				
SUBCLASS 178	1	2.0	2	.0			1	.1
SUBCLASS 179			1	.0				
SUBCLASS 180			1	.0				
SUBCLASS 189 R			1	.0				
TOTAL CLASS 179	40	81.6*	836	14.0*	1	.3*	35	2.5*
CLASS 181 - ACOUSTICS								
SUBCLASS 171			1	.0				
SUBCLASS 175			1	.0				
TOTAL CLASS 181		*	2	.0*		*		*
CLASS 182 - FIRE ESCAPES, LADDERS, SCAFFOLDS								
SUBCLASS 221							1	.1
TOTAL CLASS 182		*		*		*	1	.1*

-SAMPLE-

ENTERPRISE PATENTING - AMERICAN TELEPHONE+TELEGRAPH INC.

PATENTS GRANTED - BY CLASS BY YEAR

CLASS	1969	1970	1971	1972	1973	1974	1975	1976	1977	1978	1979	1980	1981	1982	TOTAL
320	0	0	1	0	1	0	0	0	1	0	0	0	0	0	3
323	3	3	8	7	3	0	1	4	1	3	1	0	1	5	40
324	33	34	21	17	13	9	8	11	13	5	7	11	10	5	197
328	9	19	11	7	9	8	6	4	5	1	3	3	1	2	88
329	3	2	1	3	1	3	0	4	1	0	0	0	1	0	19
330	23	20	17	19	11	12	14	7	3	6	4	6	3	3	148
331	13	17	26	8	7	6	5	3	8	1	1	1	5	1	102
332	18	9	10	12	6	2	5	1	3	1	1	3	1	0	72
333	27	39	53	24	38	11	12	11	4	7	8	7	3	11	255
335	7	2	5	7	5	4	1	5	3	1	1	3	2	1	47
336	5	1	0	3	0	0	0	0	0	0	0	0	1	0	10
337	1	0	1	0	3	0	1	0	3	1	0	0	0	0	10
338	1	1	2	1	0	1	0	1	0	0	0	0	2	1	10
339	6	6	12	7	6	8	4	9	9	15	6	16	20	16	140
340	15	23	22	25	13	12	12	12	15	14	7	6	7	8	191
343	4	10	8	7	2	0	5	2	3	4	4	6	6	6	67
346	1	2	3	5	3	1	3	6	2	0	0	1	0	0	27
350	36	34	40	37	20	29	18	9	18	28	20	21	18	8	336
351	0	0	0	0	0	0	0	0	0	0	0	0	0	1	1
353	0	1	1	0	1	2	0	0	0	0	0	0	0	0	5
354	0	0	0	3	1	0	0	0	0	0	0	1	1	0	6
355	0	0	4	2	0	2	2	0	1	0	0	3	0	0	14
356	0	6	3	8	7	6	4	5	7	3	2	4	6	5	66
357	5	5	13	10	7	14	13	14	7	12	13	17	15	11	156
358	5	23	17	20	17	12	7	17	9	10	2	9	8	0	156
360	2	5	1	4	1	1	2	4	4	0	2	0	2	0	28
361	15	3	11	13	1	7	5	2	4	3	6	7	12	6	95
362	0	0	0	0	2	0	0	0	0	0	0	0	0	0	2
363	7	3	4	5	6	6	7	5	6	3	2	2	4	2	62
364	16	20	58	30	28	14	17	16	13	13	9	15	16	17	282
365	62	42	35	50	31	25	5	7	16	6	11	16	9	13	328
366	0	0	0	0	1	0	0	0	0	1	0	0	0	0	2
367	1	1	0	1	2	1	1	1	0	0	0	0	1	0	9
368	0	0	1	1	2	0	0	0	0	0	0	0	0	0	4
369	0	0	0	0	0	3	0	1	0	0	0	0	0	0	4
370	17	27	19	23	30	18	15	11	16	11	10	8	12	9	226
371	17	11	10	9	11	3	6	6	4	3	1	0	5	3	89
372	24	27	31	25	29	15	7	9	4	5	5	6	4	6	197
373	0	0	0	0	0	1	0	0	0	0	0	0	0	0	1
374	1	1	3	0	0	1	0	0	1	0	0	1	0	0	8
375	10	16	23	16	16	4	11	10	15	3	1	6	7	10	148
376	0	0	0	0	0	0	0	0	0	0	0	0	0	1	1
377	4	5	8	5	2	6	2	4	1	1	0	2	0	0	40
378	0	0	0	0	4	0	1	0	2	0	1	3	2	2	15
400	0	1	0	4	3	3	6	6	1	3	5	3	1	1	37
403	0	0	0	0	0	1	0	0	0	0	1	1	1	0	4
405	2	1	0	0	0	0	0	0	0	0	0	0	0	0	3
406	0	1	0	0	1	0	0	0	0	0	0	0	1	1	4
408	0	1	0	0	0	0	0	0	0	0	0	0	0	0	1
409	1	0	1	0	0	0	0	0	0	0	0	0	0	1	3
411	0	0	0	0	0	1	0	0	0	0	0	0	0	0	1
414	2	3	5	1	2	0	1	0	1	3	0	1	1	1	21
417	0	0	1	0	0	1	0	1	1	0	0	0	0	0	4
418	0	0	0	0	0	0	0	0	1	0	0	0	0	0	1
419	0	0	0	0	1	0	0	0	0	0	0	2	1	0	4

STANDARD INDUSTRIAL CLASSIFICATION PRODUCT FIELDS

Product Fields	SIC Code
FOOD AND KINDRED PRODUCTS	20
TEXTILE MILL PRODUCTS	22
CHEMICALS AND ALLIED PRODUCTS	28
Chemicals, Except Drugs & Medicines	281, 282, 284-289
Basic Industrial Inorganic & Organic Chemistry	281, 286
Industrial Inorganic Chemistry	281
Industrial Organic Chemistry	286
Plastics Materials & Synthetic Resins	282
Agricultural Chemicals	287
All Other Chemicals	284, 285, 289
Soaps, Detergents, Cleaners, Perfumes, Cosmetics & Toiletries	284
Paints, Varnishes, Lacquers, Enamels, & Allied Products	285
Miscellaneous Chemical Products	289
Drugs and Medicines	283
PETROLEUM & NATURAL GAS EXTRACTION & REFINING	13, 29
RUBBER & MISCELLANEOUS PLASTICS PRODUCTS	30
STONE, CLAY, GLASS AND CONCRETE PRODUCTS	32
PRIMARY METALS	33, 3462, 3463
Primary Ferrous Products	331, 332, 3399, 3462
Primary & Secondary Non-Ferrous Metals	333-336, 339 (except 3399), 3463
FABRICATED METAL PRODUCTS	34 (except 3462, 3463, 348)
MACHINERY, EXCEPT ELECTRICAL	35
Engines & Turbines	351
Farm & Garden Machinery & Equipment	352
Construction, Mining & Material Handling Machinery & Equipment	353
Metal Working Machinery & Equipment	354
Office Computing & Accounting Machines	357
Other Machinery, Except Electrical	355, 356, 358, 359
Special Industry Machinery, Except Metal Working Machinery	355
General Industrial Machinery & Equipment	356
Refrigeration & Service Industry Machinery	358
Miscellaneous Machinery, Except Electrical	359
ELECTRICAL AND ELECTRONIC MACHINERY, EQUIPMENT AND SUPPLIES	36, 3825
Electrical Equipment, Except Communication Equipment	361-364, 369, 3825
Electrical Transmission & Distribution Equipment	361, 3825
Electrical Industrial Apparatus	362
Other Electrical Machinery, Equipment & Supplies	363, 364, 369
Household Appliances	363
Electrical Lighting & Wiring Equipment	364
Miscellaneous Electrical Machinery, Equipment & Supplies	369
Communication Equipment & Electronic Components	365-367
Radio & Television Receiving Equipment Except Communication Types	365
Electronic Components & Accessories & Communication Equipment	366-367
TRANSPORTATION EQUIPMENT	37, 348
Motor Vehicles & Other Transportation Equipment, Except Aircraft	348, 371, 373-376, 379
Motor Vehicles & Motor Vehicle Equipment	371
Guided Missiles & Space Vehicles & Parts	376
Other Transportation Equipment	373-375, 379 (except 3795)
Ship & Boat Building & Repairing	373
Railroad Equipment	374
Motorcycles, Bicycles & Parts	375
Miscellaneous Transportation Equipment	379 (except 3795)
Ordnance Except Missiles	348, 3795
Aircraft & Parts	372
PROFESSIONAL & SCIENTIFIC INSTRUMENTS	38 (except 3825)

APPENDIX D

ACKNOWLEDGMENTS

Patent and Trademark Office contributors to this publication are listed below. Special thanks are extended to Patent and Trademark Office professional and technical personnel whose continuing input to the Technology Assessment and Forecast program is indispensable.

TECHNOLOGY ASSESSMENT AND FORECAST STAFF

John F. Terapane, Ph.D., Director
Jane S. Myers, Program Director
Mary Ellen Mogee, Ph.D., Program Analyst
James A. Peterson, Systems Analyst
Susan B. Rifkin, Senior Analyst
James Jeffrey Franklin, Analyst
Margaret M. Gilbert, Data Control Technician
Deneise S. Boyd, Secretary
Judy Dickie, Secretary

PRINCIPAL TECHNOLOGY ANALYST FOR THIS PUBLICATION

Ray Penland, Ph.D., Primary Examiner

COORDINATORS FOR THIS PUBLICATION

Jane S. Myers, Program Director, OTAF
Susan B. Rifkin, Senior Analyst, OTAF

COMPUTER - GENERATED DATA AND GRAPHICS

James A. Peterson, Systems Analyst, OTAF
Margaret M. Gilbert, Data Control Technician, OTAF

CONSULTANTS

William S. Lawson, Administrator for Documentation
Thomas Wiseman, Primary Examiner
Gerald Brigance, Primary Examiner